Canon

G4010 series

Online Manual

Basic Operation
Network
Handling Paper, Originals, Ink Tanks, etc.
Maintenance
Overview of the Machine
Information about Paper
Printing
Copying
Scanning
Faxing
Frequently Asked Questions
List of Support Code for Error

English

Contents

Using Online Manual. 11

Symbols Used in This Document. 12

Touch-enabled Device Users (Windows). 13

Trademarks and Licenses. 14

Basic Operation. 28

Printing Photos from a Computer. 29

Printing Photos from a Smartphone/Tablet. 33

Copying. 36

Faxing. 40

Network. 42

Restrictions. 44

Network Connection Tips. 46

Default Network Settings. 47

Another Printer Found with Same Name. 49

Connects to Another Computer via LAN/Changes from USB to LAN Connection. 50

Printing Network Settings. 51

Reconfiguration Method of Wireless LAN Connection. 55

Handling Paper, Originals, Ink Tanks, etc.. 56

Loading Paper. 57

Loading Plain Paper / Photo Paper. 58

Loading Envelopes. 62

Loading Originals. 66

Where to Load Originals. 67

Loading Originals on the Platen Glass. 68

Loading Documents in the ADF (Auto Document Feeder). 69

Loading Based on Use. 70

Supported Originals. 73

Refilling Ink Tanks. 75

Refilling Ink Tanks. 76

Checking Ink Level. 85

Ink Tips. 86

Maintenance. 87
If Printing Is Faint or Uneven. 88
Maintenance Procedure. 89
Printing the Nozzle Check Pattern. 92
Examining the Nozzle Check Pattern. 93
Cleaning the Print Head. 94
Deep Print Head Cleaning. 95
Aligning the Print Head. 96
Cleaning. 99
Cleaning Paper Feed Rollers. 100
Cleaning Inside the Printer (Bottom Plate Cleaning). 101
Overview. 103
Safety. 104
Safety Precautions. 105
Regulatory Information. 106
WEEE (EU&EEA). 111
Handling Precautions. 121
Legal Restrictions on Scanning/Copying. 122
Transporting Your Printer. 123
When Repairing, Lending, or Disposing of the Printer. 125
Keeping Print Quality High. 126
Main Components and Their Use. 127
Main Components. 128
Front View. 129
Rear View. 131
Inside View. 132
Operation Panel. 133
Power Supply. 135
Confirming that the Power Is On. 136
Turning the Printer On and Off. 137
Checking the Power Plug/Power Cord. 139
Unplugging the Printer. 140
LCD and Operation Panel. 141

Entering Numbers, Letters, and Symbols. 143
Changing Settings. 146
Changing Printer Settings from Your Computer (Windows). 147
Changing the Print Options. 148
Registering a Frequently Used Printing Profile. 149
Setting the Ink Tank to be Used. 151
Managing the Printer Power. 152
Changing the Printer Operation Mode. 154
Changing Settings from Operation Panel. 156
Changing Settings from Operation Panel. 157
Setting Items on Operation Panel. 158
FAX settings. 159
Print settings. 164
LAN settings. 165
Dev. user settings. 168
Language selection. 170
Firmware update. 171
Feed settings. 172
Reset setting. 173
Ink notification set.. 175
Web service setup. 177
System information. 178
ECO settings. 179
Quiet setting. 180
Specifications. 181
Information about Paper. 186
Supported Media Types. 187
Paper Load Limit. 189
Unsupported Media Types. 191
Handling Paper. 192
Printing. 193
Printing from Computer. 194
Printing from Application Software (Windows Printer Driver). 195

Basic Printing Setup. 196
Paper Settings on the Printer Driver and the Printer (Media Type). 199
Paper Settings on the Printer Driver and the Printer (Paper Size). 200
Various Printing Methods. 201
Setting a Page Size and Orientation. 202
Setting the Number of Copies and Printing Order. 203
Execute Borderless Printing. 205
Scaled Printing. 208
Page Layout Printing. 211
Tiling/Poster Printing. 213
Duplex Printing. 216
Setting Up Envelope Printing. 218
Printing on Postcards. 220
Overview of the Printer Driver. 222
Canon IJ Printer Driver. 223
Opening Printer Driver's Setup Screen. 224
Canon IJ Status Monitor. 225
Instructions for Use (Printer Driver). 227
Printer Driver Description. 229
Quick Setup Tab Description. 230
Main Tab Description. 236
Page Setup Tab Description. 241
Maintenance Tab Description. 252
Canon IJ Status Monitor Description. 254
Installing the MP Drivers. 257
Printing from Smartphone/Tablet. 258
Printing/Scanning with Wireless Direct. 259
Printing Using Operation Panel. 263
Printing Templates Such as Lined or Graph Paper. 264
Paper Settings. 267
Copying. 270
Making Copies. 271
Setting Items for Copying. 273

Scanning. 276
Scanning from Computer (Windows). 277
Scanning According to Item Type or Purpose (IJ Scan Utility). 278
IJ Scan Utility Features. 279
Scanning Easily (Auto Scan). 281
Scanning Documents and Photos. 282
Scanning Using Application Software (ScanGear). 283
What Is ScanGear (Scanner Driver)?. 284
Starting ScanGear (Scanner Driver). 286
Scanning in Basic Mode. 287
ScanGear (Scanner Driver) Screens. 290
Basic Mode Tab. 291
Advanced Mode Tab. 299
General Notes (Scanner Driver). 305
Scanning Tips. 307
Positioning Originals (Scanning from Computer). 308
Network Scan Settings. 311
Scanning Using Smartphone/Tablet. 315
Faxing. 316
Preparing for Faxing. 317
Connecting Telephone Line. 318
Setting Telephone Line Type. 322
Setting Receive Mode. 324
Setting Sender Information. 328
Registering Recipients. 333
Registering Recipients Using Operation Panel of Printer. 334
Registering Fax/Telephone Number of Recipients. 335
Registering Recipients in Group Dial. 338
Changing Registered Information. 341
Deleting Registered Information. 343
Printing List of Registered Destinations. 344
Registering Recipients Using Speed Dial Utility2 (Windows). 345
Starting Up Speed Dial Utility2. 346

Speed Dial Utility2 Dialog box. 347
Saving Registered Telephone Directory on Printer to Your Computer. 349
Registering a Fax/telephone Number Using Speed Dial Utility2. 350
Changing a Fax/telephone Number Using Speed Dial Utility2. 352
Deleting a Fax/telephone Number Using Speed Dial Utility2. 354
Changing Sender Information Using Speed Dial Utility2. 355
Registering/Changing Rejected Number Using Speed Dial Utility2. 356
Registering Telephone Directory Has been Saved on Your Computer to Printer. 357

Sending Faxes Using Operation Panel of Printer. 358

Sending Faxes by Entering Fax/Telephone Number. 359
Resending Faxes (Redialing Busy Number). 362
Setting Items for Sending Faxes. 364

Sending Faxes from Computer (Windows). 366

Sending a FAX (Fax Driver). 367
Creating an Address Book (Fax Driver). 370
Edit or Remove a Recipient from an Address Book (Fax Driver). 374
Search for a Recipient in an Address Book (Fax Driver). 377
Cannot Send Faxes from Computer. 379
How to Open the Setting Screen of the Fax Driver. 381
General Notes (Fax Driver). 383

Receiving Faxes. 384

Receiving Faxes. 385
Changing Paper Settings. 389
Substitute Reception in Printer's Memory. 391

Other Useful Fax Functions. 393

Document Stored in Printer's Memory. 394

Printing Document in Printer's Memory. 396
Deleting Document in Printer's Memory. 398

Frequently Asked Questions. 400

Network Settings and Common Problems. 402
Network Communication Problems. 404

Cannot Find Printer on Network. 405

Cannot Find Printer on Check Printer Settings Screen During Setup (Windows). 406

Cannot Find Printer on Check Printer Settings Screen During Wireless LAN Setup (Windows)-Checking Power Status. . . . 407
Cannot Find Printer on Check Printer Settings Screen During Wireless LAN Setup (Windows)-Checking PC Network Connection. . . . 408
Cannot Find Printer on Check Printer Settings Screen During Wireless LAN Setup (Windows)-Checking Printer's Wireless LAN Settings. . . . 409
Cannot Find Printer on Check Printer Settings Screen During Wireless LAN Setup (Windows)-Checking Wireless LAN Environment. . . . 410
Cannot Find Printer on Check Printer Settings Screen During Wireless LAN Setup (Windows)-Checking Printer's IP Address. . . . 412
Cannot Find Printer on Check Printer Settings Screen During Wireless LAN Setup (Windows)-Checking Security Software Settings. . . . 413
Cannot Find Printer on Check Printer Settings Screen During Wireless LAN Setup (Windows)-Checking Wireless Router Settings. . . . 414
Cannot Proceed beyond Printer Connection Screen. . . . 415
Cannot Find Printer while Using Wireless LAN. . . . 417
Network Connection Problems. . . . 420
Printer Suddenly Stopped Working for Some Reason. . . . 421
Network Key Unknown. . . . 426
Printer Cannot Be Used After Replacing Wireless Router or Changed Router Settings. . . . 428
Other Network Problems. . . . 430
Checking Network Information. . . . 431
Restoring to Factory Defaults. . . . 434
Printing Problems. . . . 435
Printing Does Not Start. . . . 436
Ink Is Not Coming Out. . . . 438
Ink Runs Out Fast. . . . 440
Paper Does Not Feed Properly/"No Paper" Error. . . . 441
Print Results Are Unsatisfactory. . . . 443
Paper Is Blank/Printing Is Blurry/Colors Are Wrong/White Streaks Appear. . . . 444
Colors Are Unclear. . . . 447
Lines Are Misaligned. . . . 449
Paper Is Smudged / Printed Surface Is Scratched. . . . 450
Vertical Line Next to Image. . . . 454
Scanning Problems (Windows). . . . 455
Scanning Problems. . . . 456
Scanner Does Not Work. . . . 457

ScanGear (Scanner Driver) Does Not Start. 458
Faxing Problems. 459
Problems Sending Faxes. 460
Cannot Send a Fax. 461
Errors Often Occur When You Send a Fax. 463
Problems Receiving Faxes. 464
Cannot Receive a Fax, Cannot Print a Fax. 465
Quality of Received Fax is Poor. 467
Telephone Problems. 468
Cannot Dial. 469
Telephone Disconnects During a Call. 470
Mechanical Problems. 471
Printer Does Not Turn On. 472
Power Shuts Off By Itself. 473
USB Connection Problems. 474
Cannot Communicate with Printer via USB. 475
Installation and Download Problems. 476
Cannot Install MP Drivers (Windows). 477
Updating MP Drivers in Network Environment (Windows). 479
Errors and Messages. 480
An Error Occurs. 481
Message (Support Code) Appears. 482
List of Support Code for Error. 489
List of Support Code for Error (Paper Jams). 491
1300. 492
Paper Is Jammed inside Printer. 494
1000. 498
1200. 499
1430. 500
1640. 504
1700. 505
1890. 506

2900. 507
2901. 508
4103. 509
5011. 510
5012. 511
5100. 512
5200. 513
5B00. 514
6000. 515

Using Online Manual

- Operating Environment
- Symbols Used in This Document
- Touch-enabled Device Users (Windows)
- Printing Online Manual
- Trademarks and Licenses
- Screenshots in This Manual

Symbols Used in This Document

⚠ Warning

Instructions that, if ignored, could result in death or serious personal injury caused by incorrect operation of the equipment. These must be observed for safe operation.

⚠ Caution

Instructions that, if ignored, could result in personal injury or material damage caused by incorrect operation of the equipment. These must be observed for safe operation.

Important

Instructions including important information. To avoid damage and injury or improper use of the product, be sure to read these indications.

Note

Instructions including notes for operation and additional explanations.

Basics

Instructions explaining basic operations of your product.

Note

- Icons may vary depending on your product.

Touch-enabled Device Users (Windows)

For touch actions, you need to replace "right-click" in this document with the action set on the operating system. For example, if the action is set to "press and hold" on your operating system, replace "right-click" with "press and hold."

Trademarks and Licenses

- Microsoft is a registered trademark of Microsoft Corporation.
- Windows is a trademark or registered trademark of Microsoft Corporation in the U.S. and/or other countries.
- Windows Vista is a trademark or registered trademark of Microsoft Corporation in the U.S. and/or other countries.
- Internet Explorer is a trademark or registered trademark of Microsoft Corporation in the U.S. and/or other countries.
- Mac, Mac OS, macOS, OS X, AirPort, App Store, AirPrint, the AirPrint logo, Safari, Bonjour, iPad, iPhone and iPod touch are trademarks of Apple Inc., registered in the U.S. and other countries.
- IOS is a trademark or registered trademark of Cisco in the U.S. and other countries and is used under license.
- Google Cloud Print, Google Chrome, Chrome OS, Chromebook, Android, Google Play, Google Drive, Google Apps and Google Analytics are either registered trademarks or trademarks of Google Inc.
- Adobe, Acrobat, Flash, Photoshop, Photoshop Elements, Lightroom, Adobe RGB and Adobe RGB (1998) are either registered trademarks or trademarks of Adobe Systems Incorporated in the United States and/or other countries.
- Bluetooth is a trademark of Bluetooth SIG, Inc., U.S.A. and licensed to Canon Inc.
- Autodesk and AutoCAD are registered trademarks or trademarks of Autodesk, Inc., and/or its subsidiaries and/or affiliates in the USA and/or other countries.

Note

- The formal name of Windows Vista is Microsoft Windows Vista operating system.

Copyright (c) 2003-2015 Apple Inc. All rights reserved.

Redistribution and use in source and binary forms, with or without modification, are permitted provided that the following conditions are met:

1. Redistributions of source code must retain the above copyright notice, this list of conditions and the following disclaimer.
2. Redistributions in binary form must reproduce the above copyright notice, this list of conditions and the following disclaimer in the documentation and/or other materials provided with the distribution.
3. Neither the name of Apple Inc. ("Apple") nor the names of its contributors may be used to endorse or promote products derived from this software without specific prior written permission.

THIS SOFTWARE IS PROVIDED BY APPLE AND ITS CONTRIBUTORS "AS IS" AND ANY EXPRESS OR IMPLIED WARRANTIES, INCLUDING, BUT NOT LIMITED TO, THE IMPLIED WARRANTIES OF MERCHANTABILITY AND FITNESS FOR A PARTICULAR PURPOSE ARE DISCLAIMED. IN NO EVENT SHALL APPLE OR ITS CONTRIBUTORS BE LIABLE FOR ANY DIRECT, INDIRECT, INCIDENTAL, SPECIAL, EXEMPLARY, OR CONSEQUENTIAL DAMAGES (INCLUDING, BUT NOT LIMITED TO, PROCUREMENT OF SUBSTITUTE GOODS OR SERVICES; LOSS OF USE, DATA, OR PROFITS; OR BUSINESS INTERRUPTION) HOWEVER CAUSED AND ON ANY THEORY OF LIABILITY, WHETHER IN CONTRACT, STRICT LIABILITY, OR TORT (INCLUDING NEGLIGENCE OR OTHERWISE) ARISING IN ANY WAY OUT OF THE USE OF THIS SOFTWARE, EVEN IF ADVISED OF THE POSSIBILITY OF SUCH DAMAGE.

Apache License

Version 2.0, January 2004

http://www.apache.org/licenses/

TERMS AND CONDITIONS FOR USE, REPRODUCTION, AND DISTRIBUTION

1. Definitions.

   "License" shall mean the terms and conditions for use, reproduction, and distribution as defined by Sections 1 through 9 of this document.

   "Licensor" shall mean the copyright owner or entity authorized by the copyright owner that is granting the License.

   "Legal Entity" shall mean the union of the acting entity and all other entities that control, are controlled by, or are under common control with that entity. For the purposes of this definition, "control" means (i) the power, direct or indirect, to cause the direction or management of such entity, whether by contract or otherwise, or (ii) ownership of fifty percent (50%) or more of the outstanding shares, or (iii) beneficial ownership of such entity.

   "You" (or "Your") shall mean an individual or Legal Entity exercising permissions granted by this License.

   "Source" form shall mean the preferred form for making modifications, including but not limited to software source code, documentation source, and configuration files.

   "Object" form shall mean any form resulting from mechanical transformation or translation of a Source form, including but not limited to compiled object code, generated documentation, and conversions to other media types.

   "Work" shall mean the work of authorship, whether in Source or Object form, made available under the License, as indicated by a copyright notice that is included in or attached to the work (an example is provided in the Appendix below).

   "Derivative Works" shall mean any work, whether in Source or Object form, that is based on (or derived from) the Work and for which the editorial revisions, annotations, elaborations, or other modifications represent, as a whole, an original work of authorship. For the purposes of this License, Derivative Works shall not include works that remain separable from, or merely link (or bind by name) to the interfaces of, the Work and Derivative Works thereof.

   "Contribution" shall mean any work of authorship, including the original version of the Work and any modifications or additions to that Work or Derivative Works thereof, that is intentionally submitted to Licensor for inclusion in the Work by the copyright owner or by an individual or Legal Entity authorized to submit on behalf of the copyright owner. For the purposes of this definition, "submitted" means any form of electronic, verbal, or written communication sent to the Licensor or its representatives, including but not limited to communication on electronic mailing lists, source code control systems, and issue tracking systems that are managed by, or on behalf of, the Licensor for the purpose of discussing and improving the Work, but excluding communication that is conspicuously marked or otherwise designated in writing by the copyright owner as "Not a Contribution."

   "Contributor" shall mean Licensor and any individual or Legal Entity on behalf of whom a Contribution has been received by Licensor and subsequently incorporated within the Work.

2. Grant of Copyright License. Subject to the terms and conditions of this License, each Contributor hereby grants to You a perpetual, worldwide, non-exclusive, no-charge, royalty-free, irrevocable

copyright license to reproduce, prepare Derivative Works of, publicly display, publicly perform, sublicense, and distribute the Work and such Derivative Works in Source or Object form.

3. Grant of Patent License. Subject to the terms and conditions of this License, each Contributor hereby grants to You a perpetual, worldwide, non-exclusive, no-charge, royalty-free, irrevocable (except as stated in this section) patent license to make, have made, use, offer to sell, sell, import, and otherwise transfer the Work, where such license applies only to those patent claims licensable by such Contributor that are necessarily infringed by their Contribution(s) alone or by combination of their Contribution(s) with the Work to which such Contribution(s) was submitted. If You institute patent litigation against any entity (including a cross-claim or counterclaim in a lawsuit) alleging that the Work or a Contribution incorporated within the Work constitutes direct or contributory patent infringement, then any patent licenses granted to You under this License for that Work shall terminate as of the date such litigation is filed.
4. Redistribution. You may reproduce and distribute copies of the Work or Derivative Works thereof in any medium, with or without modifications, and in Source or Object form, provided that You meet the following conditions:

    1. You must give any other recipients of the Work or Derivative Works a copy of this License; and
    2. You must cause any modified files to carry prominent notices stating that You changed the files; and
    3. You must retain, in the Source form of any Derivative Works that You distribute, all copyright, patent, trademark, and attribution notices from the Source form of the Work, excluding those notices that do not pertain to any part of the Derivative Works; and
    4. If the Work includes a "NOTICE" text file as part of its distribution, then any Derivative Works that You distribute must include a readable copy of the attribution notices contained within such NOTICE file, excluding those notices that do not pertain to any part of the Derivative Works, in at least one of the following places: within a NOTICE text file distributed as part of the Derivative Works; within the Source form or documentation, if provided along with the Derivative Works; or, within a display generated by the Derivative Works, if and wherever such third-party notices normally appear. The contents of the NOTICE file are for informational purposes only and do not modify the License. You may add Your own attribution notices within Derivative Works that You distribute, alongside or as an addendum to the NOTICE text from the Work, provided that such additional attribution notices cannot be construed as modifying the License.

    You may add Your own copyright statement to Your modifications and may provide additional or different license terms and conditions for use, reproduction, or distribution of Your modifications, or for any such Derivative Works as a whole, provided Your use, reproduction, and distribution of the Work otherwise complies with the conditions stated in this License.

5. Submission of Contributions. Unless You explicitly state otherwise, any Contribution intentionally submitted for inclusion in the Work by You to the Licensor shall be under the terms and conditions of this License, without any additional terms or conditions. Notwithstanding the above, nothing herein shall supersede or modify the terms of any separate license agreement you may have executed with Licensor regarding such Contributions.
6. Trademarks. This License does not grant permission to use the trade names, trademarks, service marks, or product names of the Licensor, except as required for reasonable and customary use in describing the origin of the Work and reproducing the content of the NOTICE file.
7. Disclaimer of Warranty. Unless required by applicable law or agreed to in writing, Licensor provides the Work (and each Contributor provides its Contributions) on an "AS IS" BASIS, WITHOUT WARRANTIES OR CONDITIONS OF ANY KIND, either express or implied, including, without

limitation, any warranties or conditions of TITLE, NON-INFRINGEMENT, MERCHANTABILITY, or FITNESS FOR A PARTICULAR PURPOSE. You are solely responsible for determining the appropriateness of using or redistributing the Work and assume any risks associated with Your exercise of permissions under this License.

8. Limitation of Liability. In no event and under no legal theory, whether in tort (including negligence), contract, or otherwise, unless required by applicable law (such as deliberate and grossly negligent acts) or agreed to in writing, shall any Contributor be liable to You for damages, including any direct, indirect, special, incidental, or consequential damages of any character arising as a result of this License or out of the use or inability to use the Work (including but not limited to damages for loss of goodwill, work stoppage, computer failure or malfunction, or any and all other commercial damages or losses), even if such Contributor has been advised of the possibility of such damages.
9. Accepting Warranty or Additional Liability. While redistributing the Work or Derivative Works thereof, You may choose to offer, and charge a fee for, acceptance of support, warranty, indemnity, or other liability obligations and/or rights consistent with this License. However, in accepting such obligations, You may act only on Your own behalf and on Your sole responsibility, not on behalf of any other Contributor, and only if You agree to indemnify, defend, and hold each Contributor harmless for any liability incurred by, or claims asserted against, such Contributor by reason of your accepting any such warranty or additional liability.
END OF TERMS AND CONDITIONS

---- Part 1: CMU/UCD copyright notice: (BSD like) -----

Copyright 1989, 1991, 1992 by Carnegie Mellon University

Derivative Work - 1996, 1998-2000

Copyright 1996, 1998-2000 The Regents of the University of California

All Rights Reserved

Permission to use, copy, modify and distribute this software and its documentation for any purpose and without fee is hereby granted, provided that the above copyright notice appears in all copies and that both that copyright notice and this permission notice appear in supporting documentation, and that the name of CMU and The Regents of the University of California not be used in advertising or publicity pertaining to distribution of the software without specific written permission.

CMU AND THE REGENTS OF THE UNIVERSITY OF CALIFORNIA DISCLAIM ALL WARRANTIES WITH REGARD TO THIS SOFTWARE, INCLUDING ALL IMPLIED WARRANTIES OF MERCHANTABILITY AND FITNESS. IN NO EVENT SHALL CMU OR THE REGENTS OF THE UNIVERSITY OF CALIFORNIA BE LIABLE FOR ANY SPECIAL, INDIRECT OR CONSEQUENTIAL DAMAGES OR ANY DAMAGES WHATSOEVER RESULTING FROM THE LOSS OF USE, DATA OR PROFITS, WHETHER IN AN ACTION OF CONTRACT, NEGLIGENCE OR OTHER TORTIOUS ACTION, ARISING OUT OF OR IN CONNECTION WITH THE USE OR PERFORMANCE OF THIS SOFTWARE.

---- Part 2: Networks Associates Technology, Inc copyright notice (BSD) -----

Copyright (c) 2001-2003, Networks Associates Technology, Inc

All rights reserved.

Redistribution and use in source and binary forms, with or without modification, are permitted provided that the following conditions are met:

* Redistributions of source code must retain the above copyright notice, this list of conditions and the following disclaimer.
* Redistributions in binary form must reproduce the above copyright notice, this list of conditions and the following disclaimer in the documentation and/or other materials provided with the distribution.
* Neither the name of the Networks Associates Technology, Inc nor the names of its contributors may be used to endorse or promote products derived from this software without specific prior written permission.

THIS SOFTWARE IS PROVIDED BY THE COPYRIGHT HOLDERS AND CONTRIBUTORS ``AS IS'' AND ANY EXPRESS OR IMPLIED WARRANTIES, INCLUDING, BUT NOT LIMITED TO, THE IMPLIED WARRANTIES OF MERCHANTABILITY AND FITNESS FOR A PARTICULAR PURPOSE ARE DISCLAIMED. IN NO EVENT SHALL THE COPYRIGHT HOLDERS OR CONTRIBUTORS BE LIABLE FOR ANY DIRECT, INDIRECT, INCIDENTAL, SPECIAL, EXEMPLARY, OR CONSEQUENTIAL DAMAGES (INCLUDING, BUT NOT LIMITED TO, PROCUREMENT OF SUBSTITUTE GOODS OR SERVICES; LOSS OF USE, DATA, OR PROFITS; OR BUSINESS INTERRUPTION) HOWEVER CAUSED AND ON ANY THEORY OF LIABILITY, WHETHER IN CONTRACT, STRICT LIABILITY, OR TORT (INCLUDING NEGLIGENCE OR OTHERWISE) ARISING IN ANY WAY OUT OF THE USE OF THIS SOFTWARE, EVEN IF ADVISED OF THE POSSIBILITY OF SUCH DAMAGE.

---- Part 3: Cambridge Broadband Ltd. copyright notice (BSD) -----

Portions of this code are copyright (c) 2001-2003, Cambridge Broadband Ltd.

All rights reserved.

Redistribution and use in source and binary forms, with or without modification, are permitted provided that the following conditions are met:

* Redistributions of source code must retain the above copyright notice, this list of conditions and the following disclaimer.
* Redistributions in binary form must reproduce the above copyright notice, this list of conditions and the following disclaimer in the documentation and/or other materials provided with the distribution.
* The name of Cambridge Broadband Ltd. may not be used to endorse or promote products derived from this software without specific prior written permission.

THIS SOFTWARE IS PROVIDED BY THE COPYRIGHT HOLDER ``AS IS'' AND ANY EXPRESS OR IMPLIED WARRANTIES, INCLUDING, BUT NOT LIMITED TO, THE IMPLIED WARRANTIES OF MERCHANTABILITY AND FITNESS FOR A PARTICULAR PURPOSE ARE DISCLAIMED. IN NO EVENT SHALL THE COPYRIGHT HOLDER BE LIABLE FOR ANY DIRECT, INDIRECT, INCIDENTAL, SPECIAL, EXEMPLARY, OR CONSEQUENTIAL DAMAGES (INCLUDING, BUT NOT LIMITED TO, PROCUREMENT OF SUBSTITUTE GOODS OR SERVICES; LOSS OF USE, DATA, OR PROFITS; OR BUSINESS INTERRUPTION) HOWEVER CAUSED AND ON ANY THEORY OF LIABILITY, WHETHER IN CONTRACT, STRICT LIABILITY, OR TORT (INCLUDING NEGLIGENCE OR OTHERWISE) ARISING IN ANY WAY OUT OF THE USE OF THIS SOFTWARE, EVEN IF ADVISED OF THE POSSIBILITY OF SUCH DAMAGE.

---- Part 4: Sun Microsystems, Inc. copyright notice (BSD) -----

Copyright c 2003 Sun Microsystems, Inc., 4150 Network Circle, Santa Clara, California 95054, U.S.A. All rights reserved.

Use is subject to license terms below.

This distribution may include materials developed by third parties.

Sun, Sun Microsystems, the Sun logo and Solaris are trademarks or registered trademarks of Sun Microsystems, Inc. in the U.S. and other countries.

Redistribution and use in source and binary forms, with or without modification, are permitted provided that the following conditions are met:

* Redistributions of source code must retain the above copyright notice, this list of conditions and the following disclaimer.
* Redistributions in binary form must reproduce the above copyright notice, this list of conditions and the following disclaimer in the documentation and/or other materials provided with the distribution.
* Neither the name of the Sun Microsystems, Inc. nor the names of its contributors may be used to endorse or promote products derived from this software without specific prior written permission.

THIS SOFTWARE IS PROVIDED BY THE COPYRIGHT HOLDERS AND CONTRIBUTORS ``AS IS'' AND ANY EXPRESS OR IMPLIED WARRANTIES, INCLUDING, BUT NOT LIMITED TO, THE IMPLIED WARRANTIES OF MERCHANTABILITY AND FITNESS FOR A PARTICULAR PURPOSE ARE DISCLAIMED. IN NO EVENT SHALL THE COPYRIGHT HOLDERS OR CONTRIBUTORS BE LIABLE FOR ANY DIRECT, INDIRECT, INCIDENTAL, SPECIAL, EXEMPLARY, OR CONSEQUENTIAL DAMAGES (INCLUDING, BUT NOT LIMITED TO, PROCUREMENT OF SUBSTITUTE GOODS OR SERVICES; LOSS OF USE, DATA, OR PROFITS; OR BUSINESS INTERRUPTION) HOWEVER CAUSED AND ON ANY THEORY OF LIABILITY, WHETHER IN CONTRACT, STRICT LIABILITY, OR TORT (INCLUDING NEGLIGENCE OR OTHERWISE) ARISING IN ANY WAY OUT OF THE USE OF THIS SOFTWARE, EVEN IF ADVISED OF THE POSSIBILITY OF SUCH DAMAGE.

---- Part 5: Sparta, Inc copyright notice (BSD) -----

Copyright (c) 2003-2012, Sparta, Inc

All rights reserved.

Redistribution and use in source and binary forms, with or without modification, are permitted provided that the following conditions are met:

* Redistributions of source code must retain the above copyright notice, this list of conditions and the following disclaimer.
* Redistributions in binary form must reproduce the above copyright notice, this list of conditions and the following disclaimer in the documentation and/or other materials provided with the distribution.
* Neither the name of Sparta, Inc nor the names of its contributors may be used to endorse or promote products derived from this software without specific prior written permission.

THIS SOFTWARE IS PROVIDED BY THE COPYRIGHT HOLDERS AND CONTRIBUTORS ``AS IS'' AND ANY EXPRESS OR IMPLIED WARRANTIES, INCLUDING, BUT NOT LIMITED TO, THE IMPLIED WARRANTIES OF MERCHANTABILITY AND FITNESS FOR A PARTICULAR PURPOSE ARE DISCLAIMED. IN NO EVENT SHALL THE COPYRIGHT HOLDERS OR CONTRIBUTORS BE LIABLE FOR ANY DIRECT, INDIRECT, INCIDENTAL, SPECIAL, EXEMPLARY, OR CONSEQUENTIAL DAMAGES (INCLUDING, BUT NOT LIMITED TO, PROCUREMENT OF SUBSTITUTE GOODS OR SERVICES; LOSS OF USE, DATA, OR PROFITS; OR BUSINESS INTERRUPTION) HOWEVER CAUSED AND ON ANY THEORY OF LIABILITY, WHETHER IN CONTRACT, STRICT LIABILITY, OR TORT (INCLUDING NEGLIGENCE OR OTHERWISE) ARISING IN ANY WAY OUT OF THE USE OF THIS SOFTWARE, EVEN IF ADVISED OF THE POSSIBILITY OF SUCH DAMAGE.

---- Part 6: Cisco/BUPTNIC copyright notice (BSD) -----

Copyright (c) 2004, Cisco, Inc and Information Network Center of Beijing University of Posts and Telecommunications.

All rights reserved.

Redistribution and use in source and binary forms, with or without modification, are permitted provided that the following conditions are met:

* Redistributions of source code must retain the above copyright notice, this list of conditions and the following disclaimer.
* Redistributions in binary form must reproduce the above copyright notice, this list of conditions and the following disclaimer in the documentation and/or other materials provided with the distribution.
* Neither the name of Cisco, Inc, Beijing University of Posts and Telecommunications, nor the names of their contributors may be used to endorse or promote products derived from this software without specific prior written permission.

THIS SOFTWARE IS PROVIDED BY THE COPYRIGHT HOLDERS AND CONTRIBUTORS ``AS IS'' AND ANY EXPRESS OR IMPLIED WARRANTIES, INCLUDING, BUT NOT LIMITED TO, THE IMPLIED WARRANTIES OF MERCHANTABILITY AND FITNESS FOR A PARTICULAR PURPOSE ARE DISCLAIMED. IN NO EVENT SHALL THE COPYRIGHT HOLDERS OR CONTRIBUTORS BE LIABLE FOR ANY DIRECT, INDIRECT, INCIDENTAL, SPECIAL, EXEMPLARY, OR CONSEQUENTIAL DAMAGES (INCLUDING, BUT NOT LIMITED TO, PROCUREMENT OF SUBSTITUTE GOODS OR SERVICES; LOSS OF USE, DATA, OR PROFITS; OR BUSINESS INTERRUPTION) HOWEVER CAUSED AND ON ANY THEORY OF LIABILITY, WHETHER IN CONTRACT, STRICT LIABILITY, OR TORT (INCLUDING NEGLIGENCE OR OTHERWISE) ARISING IN ANY WAY OUT OF THE USE OF THIS SOFTWARE, EVEN IF ADVISED OF THE POSSIBILITY OF SUCH DAMAGE.

---- Part 7: Fabasoft R&D Software GmbH & Co KG copyright notice (BSD) -----

Copyright (c) Fabasoft R&D Software GmbH & Co KG, 2003 oss@fabasoft.com

Author: Bernhard Penz <bernhard.penz@fabasoft.com>

Redistribution and use in source and binary forms, with or without modification, are permitted provided that the following conditions are met:

* Redistributions of source code must retain the above copyright notice, this list of conditions and the following disclaimer.
* Redistributions in binary form must reproduce the above copyright notice, this list of conditions and the following disclaimer in the documentation and/or other materials provided with the distribution.
* The name of Fabasoft R&D Software GmbH & Co KG or any of its subsidiaries, brand or product names may not be used to endorse or promote products derived from this software without specific prior written permission.

THIS SOFTWARE IS PROVIDED BY THE COPYRIGHT HOLDER ``AS IS'' AND ANY EXPRESS OR IMPLIED WARRANTIES, INCLUDING, BUT NOT LIMITED TO, THE IMPLIED WARRANTIES OF MERCHANTABILITY AND FITNESS FOR A PARTICULAR PURPOSE ARE DISCLAIMED. IN NO EVENT SHALL THE COPYRIGHT HOLDER BE LIABLE FOR ANY DIRECT, INDIRECT, INCIDENTAL, SPECIAL, EXEMPLARY, OR CONSEQUENTIAL DAMAGES (INCLUDING, BUT NOT LIMITED TO, PROCUREMENT OF SUBSTITUTE GOODS OR SERVICES; LOSS OF USE, DATA, OR PROFITS; OR BUSINESS INTERRUPTION) HOWEVER CAUSED AND ON ANY THEORY OF LIABILITY, WHETHER

IN CONTRACT, STRICT LIABILITY, OR TORT (INCLUDING NEGLIGENCE OR OTHERWISE) ARISING IN ANY WAY OUT OF THE USE OF THIS SOFTWARE, EVEN IF ADVISED OF THE POSSIBILITY OF SUCH DAMAGE.

---- Part 8: Apple Inc. copyright notice (BSD) -----

Copyright (c) 2007 Apple Inc. All rights reserved.

Redistribution and use in source and binary forms, with or without modification, are permitted provided that the following conditions are met:

1. Redistributions of source code must retain the above copyright notice, this list of conditions and the following disclaimer.
2. Redistributions in binary form must reproduce the above copyright notice, this list of conditions and the following disclaimer in the documentation and/or other materials provided with the distribution.
3. Neither the name of Apple Inc. ("Apple") nor the names of its contributors may be used to endorse or promote products derived from this software without specific prior written permission.

THIS SOFTWARE IS PROVIDED BY APPLE AND ITS CONTRIBUTORS "AS IS" AND ANY EXPRESS OR IMPLIED WARRANTIES, INCLUDING, BUT NOT LIMITED TO, THE IMPLIED WARRANTIES OF MERCHANTABILITY AND FITNESS FOR A PARTICULAR PURPOSE ARE DISCLAIMED. IN NO EVENT SHALL APPLE OR ITS CONTRIBUTORS BE LIABLE FOR ANY DIRECT, INDIRECT, INCIDENTAL, SPECIAL, EXEMPLARY, OR CONSEQUENTIAL DAMAGES (INCLUDING, BUT NOT LIMITED TO, PROCUREMENT OF SUBSTITUTE GOODS OR SERVICES; LOSS OF USE, DATA, OR PROFITS; OR BUSINESS INTERRUPTION) HOWEVER CAUSED AND ON ANY THEORY OF LIABILITY, WHETHER IN CONTRACT, STRICT LIABILITY, OR TORT (INCLUDING NEGLIGENCE OR OTHERWISE) ARISING IN ANY WAY OUT OF THE USE OF THIS SOFTWARE, EVEN IF ADVISED OF THE POSSIBILITY OF SUCH DAMAGE.

---- Part 9: ScienceLogic, LLC copyright notice (BSD) -----

Copyright (c) 2009, ScienceLogic, LLC

All rights reserved.

Redistribution and use in source and binary forms, with or without modification, are permitted provided that the following conditions are met:

* Redistributions of source code must retain the above copyright notice, this list of conditions and the following disclaimer.
* Redistributions in binary form must reproduce the above copyright notice, this list of conditions and the following disclaimer in the documentation and/or other materials provided with the distribution.
* Neither the name of ScienceLogic, LLC nor the names of its contributors may be used to endorse or promote products derived from this software without specific prior written permission.

THIS SOFTWARE IS PROVIDED BY THE COPYRIGHT HOLDERS AND CONTRIBUTORS "AS IS" AND ANY EXPRESS OR IMPLIED WARRANTIES, INCLUDING, BUT NOT LIMITED TO, THE IMPLIED WARRANTIES OF MERCHANTABILITY AND FITNESS FOR A PARTICULAR PURPOSE ARE DISCLAIMED. IN NO EVENT SHALL THE COPYRIGHT HOLDERS OR CONTRIBUTORS BE LIABLE FOR ANY DIRECT, INDIRECT, INCIDENTAL, SPECIAL, EXEMPLARY, OR CONSEQUENTIAL DAMAGES (INCLUDING, BUT NOT LIMITED TO, PROCUREMENT OF SUBSTITUTE GOODS OR SERVICES; LOSS OF USE, DATA, OR PROFITS; OR BUSINESS INTERRUPTION) HOWEVER

CAUSED AND ON ANY THEORY OF LIABILITY, WHETHER IN CONTRACT, STRICT LIABILITY, OR TORT (INCLUDING NEGLIGENCE OR OTHERWISE) ARISING IN ANY WAY OUT OF THE USE OF THIS SOFTWARE, EVEN IF ADVISED OF THE POSSIBILITY OF SUCH DAMAGE.

LEADTOOLS

Copyright (C) 1991-2009 LEAD Technologies, Inc.

CMap Resources

Copyright 1990-2009 Adobe Systems Incorporated.
All rights reserved.

Copyright 1990-2010 Adobe Systems Incorporated.
All rights reserved.

Redistribution and use in source and binary forms, with or without modification, are permitted provided that the following conditions are met:

Redistributions of source code must retain the above copyright notice, this list of conditions and the following disclaimer.

Redistributions in binary form must reproduce the above copyright notice, this list of conditions and the following disclaimer in the documentation and/or other materials provided with the distribution.

Neither the name of Adobe Systems Incorporated nor the names of its contributors may be used to endorse or promote products derived from this software without specific prior written permission.

THIS SOFTWARE IS PROVIDED BY THE COPYRIGHT HOLDERS AND CONTRIBUTORS "AS IS" AND ANY EXPRESS OR IMPLIED WARRANTIES, INCLUDING, BUT NOT LIMITED TO, THE IMPLIED WARRANTIES OF MERCHANTABILITY AND FITNESS FOR A PARTICULAR PURPOSE ARE DISCLAIMED. IN NO EVENT SHALL THE COPYRIGHT HOLDER OR CONTRIBUTORS BE LIABLE FOR ANY DIRECT, INDIRECT, INCIDENTAL, SPECIAL, EXEMPLARY, OR CONSEQUENTIAL DAMAGES (INCLUDING, BUT NOT LIMITED TO, PROCUREMENT OF SUBSTITUTE GOODS OR SERVICES; LOSS OF USE, DATA, OR PROFITS; OR BUSINESS INTERRUPTION) HOWEVER CAUSED AND ON ANY THEORY OF LIABILITY, WHETHER IN CONTRACT, STRICT LIABILITY, OR TORT (INCLUDING NEGLIGENCE OR OTHERWISE) ARISING IN ANY WAY OUT OF THE USE OF THIS SOFTWARE, EVEN IF ADVISED OF THE POSSIBILITY OF SUCH DAMAGE.

MIT License

Copyright (c) 1998, 1999, 2000 Thai Open Source Software Center Ltd

Permission is hereby granted, free of charge, to any person obtaining a copy of this software and associated documentation files (the "Software"), to deal in the Software without restriction, including without limitation the rights to use, copy, modify, merge, publish, distribute, sublicense, and/or sell copies of the Software, and to permit persons to whom the Software is furnished to do so, subject to the following conditions:

The above copyright notice and this permission notice shall be included in all copies or substantial portions of the Software.

THE SOFTWARE IS PROVIDED "AS IS", WITHOUT WARRANTY OF ANY KIND, EXPRESS OR IMPLIED, INCLUDING BUT NOT LIMITED TO THE WARRANTIES OF MERCHANTABILITY, FITNESS FOR A PARTICULAR PURPOSE AND NONINFRINGEMENT. IN NO EVENT SHALL THE AUTHORS OR COPYRIGHT HOLDERS BE LIABLE FOR ANY CLAIM, DAMAGES OR OTHER LIABILITY, WHETHER IN AN ACTION OF CONTRACT, TORT OR OTHERWISE, ARISING FROM, OUT OF OR IN CONNECTION WITH THE SOFTWARE OR THE USE OR OTHER DEALINGS IN THE SOFTWARE.

Copyright 2000 Computing Research Labs, New Mexico State University

Copyright 2001-2015 Francesco Zappa Nardelli

Permission is hereby granted, free of charge, to any person obtaining a copy of this software and associated documentation files (the "Software"), to deal in the Software without restriction, including without limitation the rights to use, copy, modify, merge, publish, distribute, sublicense, and/or sell copies of the Software, and to permit persons to whom the Software is furnished to do so, subject to the following conditions:

The above copyright notice and this permission notice shall be included in all copies or substantial portions of the Software.

THE SOFTWARE IS PROVIDED "AS IS", WITHOUT WARRANTY OF ANY KIND, EXPRESS OR IMPLIED, INCLUDING BUT NOT LIMITED TO THE WARRANTIES OF MERCHANTABILITY, FITNESS FOR A PARTICULAR PURPOSE AND NONINFRINGEMENT. IN NO EVENT SHALL THE COMPUTING RESEARCH LAB OR NEW MEXICO STATE UNIVERSITY BE LIABLE FOR ANY CLAIM, DAMAGES OR OTHER LIABILITY, WHETHER IN AN ACTION OF CONTRACT, TORT OR OTHERWISE, ARISING FROM, OUT OF OR IN CONNECTION WITH THE SOFTWARE OR THE USE OR OTHER DEALINGS IN THE SOFTWARE.

Written by Joel Sherrill <joel@OARcorp.com>.

COPYRIGHT (c) 1989-2000.

On-Line Applications Research Corporation (OAR).

Permission to use, copy, modify, and distribute this software for any purpose without fee is hereby granted, provided that this entire notice is included in all copies of any software which is or includes a copy or modification of this software.

THIS SOFTWARE IS BEING PROVIDED "AS IS", WITHOUT ANY EXPRESS OR IMPLIED WARRANTY. IN PARTICULAR, THE AUTHOR MAKES NO REPRESENTATION OR WARRANTY OF ANY KIND CONCERNING THE MERCHANTABILITY OF THIS SOFTWARE OR ITS FITNESS FOR ANY PARTICULAR PURPOSE.

(1) Red Hat Incorporated

Copyright (c) 1994-2009 Red Hat, Inc. All rights reserved.

This copyrighted material is made available to anyone wishing to use, modify, copy, or redistribute it subject to the terms and conditions of the BSD License. This program is distributed in the hope that it will be useful, but WITHOUT ANY WARRANTY expressed or implied, including the implied warranties of MERCHANTABILITY or FITNESS FOR A PARTICULAR PURPOSE. A copy of this license is available at http://www.opensource.org/licenses. Any Red Hat trademarks that are incorporated in the source code or documentation are not subject to the BSD License and may only be used or replicated with the express permission of Red Hat, Inc.

(2) University of California, Berkeley

Copyright (c) 1981-2000 The Regents of the University of California.

All rights reserved.

Redistribution and use in source and binary forms, with or without modification, are permitted provided that the following conditions are met:

* Redistributions of source code must retain the above copyright notice, this list of conditions and the following disclaimer.
* Redistributions in binary form must reproduce the above copyright notice, this list of conditions and the following disclaimer in the documentation and/or other materials provided with the distribution.
* Neither the name of the University nor the names of its contributors may be used to endorse or promote products derived from this software without specific prior written permission.

THIS SOFTWARE IS PROVIDED BY THE COPYRIGHT HOLDERS AND CONTRIBUTORS "AS IS" AND ANY EXPRESS OR IMPLIED WARRANTIES, INCLUDING, BUT NOT LIMITED TO, THE IMPLIED WARRANTIES OF MERCHANTABILITY AND FITNESS FOR A PARTICULAR PURPOSE ARE DISCLAIMED. IN NO EVENT SHALL THE COPYRIGHT OWNER OR CONTRIBUTORS BE LIABLE FOR ANY DIRECT, INDIRECT, INCIDENTAL, SPECIAL, EXEMPLARY, OR CONSEQUENTIAL DAMAGES (INCLUDING, BUT NOT LIMITED TO, PROCUREMENT OF SUBSTITUTE GOODS OR SERVICES; LOSS OF USE, DATA, OR PROFITS; OR BUSINESS INTERRUPTION) HOWEVER CAUSED AND ON ANY THEORY OF LIABILITY, WHETHER IN CONTRACT, STRICT LIABILITY, OR TORT (INCLUDING NEGLIGENCE OR OTHERWISE) ARISING IN ANY WAY OUT OF THE USE OF THIS SOFTWARE, EVEN IF ADVISED OF THE POSSIBILITY OF SUCH DAMAGE.

The FreeType Project LICENSE

2006-Jan-27

Copyright 1996-2002, 2006 by

David Turner, Robert Wilhelm, and Werner Lemberg

Introduction

==========

The FreeType Project is distributed in several archive packages; some of them may contain, in addition to the FreeType font engine, various tools and contributions which rely on, or relate to, the FreeType Project.

This license applies to all files found in such packages, and which do not fall under their own explicit license. The license affects thus the FreeType font engine, the test programs, documentation and makefiles, at the very least.

This license was inspired by the BSD, Artistic, and IJG (Independent JPEG Group) licenses, which all encourage inclusion and use of free software in commercial and freeware products alike. As a consequence, its main points are that:

o We don't promise that this software works. However, we will be interested in any kind of bug reports. (`as is' distribution)

o You can use this software for whatever you want, in parts or full form, without having to pay us. (`royalty-free' usage)

o You may not pretend that you wrote this software. If you use it, or only parts of it, in a program, you must acknowledge somewhere in your documentation that you have used the FreeType code. (`credits')

We specifically permit and encourage the inclusion of this software, with or without modifications, in commercial products.

We disclaim all warranties covering The FreeType Project and assume no liability related to The FreeType Project.

Finally, many people asked us for a preferred form for a credit/disclaimer to use in compliance with this license. We thus encourage you to use the following text:

"""

Portions of this software are copyright © <year> The FreeType

Project (www.freetype.org). All rights reserved.

"""

Please replace <year> with the value from the FreeType version you actually use.

Legal Terms

==========

0. Definitions

Throughout this license, the terms `package', `FreeType Project', and `FreeType archive' refer to the set of files originally distributed by the authors (David Turner, Robert Wilhelm, and Werner Lemberg) as the `FreeType Project', be they named as alpha, beta or final release.

`You' refers to the licensee, or person using the project, where `using' is a generic term including compiling the project's source code as well as linking it to form a `program' or `executable'.

This program is referred to as `a program using the FreeType engine'.

This license applies to all files distributed in the original FreeType Project, including all source code, binaries and documentation, unless otherwise stated in the file in its original, unmodified form as distributed in the original archive.

If you are unsure whether or not a particular file is covered by this license, you must contact us to verify this.

The FreeType Project is copyright (C) 1996-2000 by David Turner, Robert Wilhelm, and Werner Lemberg. All rights reserved except as specified below.

1. No Warranty

THE FREETYPE PROJECT IS PROVIDED `AS IS' WITHOUT WARRANTY OF ANY KIND, EITHER EXPRESS OR IMPLIED, INCLUDING, BUT NOT LIMITED TO, WARRANTIES OF MERCHANTABILITY AND FITNESS FOR A PARTICULAR PURPOSE. IN NO EVENT WILL ANY OF THE AUTHORS OR COPYRIGHT HOLDERS BE LIABLE FOR ANY DAMAGES CAUSED BY THE USE OR THE INABILITY TO USE, OF THE FREETYPE PROJECT.

2. Redistribution

This license grants a worldwide, royalty-free, perpetual and irrevocable right and license to use, execute, perform, compile, display, copy, create derivative works of, distribute and sublicense the FreeType Project (in both source and object code forms) and derivative works thereof for any purpose; and to authorize others to exercise some or all of the rights granted herein, subject to the following conditions:

o Redistribution of source code must retain this license file (`FTL.TXT') unaltered; any additions, deletions or changes to the original files must be clearly indicated in accompanying documentation. The copyright notices of the unaltered, original files must be preserved in all copies of source files.

o Redistribution in binary form must provide a disclaimer that states that the software is based in part of the work of the FreeType Team, in the distribution documentation. We also encourage you to put an URL to the FreeType web page in your documentation, though this isn't mandatory.

These conditions apply to any software derived from or based on the FreeType Project, not just the unmodified files. If you use our work, you must acknowledge us. However, no fee need be paid to us.

3. Advertising

Neither the FreeType authors and contributors nor you shall use the name of the other for commercial, advertising, or promotional purposes without specific prior written permission.

We suggest, but do not require, that you use one or more of the following phrases to refer to this software in your documentation or advertising materials: `FreeType Project', `FreeType Engine', `FreeType library', or `FreeType Distribution'.

As you have not signed this license, you are not required to accept it. However, as the FreeType Project is copyrighted material, only this license, or another one contracted with the authors, grants you the right to use, distribute, and modify it.

Therefore, by using, distributing, or modifying the FreeType Project, you indicate that you understand and accept all the terms of this license.

4. Contacts

There are two mailing lists related to FreeType:

o freetype@nongnu.org

Discusses general use and applications of FreeType, as well as future and wanted additions to the library and distribution.

If you are looking for support, start in this list if you haven't found anything to help you in the documentation.

o freetype-devel@nongnu.org

Discusses bugs, as well as engine internals, design issues, specific licenses, porting, etc.

Our home page can be found at

http://www.freetype.org

--- end of FTL.TXT ---

The following applies only to products supporting Wi-Fi.

(c) 2009-2013 by Jeff Mott. All rights reserved.

Redistribution and use in source and binary forms, with or without modification, are permitted provided that the following conditions are met:

* Redistributions of source code must retain the above copyright notice, this list of conditions, and the following disclaimer.
* Redistributions in binary form must reproduce the above copyright notice, this list of conditions, and the following disclaimer in the documentation or other materials provided with the distribution.
* Neither the name CryptoJS nor the names of its contributors may be used to endorse or promote products derived from this software without specific prior written permission.

THIS SOFTWARE IS PROVIDED BY THE COPYRIGHT HOLDERS AND CONTRIBUTORS "AS IS," AND ANY EXPRESS OR IMPLIED WARRANTIES, INCLUDING, BUT NOT LIMITED TO, THE IMPLIED WARRANTIES OF MERCHANTABILITY AND FITNESS FOR A PARTICULAR PURPOSE, ARE DISCLAIMED. IN NO EVENT SHALL THE COPYRIGHT HOLDER OR CONTRIBUTORS BE LIABLE FOR ANY DIRECT, INDIRECT, INCIDENTAL, SPECIAL, EXEMPLARY, OR CONSEQUENTIAL DAMAGES (INCLUDING, BUT NOT LIMITED TO, PROCUREMENT OF SUBSTITUTE GOODS OR SERVICES; LOSS OF USE, DATA, OR PROFITS; OR BUSINESS INTERRUPTION) HOWEVER CAUSED AND ON ANY THEORY OF LIABILITY, WHETHER IN CONTRACT, STRICT LIABILITY, OR TORT (INCLUDING NEGLIGENCE OR OTHERWISE) ARISING IN ANY WAY OUT OF THE USE OF THIS SOFTWARE, EVEN IF ADVISED OF THE POSSIBILITY OF SUCH DAMAGE.

Basic Operation

- Printing Photos from a Computer
- Printing Photos from a Smartphone/Tablet
- Copying
- Faxing

Printing Photos from a Computer

This section describes how to print photos with My Image Garden.

1. Open the paper support (A) and paper support extension (B).

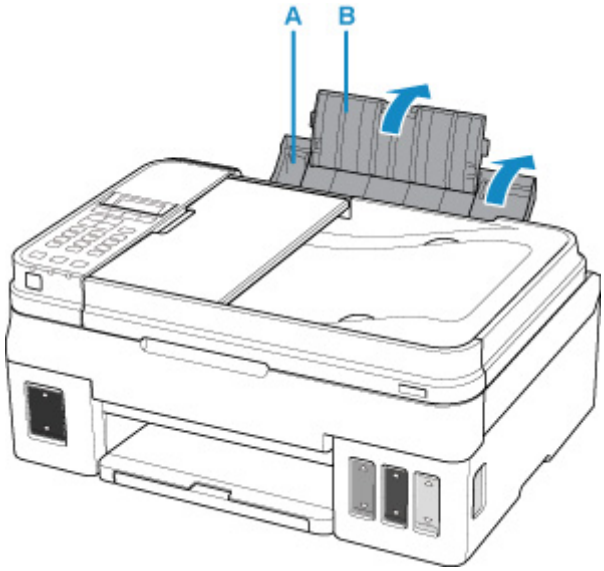

2. Pull out the paper output tray (C) and open the output tray extension (D).

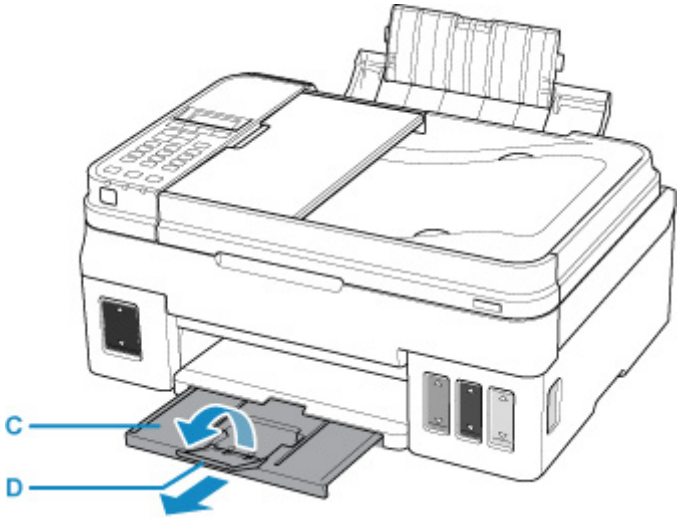

3. Load paper WITH THE PRINT SIDE FACING UP.

4. Align the paper guides (E) with the paper width.

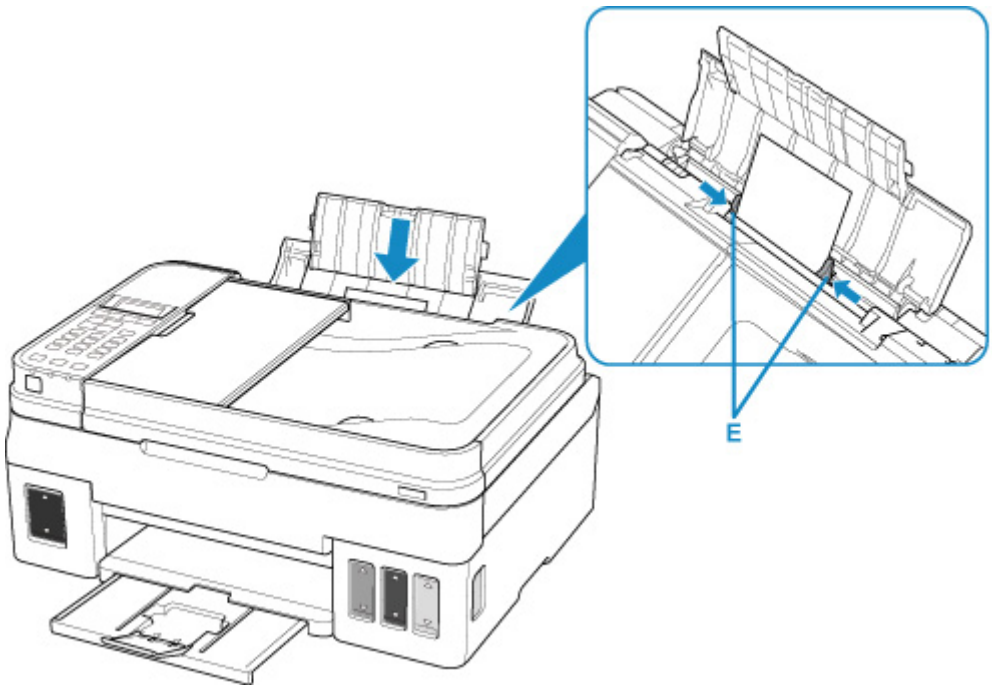

After loading paper on the rear tray, the paper information registration screen for the rear tray is displayed on the LCD.

5. Press the **OK** button.

```
Register the rear tray pa
[OK]Next
```

6. Use the ◄ ► button to select the size of the loaded paper on the rear tray, then press the **OK** button.

```
Size:   ◄   2L/5"x7"   ►
Type:     *Plain paper
```

Note

- The * (asterisk) on the LCD indicates the current setting.

7. Use the ◄ ► button to select the type of the loaded paper on the rear tray, then press the **OK** button.

```
Size:       2L/5"x7"
Type:   ◄    Glossy    ►
```

8. Click the My Image Garden icon (F) in Quick Menu.

The **Guide Menu** screen is displayed.

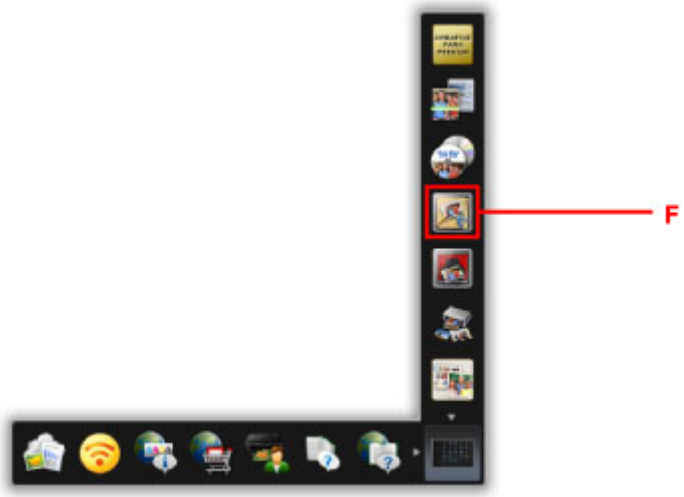

Note

- The number and types of icons displayed vary depending on your region, the registered printer/scanner and the installed applications.

9. Click the **Photo Print** icon (G).

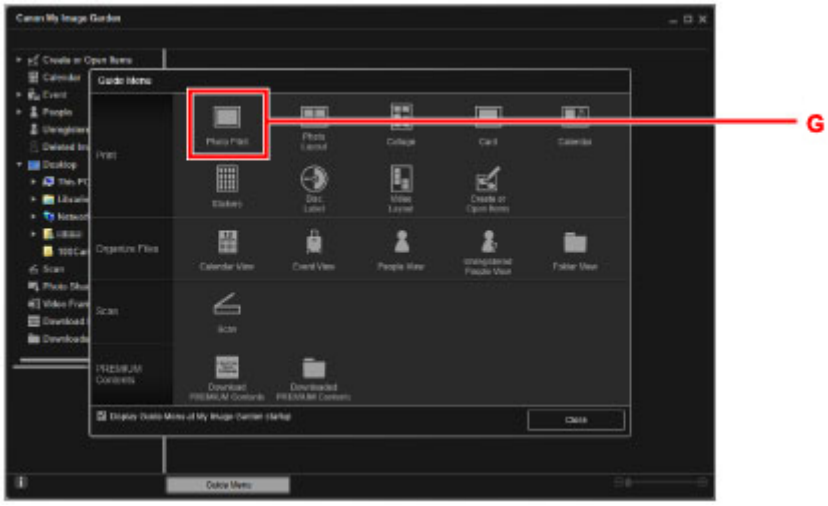

10. Click the folder (H) with photos you want to print.

11. Click the photos (I) you want to print.

    For Windows:

    To select two or more photos at a time, click photos while pressing the Ctrl key.

    For macOS:

    To select two or more photos at a time, click photos while pressing the command key.

12. Click **Print** (J).

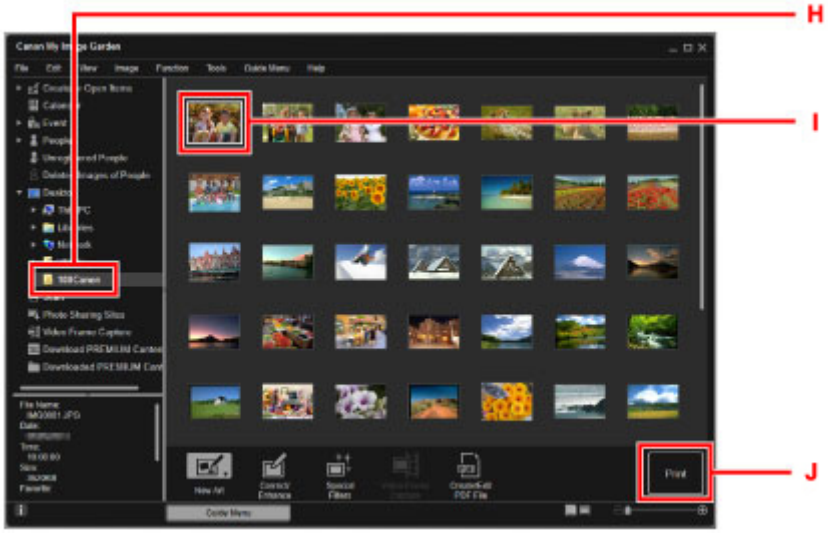

13. Specify the number of copies, your printer name, media type, etc. (K).

14. Click **Print** (L).

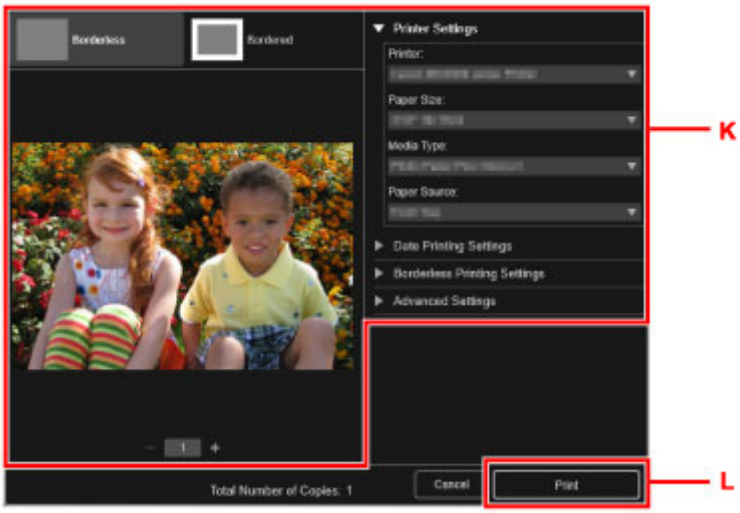

For macOS:

Click **OK** when the confirmation message appears, then click **Print**.

Note

- My Image Garden lets you use images on your computer, such as photos taken with a digital camera, in a number of ways.
  - For Windows:
    - My Image Garden Guide
  - For macOS:
    - My Image Garden Guide

Printing Photos from a Smartphone/Tablet

This section describes how to print photos with Canon PRINT Inkjet/SELPHY.

For details on how to download Canon PRINT Inkjet/SELPHY, see below.

■ Print Easily from a Smartphone or Tablet with Canon PRINT Inkjet/SELPHY

1. Open the paper support (A) and paper support extension (B).

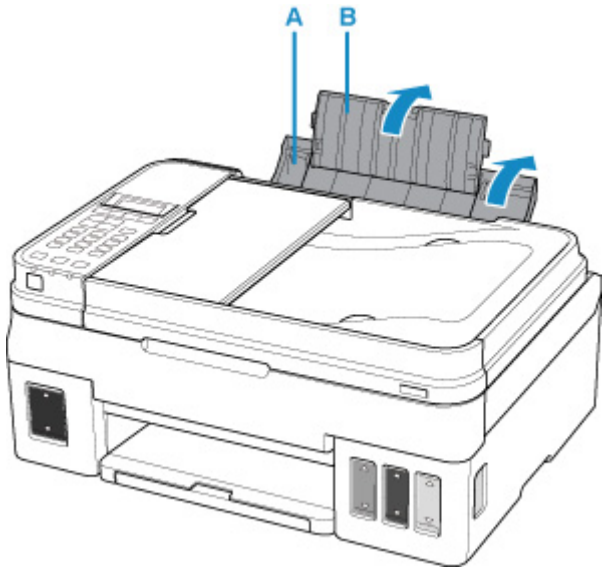

2. Pull out the paper output tray (C) and open the output tray extension (D).

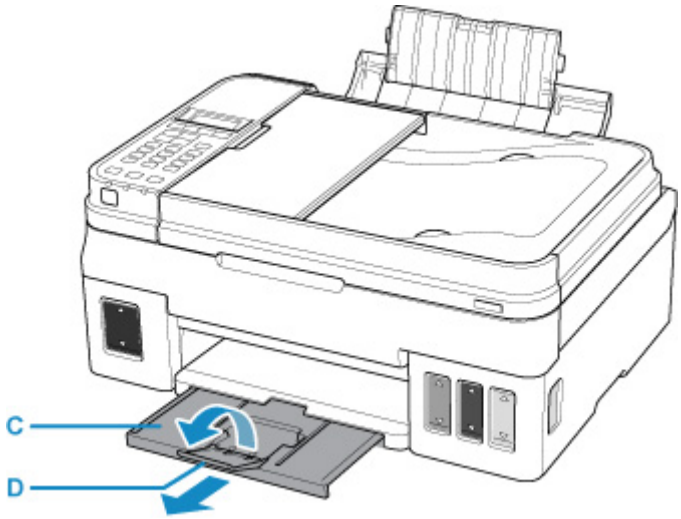

3. Load paper WITH THE PRINT SIDE FACING UP.

4. Align the paper guides (E) with the paper width.

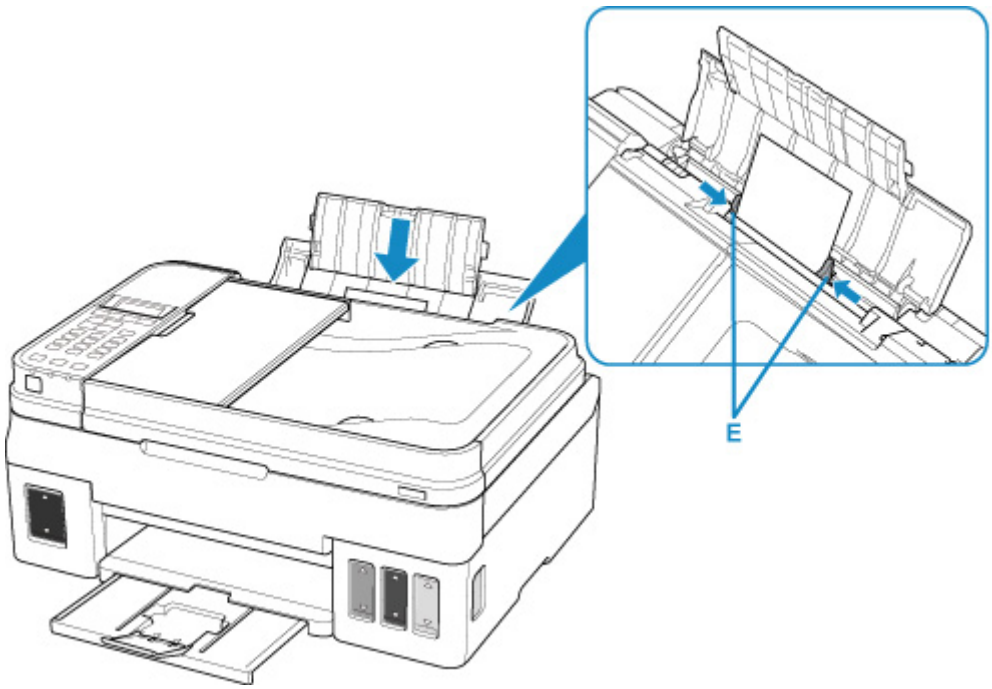

After loading paper on the rear tray, the paper information registration screen for the rear tray is displayed on the LCD.

5. Press the **OK** button.

```
Register the rear tray pa
[OK]Next
```

6. Use the ◄ ► button to select the size of the loaded paper on the rear tray, then press the **OK** button.

```
Size:   ◄   2L/5"x7"   ►
Type:     *Plain paper
```

Note

- The * (asterisk) on the LCD indicates the current setting.

7. Use the ◄ ► button to select the type of the loaded paper on the rear tray, then press the **OK** button.

```
Size:       2L/5"x7"
Type:   ◄    Glossy    ►
```

8. Start (Canon PRINT Inkjet/SELPHY) from your smartphone/tablet.

9. Select **Photo Print** on Canon PRINT Inkjet/SELPHY.

The list of photos saved on your smartphone/tablet is displayed.

10. Select a photo.

    You can also select multiple photos at once.

11. Specify the number of copies, paper size, etc.

12. Select **Print**.

Copying

This section describes how to load originals and copy them to plain paper.

1. Open the paper support (A) and paper support extension (B).

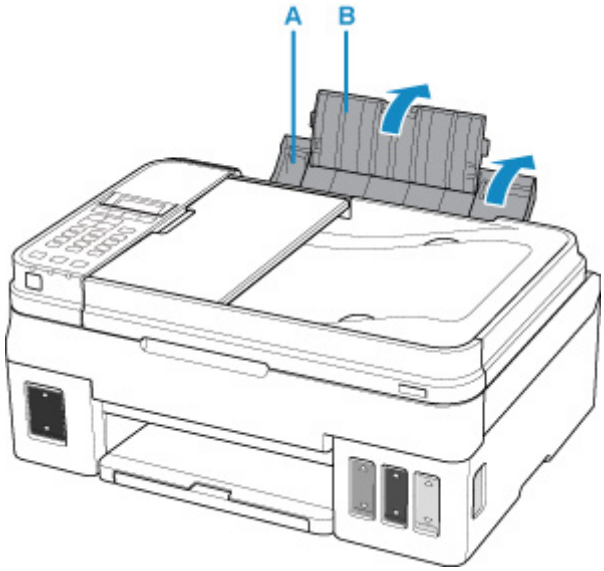

2. Pull out the paper output tray (C) and open the output tray extension (D).

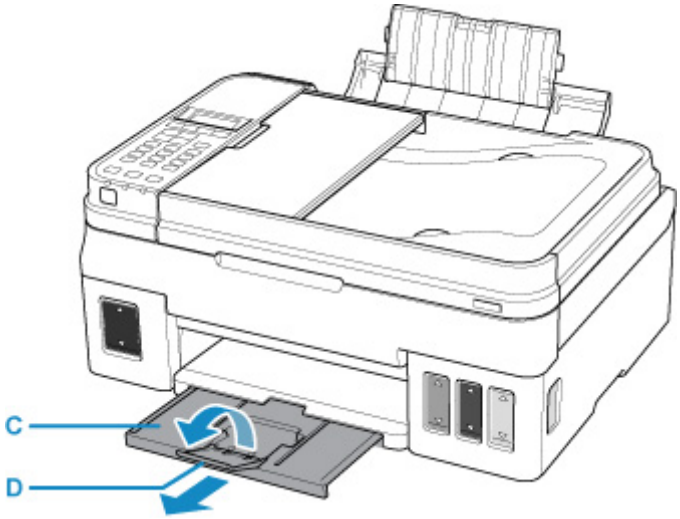

3. Load paper WITH THE PRINT SIDE FACING UP.

4. Align the paper guides (E) with the paper width.

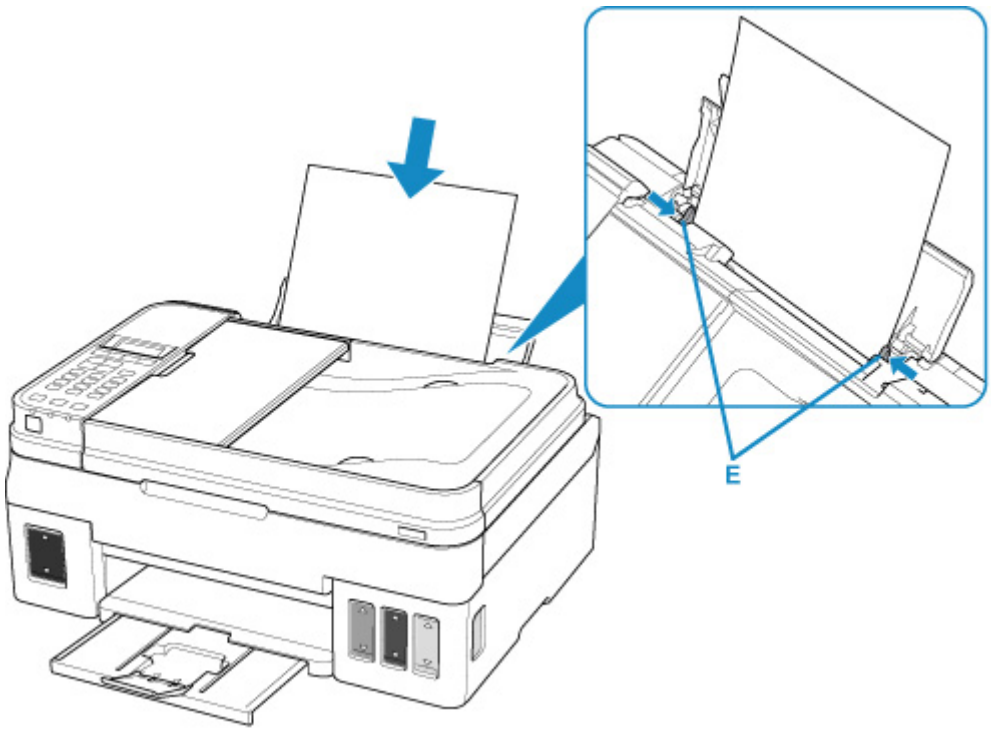

After loading paper on the rear tray, the paper information registration screen for the rear tray is displayed on the LCD.

5. Press the **OK** button.

```
Register the rear tray pa
[OK]Next
```

6. Use the ◄ ► button to select the size of the loaded paper on the rear tray, then press the **OK** button.

```
Size:   ◄     *A4     ►
Type:     *Plain paper
```

Note

- The * (asterisk) on the LCD indicates the current setting.

7. Use the ◄ ► button to select the type of the loaded paper on the rear tray, then press the **OK** button.

```
Size:         *A4
Type:     *Plain paper  ►
```

8. Press the **COPY** button (F).

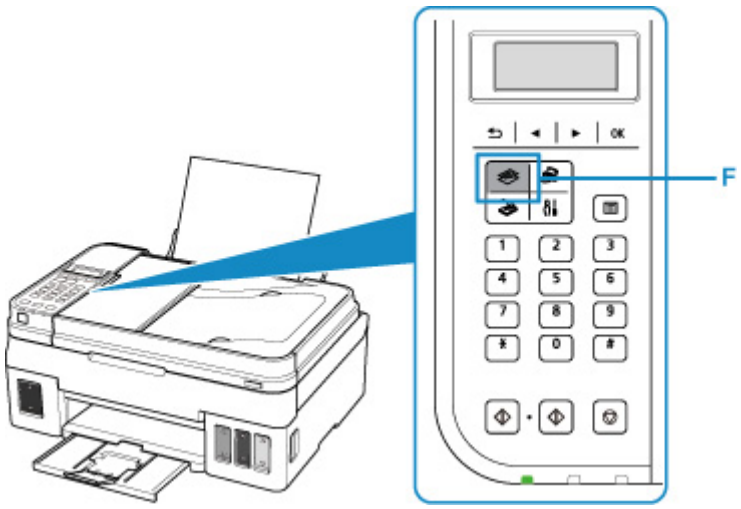

9. Open the document cover (G).

10. Load the original WITH THE SIDE TO COPY FACING DOWN and align it with the alignment mark (H).

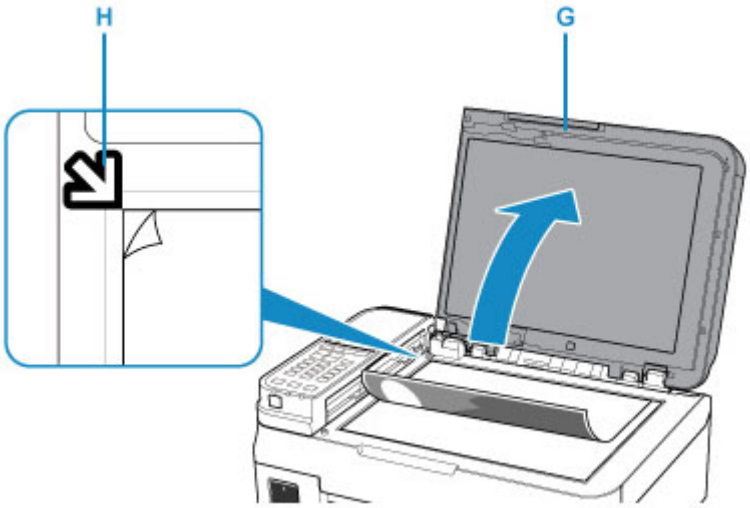

Note

- To copy two or more documents continuously, load them in the ADF (Auto Document Feeder).

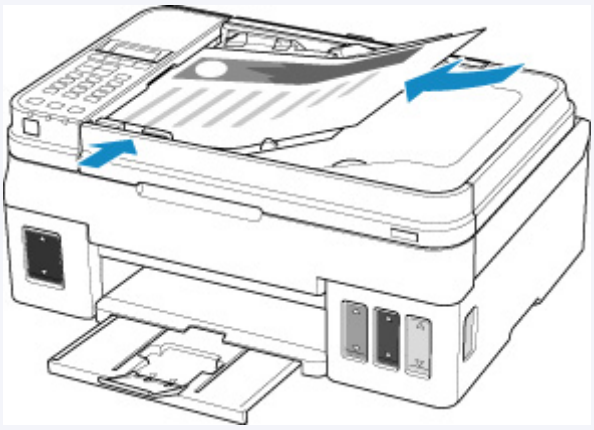

Loading Documents in the ADF (Auto Document Feeder)

2. Close the document cover.

3. Press the **Black** button (I) or **Color** button (J).

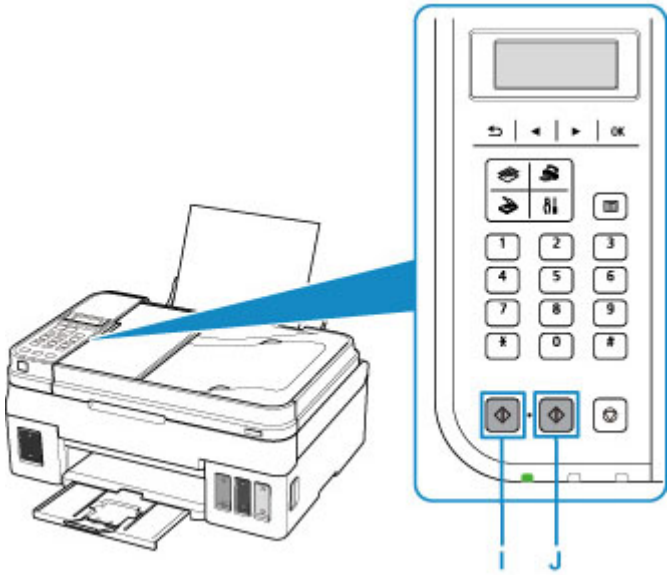

Important

- Do not open the document cover until copying is complete.

Note

- Your printer is equipped with many other convenient copy features.

  Copying

Faxing

Fax multiple documents in black and white as follows.

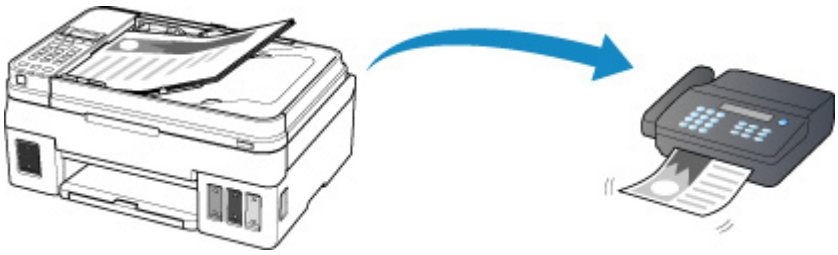

1. Open the document tray (A).

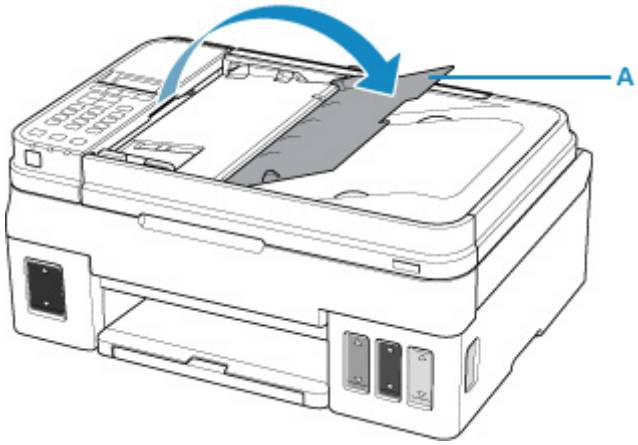

2. Insert the document WITH THE SIDE TO SCAN FACING UP.

3. Adjust the document guide (B).

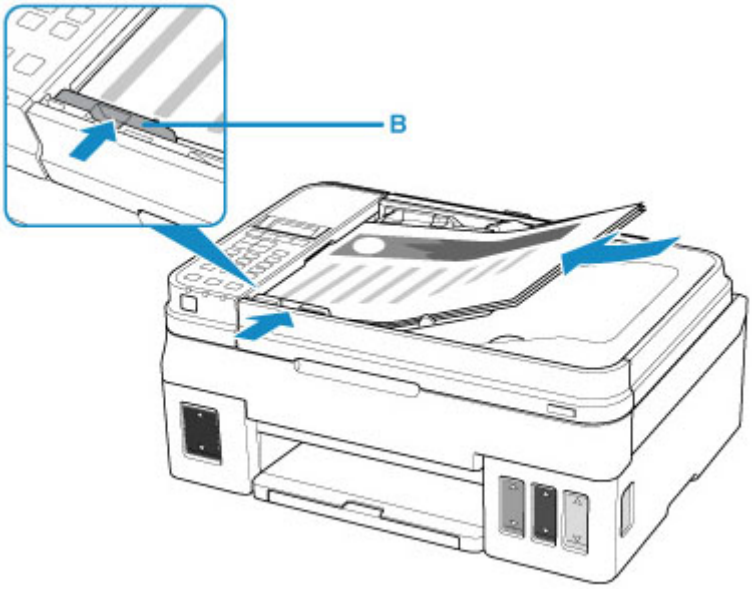

4. Press the **FAX** button (C).

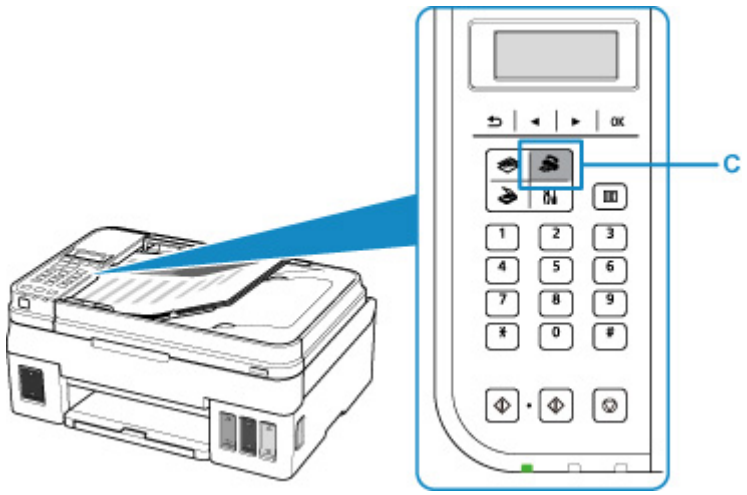

5. Use the Numeric buttons (D) to enter the fax number.

6. Press the **Black** button (E).

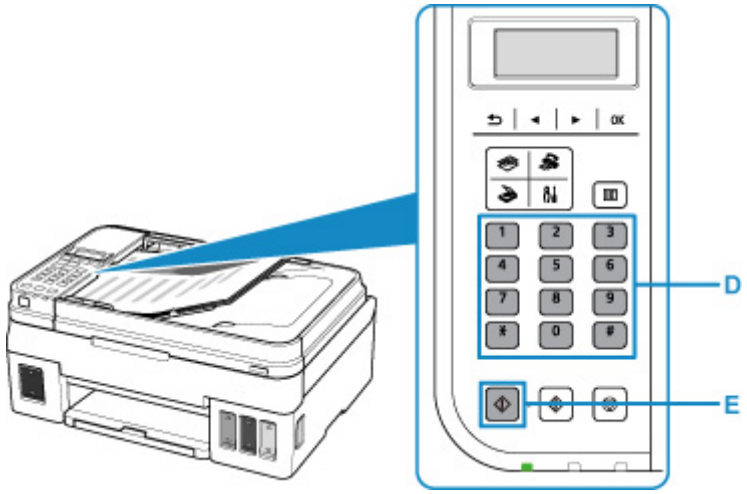

Note

- Many other convenient faxing features are available.

  Faxing

Network

Available Connection Methods

The following connection methods are available on the printer.

- Wireless Connection
  Connect the printer and devices (e.g. computer/smartphone/tablet) using a wireless router.

  If you have a wireless router, we recommend you use one for wireless connection.

  - Connection methods vary depending on the wireless router type.
  - You can change network settings such as the SSID and security protocol on the printer.
  - When the connection between a device and a wireless router is completed and (Wi-Fi icon) is displayed in the device's screen, you can connect the device to the printer using the wireless router.
- Wireless Direct
  Connect the printer and devices (e.g. computer/smartphone/tablet) without using a wireless router.

  - While you are using the printer with Wireless Direct, Internet connection from the printer becomes unavailable. In that case, web services for the printer cannot be used.
  - If you connect a device connected to the Internet via a wireless router to the printer that is in the Wireless Direct, the connection between the device and wireless router will be disabled. In that case, the connection of the device may switch to a mobile data connection automatically depending on your device. Transmission fees for connecting to the Internet using a mobile data connection apply.
  - In the Wireless Direct, you can connect up to five devices at the same time. If you try to connect a sixth device while five devices are already connected, an error will appear. If an error appears, disconnect a device you do not use and configure settings again.
  - Network settings such as the SSID and security protocol are specified automatically.

Note

- You can connect the printer and computer using a USB cable (USB connection). Prepare a USB cable. For details, see Connects to Another Computer via LAN/Changes from USB to LAN Connection.

Network Connection Settings/Setup

Perform connection setup for the printer and computer/smartphone/tablet.

For more on setup procedure, click here.

Changing Network Settings

See below for changing connection settings for the printer and computer/smartphone/tablet.

- To change network connection method:

- Reconfiguration Method of Wireless LAN Connection
- Changing Connection Mode

- To add computer/smartphone/tablet to the printer:
  - Connects to Another Computer via LAN/Changes from USB to LAN Connection
- To use Wireless Direct temporarily:
  - Printing/Scanning with Wireless Direct

IJ Network Device Setup Utility

IJ Network Device Setup Utility checks or diagnoses the settings of the printer and those of computer and restores the status of them if anything is wrong with network connection. Select either link below to download IJ Network Device Setup Utility.

- For Windows
- For macOS

- Performing/Changing Network Settings (Windows)

  For Windows, you can perform network settings using IJ Network Device Setup Utility.

  - IJ Network Device Setup Utility (Windows)
- Diagnosing and Repairing Network Settings (Windows/macOS)

  You can diagnose or repair network settings using IJ Network Device Setup Utility.

  - For Windows:
    - IJ Network Device Setup Utility (Windows)
  - For macOS:
    - IJ Network Device Setup Utility (macOS)

Network Connection Tips

See below for tips on using the printer via network connection.

- Network Connection Tips
- Handling Printer Configuration using the Web Browser

Troubleshooting

See Network Settings and Common Problems for troubleshooting on network connection.

Notice/Restriction

See below for details.

- Restrictions on network settings:
  - Restrictions
- Notices when printing using web service:
  - Notice for Web Service Printing

Restrictions

When connecting another device while a device (such as a computer) is already connected to the printer, connect it using the same connection method as the connected device.
If you connect using a different connection method, the connection to the device in use will be disabled.

Connection Using a Wired Network cannot be performed on printers that do not support a wired connection.

Connect via wireless router

- Make sure your device and the wireless router are connected. For details on checking these settings, see the manual supplied with the wireless router or contact its manufacturer.
  As for a device already connected to the printer without using a wireless router, reconnect it via a wireless router.
- Configuration, router functions, setup procedures and security settings of wireless routers vary depending on the system environment. For details, see the manual for your wireless router or contact its manufacturer.
- This printer does not support IEEE802.11ac. IEEE802.11a and IEEE802.11n (5 GHz) may not be supported depending on the country or region you live in. Check if your device supports IEEE802.11n, IEEE802.11g, IEEE802.11b or IEEE802.11a.
- If your device is set to the "IEEE802.11n only" mode, WEP or TKIP cannot be used as a security protocol. Change the security protocol for your device to something other than WEP and TKIP or change the setting to something other than "IEEE802.11n only."
  The connection between your device and the wireless router will be temporarily disabled while the setting is changed. Do not proceed to the next screen of this guide until setup is complete.
- For office use, consult your network administrator.
- Note that if you connect to a network with no security protection, your personal information could be disclosed to a third party.

Wireless Direct

Important

- If a device is connected to the Internet via a wireless router, and you then connect it to a printer in Wireless Direct mode, the existing connection between the device and wireless router will be disabled. In that case, the connection of the device may switch to a mobile data connection automatically depending on your device. When you connect to the Internet using a mobile data connection, charges may apply depending on your contract.
  - When you connect a device and the printer using Wireless Direct, the connection information will be saved to Wi-Fi settings. The device may be connected to the printer automatically even after disconnecting it or connecting it to another wireless router.
  - To prevent automatic connection to the printer in Wireless Direct mode, change the connection mode after using the printer, or set not to connect automatically in the Wi-Fi settings of the device.
    For details on checking or changing the wireless router settings, see the wireless router manual or contact its manufacturer.

- If you connect a device and the printer using Wireless Direct, Internet connection may become unavailable depending on your environment. In that case, web services for the printer cannot be used.

- In Wireless Direct mode, you can connect up to five devices at the same time. If you try to connect a sixth device while five devices are already connected, an error will appear.
  If an error appears, disconnect a device that does not use the printer, then configure settings again.
- Devices connected to the printer using Wireless Direct cannot communicate with each other.
- Firmware updates for the printer are not available while using Wireless Direct.
- When a device has been connected to the printer without using a wireless router and you want to set it up again using the same connection method, disconnect it first. Disable the connection between the device and printer in the Wi-Fi setting screen.

Network Connection Tips

- Default Network Settings
- Another Printer Found with Same Name
- Connects to Another Computer via LAN/Changes from USB to LAN Connection
- Printing Network Settings
- Reconfiguration Method of Wireless LAN Connection

Default Network Settings

LAN Connection Defaults

Item	Default
Change LAN	Disable LAN
SSID	BJNPSETUP
Wireless LAN security	Disable
IP address (IPv4)	Auto setup
IP address (IPv6)	Auto setup
Set printer name*	XXXXXXXXXXXX
Enable/disable IPv6	Enable
Enable/disable WSD	Enable
Timeout setting	15 minutes
Enable/disable Bonjour	Enable
Service name	Canon G4010 series
LPR protocol setting	Enable
RAW protocol	Enable
LLMNR	Active

("XX" represents alphanumeric characters.)

* Default value depends on printer. To check value, use operation panel.

LAN settings

Wireless Direct Defaults

Item	Default
SSID (Identifier for wireless direct)	DIRECT-abXX-G4010series *1
Password	YYYYYYYYYY *2
Security method	**WPA2-PSK (AES)**
WL Direct dev. name	ZZZZZZ-G4010series *3
Confirm request	Displayed

*1 "ab" is specified at random and "XX" represents last two digits of printer's MAC address. (The value is specified when the printer is turned on for the first time.)

*2 The password is specified automatically when the printer is turned on for the first time.

*3 "ZZZZZZ" represents last six digits of printer's MAC address.

Another Printer Found with Same Name

When the printer is found during setup, other printers with the same name may appear on the results screen.

Select a printer with checking the printer settings against those on detection result screen.

- For Windows:

  Check the printer's MAC address or serial to select the correct printer from the results.

- For macOS:

  The printer names appear with the MAC address added at the end or as the printer name specified by Bonjour.

  Check identifiers such as the MAC address, the printer name specified by Bonjour, and the printer's serial number to select the printer from among those that appear.

Note

- Serial number may not appear on result screen.

To check the printer's MAC address and the serial number, print out the network settings information.

Printing Network Settings

Note

- You can check the serial number by displaying on the LCD.

  System information

Connects to Another Computer via LAN/Changes from USB to LAN Connection

- For Windows:
- For macOS:

For Windows:

To add a computer to connect to the printer on a LAN or to change from USB to LAN connection, perform setup using the Setup CD-ROM or from the web page.

For macOS:

To connect an additional computer to the printer via LAN, or to change from USB to LAN connection, perform setup from the web page.

Printing Network Settings

Use the operation panel to print the printer's current network settings.

Important

- The network settings printout contains important information about your network. Handle it with care.

1. Make sure printer is turned on.

2. Load two sheets of A4 or Letter-sized plain paper.

3. Press **Setup** button.

   The **Setup menu** screen appears.

4. Select **Device settings** and press **OK** button.

5. Select **LAN settings** and press **OK** button.

6. Select **Print LAN details** and press **OK** button.

   The printer starts printing the network setting information.

   The following information on the printer's network setting is printed out. (Some setting values are not displayed depending on the printer settings.)

Item Number	Item	Description	Setting
1	Product Information	Product information	–
1-1	Product Name	Product name	XXXXXXXX
1-2	ROM Version	ROM version	XXXXXXXX
1-3	Serial Number	Serial number	XXXXXXXX
2	Network Diagnostics	Network diagnostics	—
2-1	Diagnostic Result	Diagnostic result	XXXXXXXX
2-2	Result Codes	Result codes	XXXXXXXX
2-3	Result Code Details	Result code details	http://canon.com/ijnwt
3	Wireless LAN	Wireless LAN	Enable/Disable
3-2	Infrastructure	Infrastructure	Enable/Disable
3-2-1	Signal Strength	Signal strength	0 to 100 [%]
3-2-2	Link Quality	Link quality	0 to 100 [%]

3-2-3	Frequency	Frequency	XX (GHz)
3-2-4	MAC Address	MAC address	XX:XX:XX:XX:XX:XX
3-2-5	Connection	Connection status	Active/Inactive
3-2-6	SSID	SSID	Wireless LAN SSID
3-2-7	Channel	Channel	XX (1 to 13)
3-2-8	Encryption	Encryption method	None/WEP/TKIP/AES
3-2-9	WEP Key Length	WEP key length (bits)	Inactive/128/64
3-2-10	Authentication	Authentication method	None/auto/open/shared/WPA-PSK/WPA2-PSK
3-2-11	TCP/IPv4	TCP/IPv4	Enable
3-2-12	IP Address	IP address	XXX.XXX.XXX.XXX
3-2-13	Subnet Mask	Subnet mask	XXX.XXX.XXX.XXX
3-2-14	Default Gateway	Default gateway	XXX.XXX.XXX.XXX
3-2-15	TCP/IPv6	TCP/IPv6	Enable/Disable
3-2-16	Link Local Address	Link local address	XXXX:XXXX:XXXX:XXXX XXXX:XXXX:XXXX:XXXX
3-2-17	Link Local Prefix Length	Link local prefix length	XXX
3-2-18	Stateless Address1	Stateless address 1	XXXX:XXXX:XXXX:XXXX XXXX:XXXX:XXXX:XXXX
3-2-19	Stateless Prefix Length1	Stateless prefix length 1	XXX
3-2-20	Stateless Address2	Stateless address 2	XXXX:XXXX:XXXX:XXXX XXXX:XXXX:XXXX:XXXX
3-2-21	Stateless Prefix Length2	Stateless prefix length 2	XXX
3-2-22	Stateless Address3	Stateless address 3	XXXX:XXXX:XXXX:XXXX XXXX:XXXX:XXXX:XXXX
3-2-23	Stateless Prefix Length3	Stateless prefix length 3	XXX
3-2-24	Stateless Address4	Stateless address 4	XXXX:XXXX:XXXX:XXXX XXXX:XXXX:XXXX:XXXX
3-2-25	Stateless Prefix Length4	Stateless prefix length 4	XXX

3-2-26	Default Gateway1	Default gateway 1	XXXX:XXXX:XXXX:XXXX XXXX:XXXX:XXXX:XXXX
3-2-27	Default Gateway2	Default gateway 2	XXXX:XXXX:XXXX:XXXX XXXX:XXXX:XXXX:XXXX
3-2-28	Default Gateway3	Default gateway 3	XXXX:XXXX:XXXX:XXXX XXXX:XXXX:XXXX:XXXX
3-2-29	Default Gateway4	Default gateway 4	XXXX:XXXX:XXXX:XXXX XXXX:XXXX:XXXX:XXXX
3-2-33	IPsec	IPsec setting	Active
3-2-34	Security Protocol	Security method	ESP/ESP & AH/AH
3-3	Wireless Direct	Operation mode for Wireless Direct	Enable/Disable
3-3-1	MAC Address	MAC address	XX:XX:XX:XX:XX:XX
3-3-2	Connection	Connection status	Active/Inactive
3-3-3	SSID	SSID	Wireless Direct SSID
3-3-4	Password	Password	Wireless Direct password (10 alphanumeric characters)
3-3-5	Channel	Channel	3
3-3-6	Encryption	Encryption method	AES
3-3-7	Authentication	Authentication method	WPA2-PSK
3-3-8	TCP/IPv4	TCP/IPv4	Enable
3-3-9	IP Address	IP address	XXX.XXX.XXX.XXX
3-3-10	Subnet Mask	Subnet mask	XXX.XXX.XXX.XXX
3-3-11	Default Gateway	Default gateway	XXX.XXX.XXX.XXX
3-3-12	TCP/IPv6	TCP/IPv6	Enable/Disable
3-3-13	Link Local Address	Link local address	XXXX:XXXX:XXXX:XXXX XXXX:XXXX:XXXX:XXXX
3-3-14	Link Local Prefix Length	Link local prefix length	XXX
3-3-15	IPsec	IPsec setting	Active
3-3-16	Security Protocol	Security method	–
5	Other Settings	Other settings	–
5-1	Printer Name	Printer name	Printer name (Up to 15 alphanumeric characters)

5-2	Wireless Direct Dev-Name	Device name for wireless direct	Device name for wireless direct (Up to 32 alphanumeric characters)
5-4	WSD Printing	WSD printing setting	Enable/Disable
5-5	WSD Timeout	Timeout	1/5/10/15/20 [min]
5-6	LPD Printing	LPD printing setting	Enable/Disable
5-7	RAW Printing	RAW printing setting	Enable/Disable
5-9	Bonjour	Bonjour setting	Enable/Disable
5-10	Bonjour Service Name	Bonjour service name	Bonjour service name (Up to 52 alphanumeric characters)
5-11	LLMNR	LLMNR setting	Enable/Disable
5-12	SNMP	SNMP setting	Enable/Disable
5-14	DNS Server	Obtain DNS server address automatically	Auto/Manual
5-15	Primary Server	Primary server address	XXX.XXX.XXX.XXX
5-16	Secondary Server	Secondary server address	XXX.XXX.XXX.XXX
5-17	Proxy Server	Proxy server setting	Enable/Disable
5-18	Proxy Address	Proxy address	XXXXXXXXXXXXXXXXXXXX
5-19	Proxy Port	Proxy port specification	1 to 65535
5-20	Cert. Fingerprt(SHA-1)	Certificate fingerprint(SHA-1)	XXXXXXXX XXXXXXXX XXXXXXXX XXXXXXXX XXXXXXXX
5-21	Cert. Fingerprt(SHA-256)	Certificate fingerprint(SHA-256)	XXXXXXXX XXXXXXXX XXXXXXXX XXXXXXXX XXXXXXXX XXXXXXXX XXXXXXXX XXXXXXXX

("XX" represents alphanumeric characters.)

Reconfiguration Method of Wireless LAN Connection

Follow either procedure below to change wireless LAN connection method (infrastructure or Wireless Direct).

- **For Windows:**
  - Redo setup using the Setup CD-ROM or from the web page.
  - Perform settings on the **Network Settings** screen on IJ Network Device Setup Utility.

Important

- Before you perform settings using IJ Network Device Setup Utility, turn on Easy wireless connect mode on the printer following the procedure below.
  1. Make sure printer is turned on.
  2. Press **Setup** button.

     The **Setup menu** screen appears.
  3. Select **Wireless LAN setup** and press **OK** button.
  4. Select **Easy WL connect** and press **OK** button.

     Follow instructions on your smartphone or tablet.
  5. If message saying setup is completed appears, press **OK** button.

- **For macOS:**

  Redo setup from the web page.

Handling Paper, Originals, Ink Tanks, etc.

- Loading Paper
- Loading Originals
- Refilling Ink Tanks

Loading Paper

- Loading Plain Paper / Photo Paper
- Loading Envelopes

Loading Plain Paper / Photo Paper

You can load plain paper or photo paper.

Important

- If you cut plain paper into small size such as 4" x 6" (10 x 15 cm), 5" x 7" (13 x 18 cm), 127 x 127 mm or Business Cards to perform trial print, it can cause paper jams.

Note

- We recommend Canon genuine photo paper for printing photos.

  For details on the Canon genuine paper, see Supported Media Types.
- You can use general copy paper or Canon Red Label Superior WOP111/Canon Océ Office Colour Paper SAT213.

  For the page size and paper weight you can use for this printer, see Supported Media Types.

1. Prepare paper.

   Align the edges of paper. If paper is curled, flatten it.

   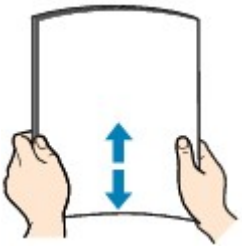

   Note

   - Align the edges of paper neatly before loading. Loading paper without aligning the edges may cause paper jams.
   - If paper is curled, hold the curled corners and gently bend them in the opposite direction until the paper becomes completely flat.

     For details on how to flatten curled paper, see Check3 in Paper Is Smudged / Printed Surface Is Scratched.

2. Load paper.

   1. Open the paper support (A) and paper support extension (B).

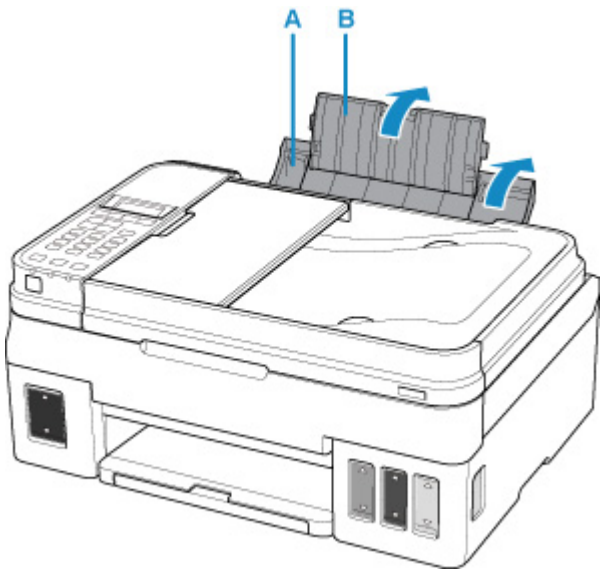

2. Pull out the paper output tray (C) and open the output tray extension (D).

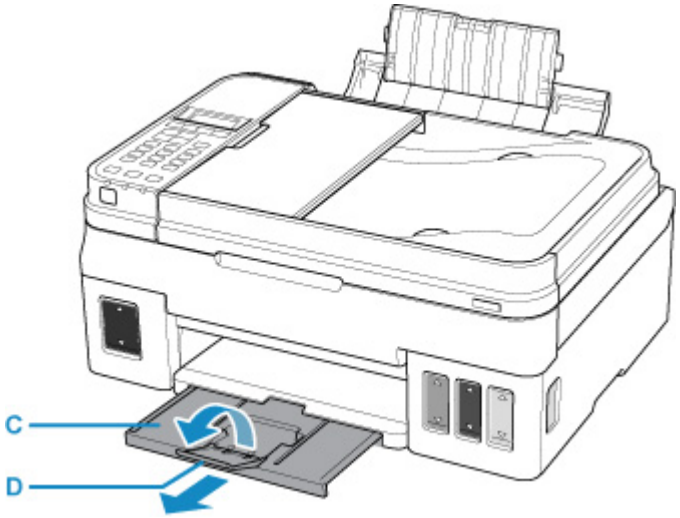

3. Load paper WITH THE PRINT SIDE FACING UP.

4. Align the paper guides (E) with the paper width.

   Do not slide the paper guides too hard against the paper. The paper may not be fed properly.

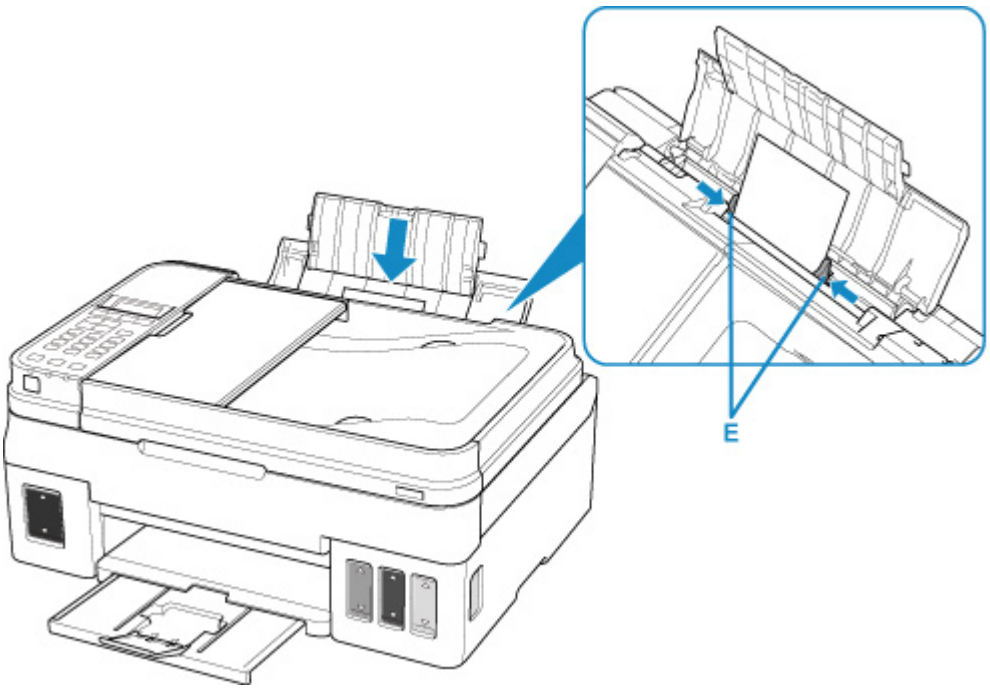

Important

- Always load paper in the portrait orientation (F). Loading paper in the landscape orientation (G) can cause paper jams.

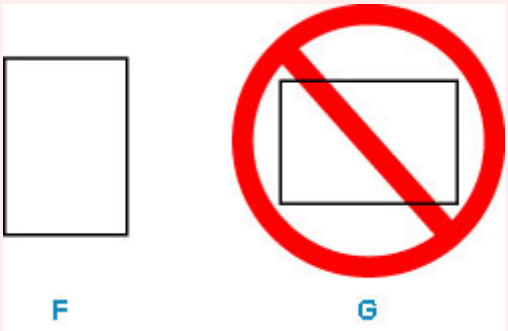

Note

- Do not load sheets of paper higher than the load limit mark (H).

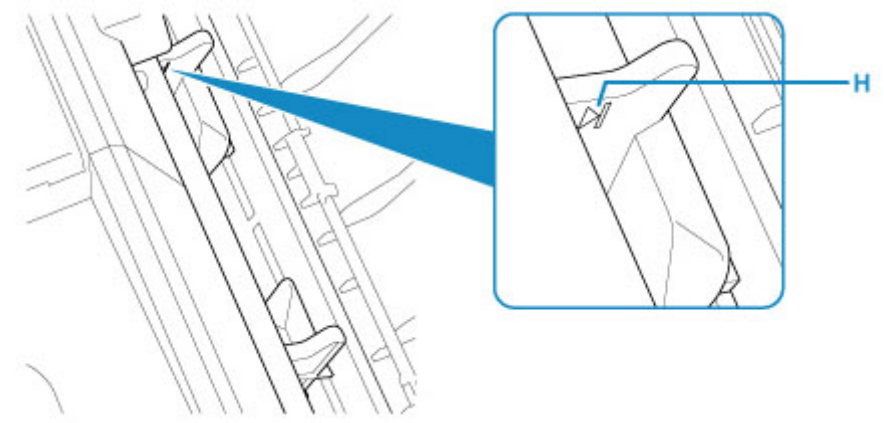

After loading paper on the rear tray, the paper information registration screen for the rear tray is displayed on the LCD.

5. Press the **OK** button.

```
Register the rear tray pa
[OK]Next
```

6. Use the ◄ ► button to select the size of the loaded paper on the rear tray, then press the **OK** button.

```
Size:   ◄   2L/5"x7"   ►
Type:     *Plain paper
```

Note

- The * (asterisk) on the LCD indicates the current setting.

7. Use the ◄ ► button to select the type of the loaded paper on the rear tray, then press the **OK** button.

```
Size:       2L/5"x7"
Type:   ◄    Glossy    ►
```

Note

- When printing, select the size and type of the loaded paper on the print settings screen of the computer.
  - There are various types of paper, such as paper with a special surface coating for printing photos at optimal quality and paper suitable for documents. Each media type has specific preset settings (how ink is used and sprayed, distance from nozzles, etc.), that allow you to print to that type with optimal image quality. The wrong paper settings may cause poor printout color quality or scratches on the printed surface. If you notice blurring or uneven colors, increase the print quality setting and try printing again.

Loading Envelopes

You can load Envelope DL and Envelope Com 10.

The address is automatically rotated and printed according to the envelope's direction by specifying on the computer properly.

Important

- Printing of envelopes from the operation panel is not supported.
- Do not use the following envelopes. They could jam in the printer or cause the printer to malfunction.
  - Envelopes with an embossed or treated surface
  - Envelopes with a double flap
  - Envelopes whose gummed flaps are already moistened and adhesive

1. Prepare envelopes.
   - Press down on all four corners and edges of the envelopes to flatten them.

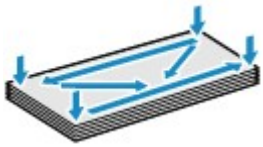

   - If the envelopes are curled, hold the opposite corners and gently twist them in the opposite direction.

   - If the corner of the envelope flap is folded, flatten it.
   - Use a pen or the like to press the leading edge in the inserting direction flat and sharpen the crease.

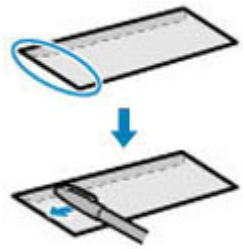

   The figures above show a side view of the leading edge of the envelope.

Important

- The envelopes may jam in the printer if they are not flat or the edges are not aligned. Make sure that no curl or puff exceeds 0.12 inch (3 mm).

2. Load envelopes.

1. Open the paper support (A) and paper support extension (B).

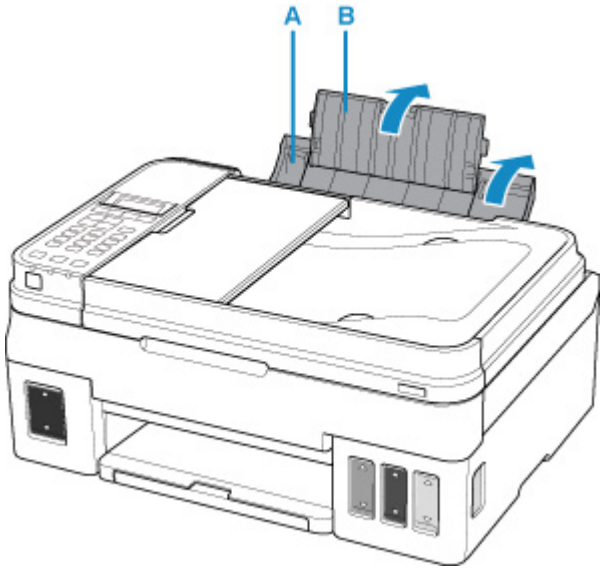

2. Pull out the paper output tray (C) and open the output tray extension (D).

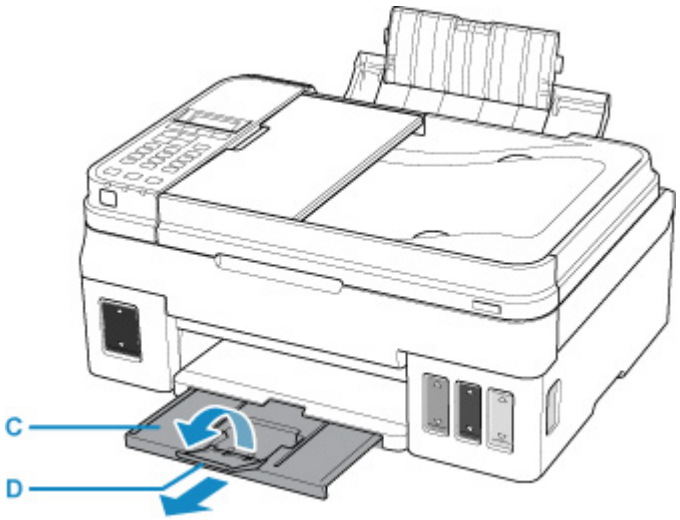

3. Load envelopes WITH THE PRINT SIDE FACING UP.

   Up to 10 envelopes can be loaded at once.

   Fold flap of the envelope and load the envelope in the portrait orientation with the address side facing up.

4. Align the paper guides (E) with the envelope width.

   Do not slide the paper guides too hard against the envelopes. The envelopes may not be fed properly.

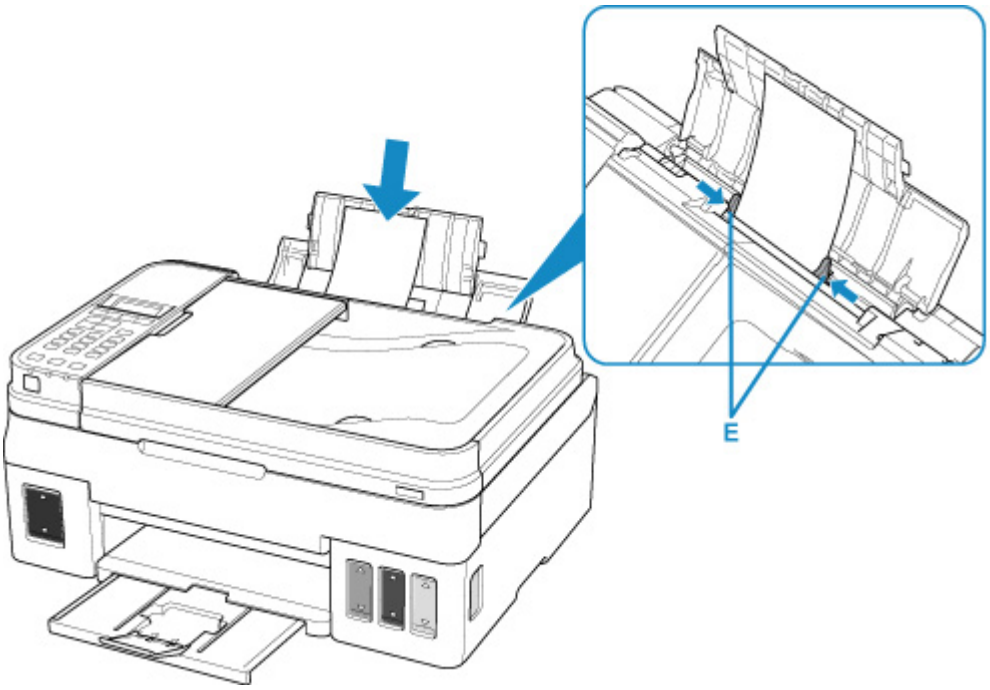

Note

- Do not load envelopes higher than the load limit mark (F).

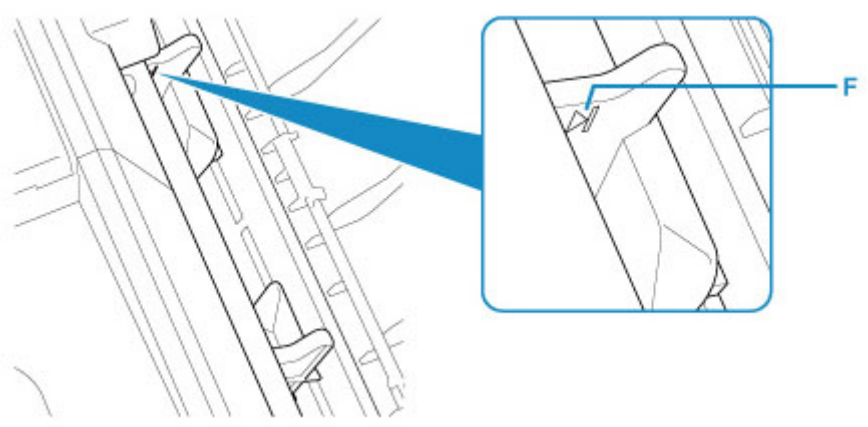

After loading paper on the rear tray, the paper information registration screen for the rear tray is displayed on the LCD.

5. Press the **OK** button.

```
Register the rear tray pa
[OK]Next
```

6. Use the ◄ ► button to select the size of the loaded envelopes on the rear tray, then press the **OK** button.

```
Size:   ◄ Envelope DL ►
Type:     *Plain paper
```

Note

- The ★ (asterisk) on the LCD indicates the current setting.

7. Use the ◄ ► button to select **Envelope**, then press the **OK** button.

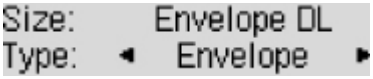

Note

- When printing, select the type of envelope and orientation of printing on the print settings screen of the computer.

Loading Originals

- Where to Load Originals
- Loading Originals on the Platen Glass
- Loading Documents in the ADF (Auto Document Feeder)
- Loading Based on Use
- Supported Originals

Where to Load Originals

The printer has two positions to load originals: platen glass and ADF (Auto Document Feeder).

Select the position to load the original according to the size, type, or usage.

Note

- For details on the supported originals, see below.
  - Supported Originals

Loading Documents, Photos, or Book on the platen glass

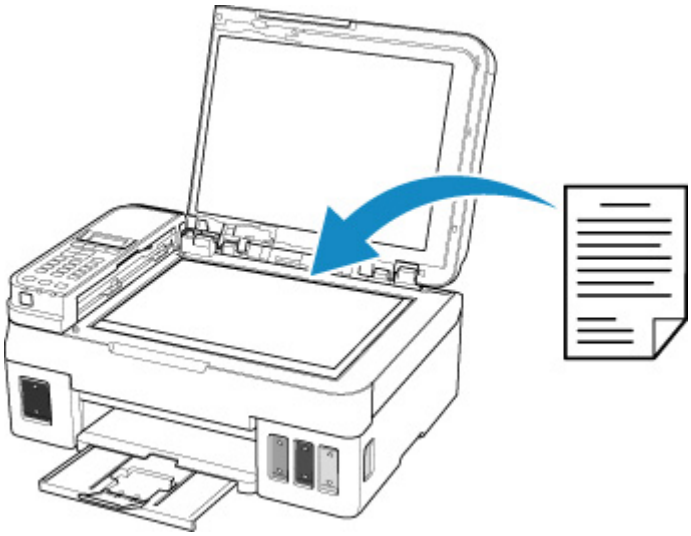

Loading Two or More Sheets of Document of the Same Size and Thickness in the ADF

You can also load a sheet of document in the ADF.

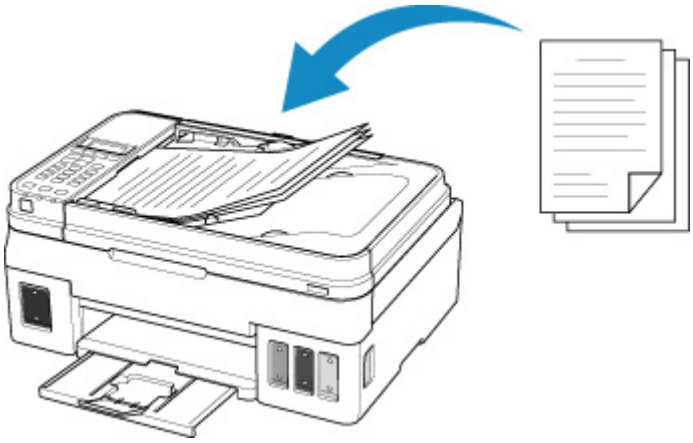

Note

- To scan the original at optimum quality, load it on the platen glass.

Loading Originals on the Platen Glass

1. Open the document cover.

2. Load the original WITH THE SIDE TO SCAN FACING DOWN on the platen glass.

   Align the corner of the original with the alignment mark .

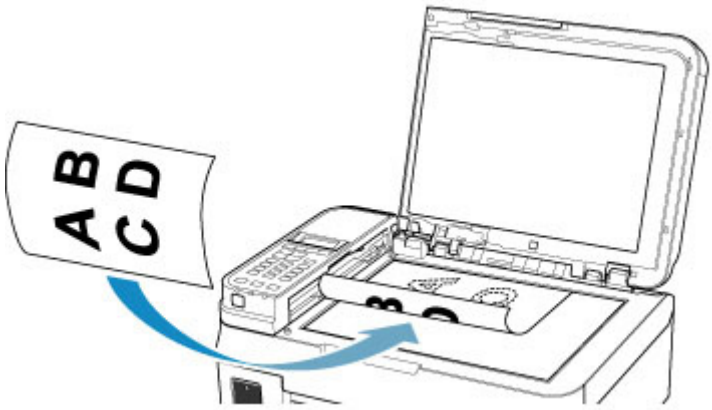

Important

- Be sure to observe the following when loading the original on the platen glass. Failure to observe the following may cause the scanner to malfunction or the platen glass to break.
  - Do not place any objects weighing 4.4 lb (2.0 kg) or more on the platen glass.
  - Do not put any pressure of 4.4 lb (2.0 kg) or more on the platen glass, such as pressing down the original.

3. Close the document cover gently.

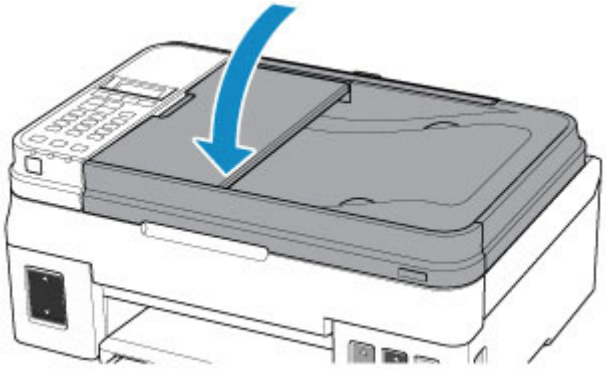

Important

- After loading the original on the platen glass, be sure to close the document cover before starting to copy, scan or fax.

Loading Documents in the ADF (Auto Document Feeder)

Note

- To scan a document at optimum quality, load it on the platen glass.

1. Make sure that any original has been removed from the platen glass.

2. Open the document tray.

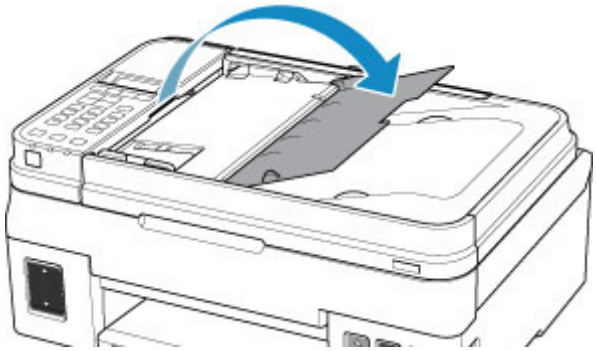

3. Insert the document in the document tray until you hear a beep sound.

   Load the document WITH THE SIDE TO SCAN FACING UP in the document tray.

   Note

   - For details on the supported originals, see below.

     Supported Originals

   - When you set the alarm to be silent in **Sound control** of **Dev. user settings**, the alarm will not beep even if the document is inserted in the document tray.

     Sound control

4. Adjust the document guide (A) to match the width of the document.

   Do not slide the document guide too hard against the document. The document may not be fed properly.

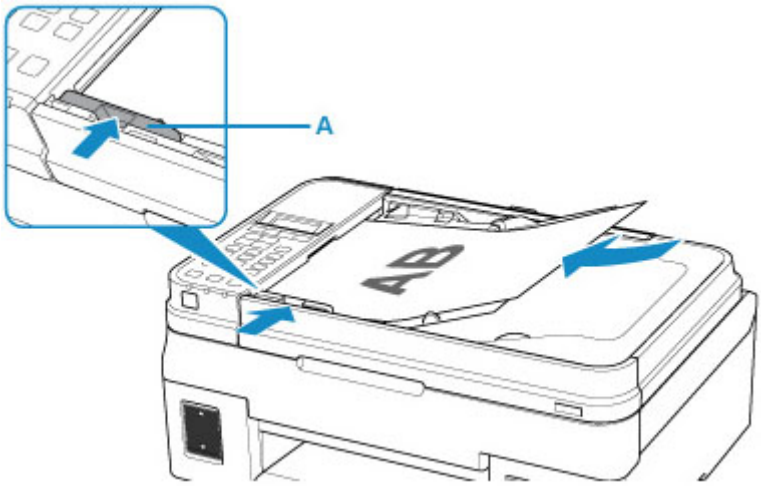

Loading Based on Use

Load the original in the correct position on the platen glass according to the function to use. If you do not load the original correctly, it may not be scanned properly.

Originals	Function	How to Load
Magazines, Newspapers, and Documents	**Copying or Faxing**	Loading the Original to Be Aligned with the Alignment Mark
	Scanning by detecting the type and size of the original automatically If you scan using the operation panel, press the **SCAN** button, press the **Menu** button, and select **Auto scan** for **Document type**.	
	Scanning by specifying a standard size (A4, Letter, etc.) If you scan using the operation panel, press the **SCAN** button, press the **Menu** button, select **Document** or **Photo** for **Document type** and specify a standard size (A4, Letter, etc.) for **Scan size**.	
Photos, Postcards, Business Cards, and Disc (BD/DVD/CD)	**Scanning only one original** If you scan using the operation panel, follow the operation below. • Press the **SCAN** button, press the **Menu** button, and select **Auto scan** for **Document type**. • Press the **SCAN** button, press the **Menu** button, select **Photo** for **Document type** and specify **Auto scan(A) - Singl** for **Scan size**.	Loading in the Center of the Platen Glass
	Scanning two or more originals If you scan using the operation panel, follow the operation below. • Press the **SCAN** button, press the **Menu** button, and select **Auto scan** for **Document type**. • Press the **SCAN** button, press the **Menu** button, select **Photo** for **Document type** and specify **Auto scan(A) - Multi** for **Scan size**.	Loading Two or More Originals

Note

- For details on how to scan from the computer and how to load originals, see below.

  Scanning from Computer (Windows)

Loading the Original to Be Aligned with the alignment mark

Place the original WITH THE SIDE TO SCAN FACING DOWN on the platen glass and align it with the alignment mark. Portions placed on the diagonally striped area cannot be scanned.

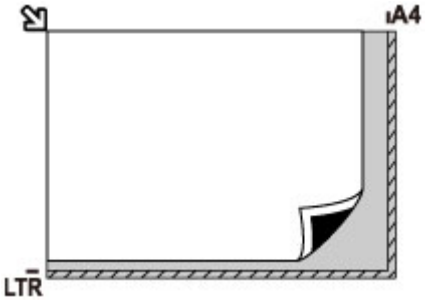

Important

- The printer cannot scan the striped area (A) (0.04 inch (1 mm) from the edges of the platen glass).

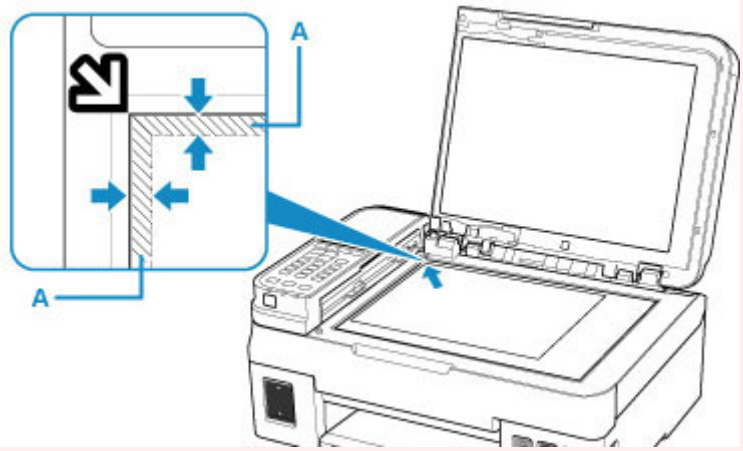

Loading Only One Original in the Center of the platen glass

Place the original WITH THE SIDE TO SCAN FACING DOWN, with 0.40 inch (1 cm) or more space between the edges (diagonally striped area) of the platen glass. Portions placed on the diagonally striped area cannot be scanned.

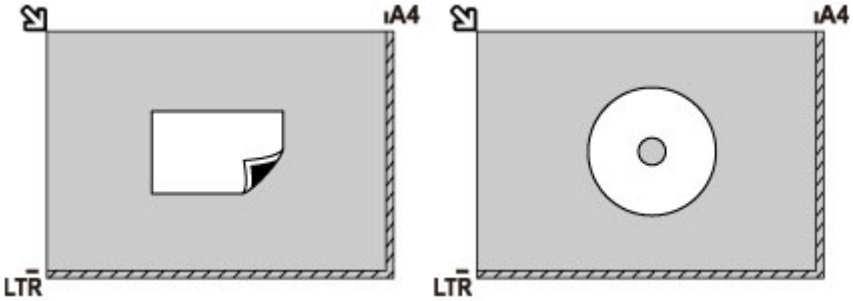

Loading Two or More Originals on the platen glass

Place the originals WITH THE SIDE TO SCAN FACING DOWN. Allow 0.40 inch (1 cm) or more space between the edges (diagonally striped area) of the platen glass and the originals, and between the originals. Portions placed on the diagonally striped area cannot be scanned.

You can place up to 12 items.

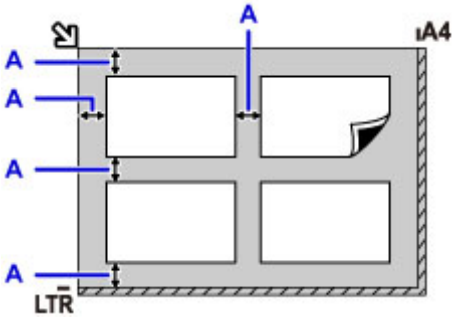

A: More than 0.40 inch (1 cm)

Note

- The Skew Correction function automatically compensates for the originals placed at an angle of up to approximately 10 degrees. Slanted photos with a long edge of 7.1 inches (180 mm) or more cannot be corrected.
- Non-rectangular or irregular shaped photos (such as cut out photos) may not be scanned properly.

Supported Originals

Platen Glass

Item	Details
Types of originals	- Text document, magazine, or newspaper - Printed photo, postcard, business card, or disc (BD/DVD/CD, etc.) - Documents that are not suitable for the ADF
Size (width x height)	Max. 8.5 x 11.7 inches (216 x 297 mm)
Quantity	One or more sheets*
Thickness	Max. 0.2 inch (5 mm)

* Two or more originals can be loaded on the platen glass depending on the selected function.

Loading Based on Use

In the ADF (Auto Document Feeder)

Item	Details
Kind of original	Plain-paper documents with multiple pages of the same size, thickness, and weight
Size	A4, Letter, Legal 2-on-1/4-on-1 copying: A4/Letter only
Quantity	- A4/Letter: Max. 20 sheets (20 lb. (75 g /m^2) paper), up to 0.08 inch (2 mm) high - Legal: Max. 5 sheets (20 lb. (75 g /m^2) paper), up to 0.02 inch (0.5 mm) high
Thickness	0.003 to 0.005 inch (0.07 to 0.13 mm)
Weight	16.0 to 25.3 lb. (60 to 95 g /m^2)

Note

- Make sure any liquids on documents, such as glue, ink, or correction fluid are dry before loading.

  Do not load glued documents in the ADF, even if the glue is dry, because this may cause paper jams.
- Remove all staples, paper clips, or other fasteners before feeding documents.
- Load Legal-sized documents in the ADF.
- Do not load these kinds of documents in the ADF, which may cause paper jams.
  - Wrinkled or creased documents
  - Curled documents
  - Torn documents
  - Documents with holes
  - Glued documents
  - Documents with sticky notes
  - Documents on carbon paper

- Documents on coated paper
- Documents on onion skin or other thin paper
- Photos or excessively thick documents

Refilling Ink Tanks

- Refilling Ink Tanks
- Checking Ink Level
- Ink Tips

Refilling Ink Tanks

Check the remaining ink level with the ink tank indicator on the front of the printer. If the ink level is near the lower limit line (A), refill the ink tank.

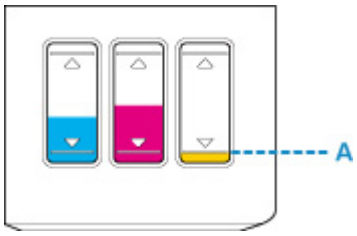

Note

- If the function for notifying the remaining ink level (remaining ink level notification function) is enabled, resetting the remaining ink level count is required before refilling ink tanks.

  There are two ways to reset the remaining ink level count.

  - Resetting the remaining ink level count when a remaining ink error occurs
  - Resetting the remaining ink level count when a remaining ink error has not occurred

  The error message appears on the LCD when a remaining ink error occurs.

  If remaining ink level notification function is enabled

- If print results become faint or white streaks appear despite sufficient ink levels, see Maintenance Procedure.
- For precautionary notes on handling ink bottles, see Notes on ink bottles.

Refilling Procedure

When you refill ink tanks, follow the steps below.

Important

- Please ensure the printer remains flat after initial setup and is NOT turned upside down or on its side, as ink in the printer may leak.
- If the remaining ink level notification function is enabled, refill all four ink tanks until full. If the remaining ink level count is reset when the ink tanks are not full, the printer cannot detect the ink level correctly.

  If remaining ink level notification function is enabled

1. Make sure that the power is turned on.

2. Open the scanning unit / cover (B).

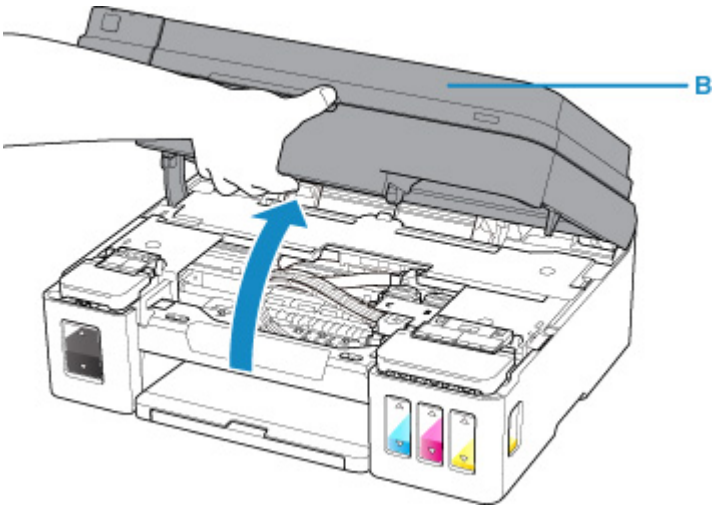

Important

- Do not touch tubes or other parts inside the printer. This can cause trouble with the printer.

3. Open the ink tank cover.

   To refill the black ink tank, open the left ink tank cover (C).

   To refill color ink tanks, open the right ink tank cover (D).

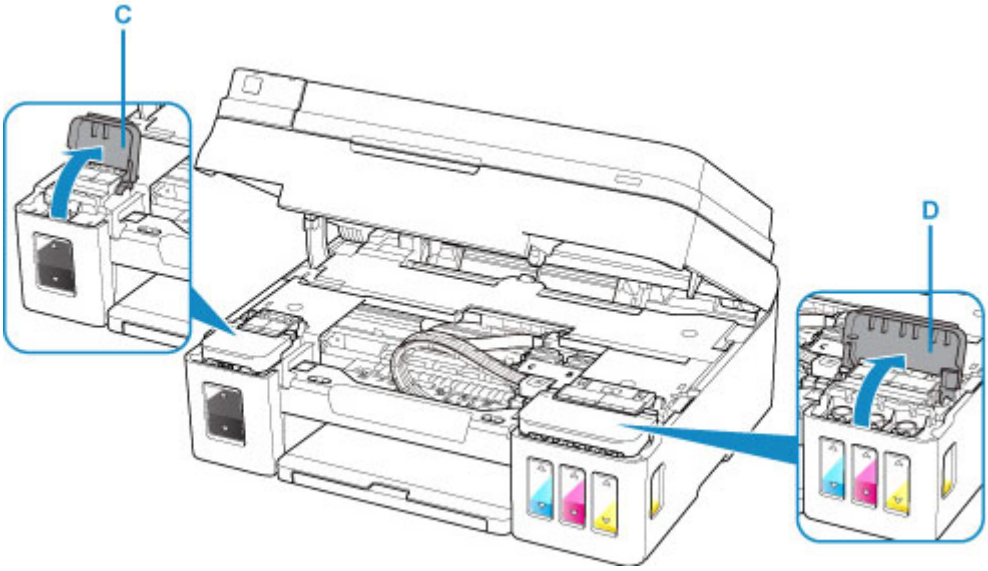

4. Grab and remove the tank cap (E) of the ink tank to be refilled.

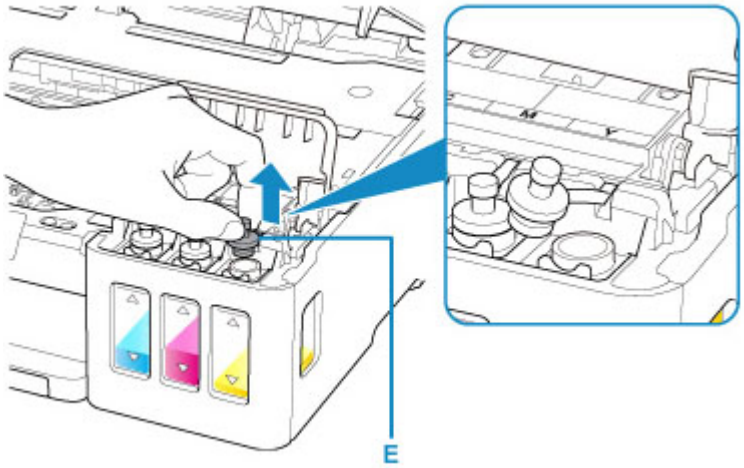

Important

- Carefully remove the tank cap of the ink tank. Ink on the inside of the tank cap may spatter when removing it.

5. Take a new ink bottle out of its package.

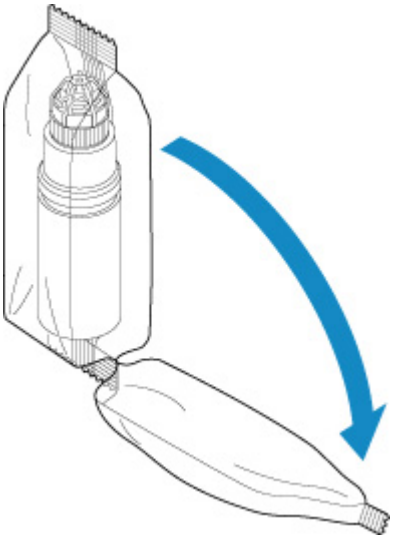

6. Hold the ink bottle upright and twist the bottle cap (F) to remove.

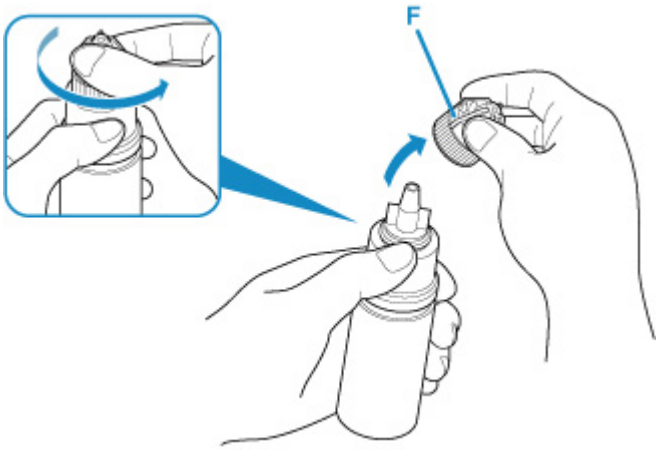

Important

- When removing the bottle cap, avoid squeezing the sides of the ink bottle. Hold the ink bottle as shown in the figure above. If you push the sides of the ink bottle, ink will spatter.
- Do not shake the ink bottle. Ink may spatter when opening the cap.
- Even if the ink bottle is dented, the ink contained in the bottle can still be used without problem.

7. Refill the ink tank.

Aligning the nozzle of the ink bottle with the bottle guide (G) on the printer, insert the nozzle into the inlet (H).

Next stand the ink bottle upside down and squeeze the sides of the ink bottle to refill the ink tank.

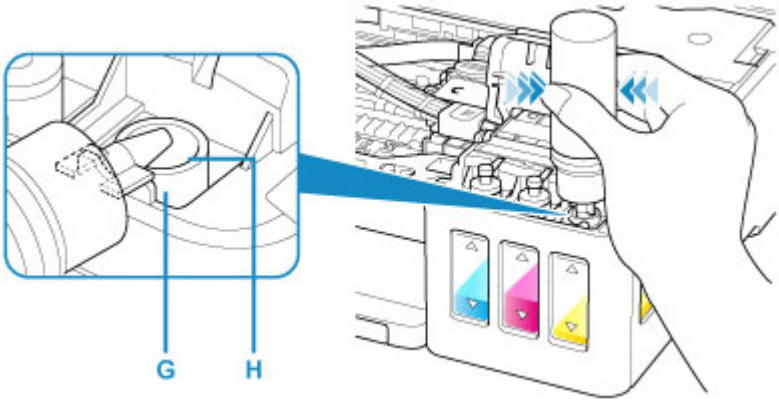

Important

- Make sure that each color of ink tanks is filled with corresponding color of ink bottles.
- When refilling ink tanks, do not squeeze the bottle sides too hard. Ink may spatter.
- Do not fill the ink tank above the ink tank's upper limit line (I). Ink above this line may spill over, causing malfunction or damage to the printer, and preventing the printing operation.

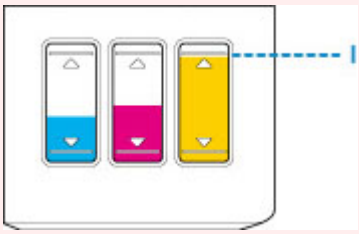

- After refilling ink tanks, close the bottle cap of the ink bottle securely.
- Discard empty ink bottles in compliance with local laws and regulations regarding disposal of consumables.

8. Recap the inlet with the tank cap of the ink tank.

Make sure the tank cap is completely inserted.

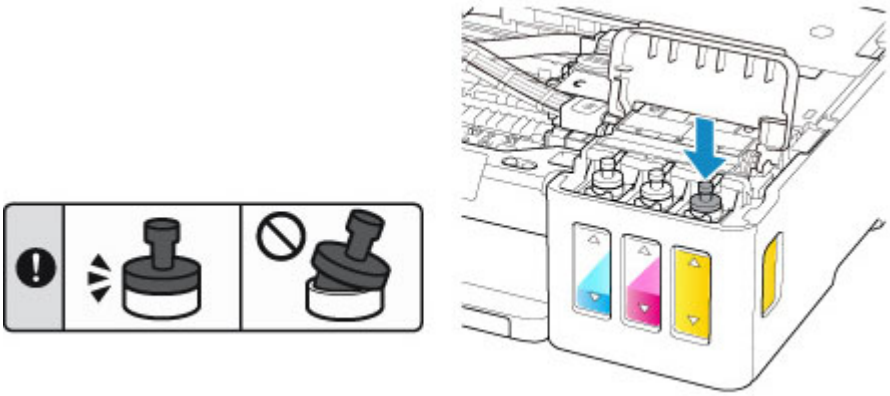

Note

- When inserting the tank cap, be careful not to twist the tank cap rubber.

9. Close the ink tank cover.

Important

- If you cannot properly close the ink tank cover, check if you forgot to insert any tank caps of the ink tanks.

10. Close the scanning unit / cover gently.

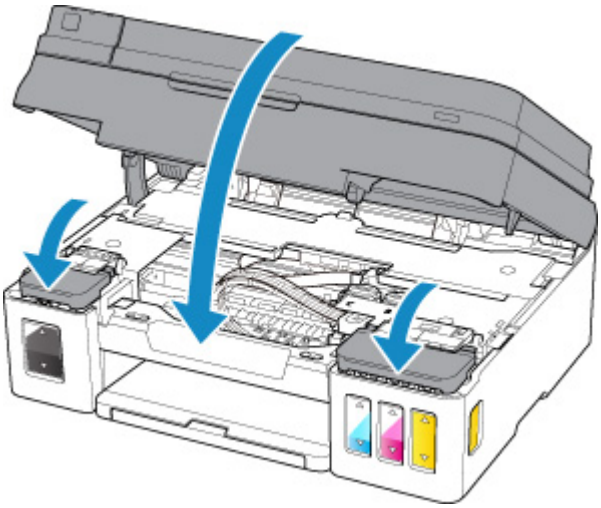

Note

- If the error message appears on the LCD, take appropriate action.

  An Error Occurs

- The printer may make noise during operation.

If remaining ink level notification function is enabled

Resetting the remaining ink level count when a remaining ink error occurs

If the remaining ink level notification function is enabled, **Check the ink tanks** and the color indicator (BK/C/M/Y) of ink that runs low appear on the LCD when ink runs low. This function is enabled by default.

```
Check the ink tanks
BK C M Y     [OK]Next
```

Important

- The color of ink that is seen as fewest remaining amount when you visually inspect the remaining ink may not match with the color indicator appears on the LCD.

After pressing the **OK** button, **Do you want to refill the ink tanks?** appears.

```
Do you want to refill the
 <  Yes  >      No
```

- To continue enabling the remaining ink level notification function
  - If you refill the ink tanks of all colors:
    1. Use the ◄► button to select **Yes** and then press the **OK** button.
    2. Refill the ink tanks of all colors to the upper limit line and then press the **OK** button.

       Are all the ink tanks refilled to the upper limit line? appears.

       ```
       Are all the ink tanks refi
        <  Yes  >      No
       ```

    3. Use the ◄► button to select **Yes** and then press the **OK** button.

       The remaining ink level count of all colors are reset.
  - If you refill some ink tanks:

    Important

    - To continue enabling the remaining ink level notification function, refill the ink tank which ink runs low.

    Note

    - The ink tank of color other than the color of ink that runs low can be refilled at the same time.

    1. Use the ◄► button to select **Yes** and then press the **OK** button.
    2. Refill the ink tank that you want to refill to the upper limit line and then press the **OK** button.

       Are all the ink tanks refilled to the upper limit line? appears.

       ```
       Are all the ink tanks refi
        <  Yes  >      No
       ```

    3. Use the ◄► button to select **No** and then press the **OK** button.

       Is the BK ink refilled to the upper limit line? appears.

```
Is the BK ink refilled to
< Yes >      No
```

4. Use the ◄► button to select **Yes** or **No** and then press the **OK** button.
5. For C ink, M ink, and Y ink, perform the same operation as BK ink.

   The remaining ink level count of color that you selected **Yes** is reset.

   If you selected **No** for any colors, **If you continue, the remaining ink level notification function will be disabled** appears. Go to step 2 in To disable the remaining ink level notification function.

- To disable the remaining ink level notification function

1. Use the ◄► button to select **No** and then press the **OK** button.

   If you continue, the remaining ink level notification function will be disabled appears.

```
If you continue, the rema
[OK]Next
```

2. Press the **OK** button.

   To check the remaining ink level, visually inspect the remaining ink in the ink tank appears.

```
To check the remaining ir
[OK]Next
```

3. Press the **OK** button.

   Do you want to disable the remaining ink level notification function? appears.

```
Do you want to disable tl
< Yes >      No
```

4. Use the ◄► button to select **Yes** and then press the **OK** button.

   The remaining ink level notification function is disabled.

   If you select **No** and press the **OK** button, **For correct operation of the function, you must refill all ink tanks to the upper limit line** appears. After pressing the **OK** button once more, **Do you want to refill the ink tanks?** appears again.

Important

- If the remaining ink level notification function is disabled, visually inspect the remaining ink and refill the ink tanks as necessary. Continuing printing with ink below the lower limit line of an ink tank may prevent satisfactory print quality or may cause malfunction or damage to the printer.

Resetting the remaining ink level count when a remaining ink error has not occurred

If you refill the ink tank when remaining ink level notification function is enabled and when the remaining ink error has not occurred, resets the remaining ink level count after refilling the ink tank to the upper limit line.

- If you reset the remaining ink level count for all colors:

1. Make sure that printer is turned on.

2. Press the **Setup** button.
3. Use the ◀▶ button to select **Ink notification set.** and then press the **OK** button.
4. Use the ◀▶ button to select **Reset ink lev. count** and then press the **OK** button.

   The remaining ink level count will be reset for all colors; OK? appears.
5. Use the ◀▶ button to select **Yes** and then press the **OK** button.

   Are all the ink tanks refilled to the upper limit line? appears.
6. Refill the ink tanks of all colors to the upper limit line, use the ◀▶ button to select **Yes**, and press the **OK** button.

   The remaining ink level count of all colors are reset.

- If you reset the remaining ink level count for some colors:
  1. Make sure that printer is turned on.
  2. Press the **Setup** button.
  3. Use the ◀▶ button to select **Ink notification set.** and then press the **OK** button.
  4. Use the ◀▶ button to select **Reset ink lev. count** and then press the **OK** button.

     The remaining ink level count will be reset for all colors; OK? appears.
  5. Use the ◀▶ button to select **No** and then press the **OK** button.

     Do you want to reset the BK ink's remaining ink level count? appears.
  6. If you reset the remaining ink level count of BK ink, refill the BK ink tank to the upper limit line, use the ◀▶ button to select **Yes**, and press the **OK** button.

     If you do not reset the remaining ink level count of BK ink, select **No**, and press the **OK** button.
  7. For C ink, M ink, and Y ink, perform the same operation as BK ink.

     The remaining ink level count of color that you selected **Yes** is reset.

Important

- If you reset the remaining ink level count without refilling the ink tanks to the upper limit line, the remaining ink level cannot be detected correctly.

Note

- You can also set the remaining ink level notification function or reset the remaining ink level count from your computer.

  ■ Changing the remaining ink level notification setting

Notes on ink bottles

Important

- Keep out of reach of children.
- Do not drink ink.
- Be careful not to get any ink in your eyes or in your mouth. (In case of eye contact or swallowing, rinse with water and contact a doctor immediately).

- When you store ink bottles, close bottle caps completely and place bottles in standing position. If the ink bottles are laid down, ink may leak.
- When refilling ink tanks, take sufficient care to prevent ink from spattering onto surroundings.
- Ink may stain clothes or other belongings permanently. Washing may not remove ink stains.
- Do not use ink bottles and ink contained therein except to refill tanks of printers specified by Canon.
- Do not leave ink bottles in areas exposed to high temperature, such as near fire or a heater or in a car. Bottles may warp and cause ink leakage or ink may become poor quality.
- Do not subject ink bottles to impacts. Ink bottles may be damaged or bottle caps may come off by such impact, and ink may leak.
- Do not transfer ink to other containers. This may result in accidental ingestion, inappropriate use, or poor ink quality.
- Do not mix ink with water or other ink. This may damage the printer.
- Refill ink tanks quickly. Do not leave ink tanks with cap off.
- Once an ink bottle has been opened, do not leave it with bottle cap off. Ink will dry out, possibly preventing proper operation of the printer when an ink tank is refilled using this bottle.

Note

- Color ink may be consumed even when printing a black-and-white document or when black-and-white printing is specified. Every ink is also consumed in the standard cleaning and deep cleaning of the print head, which may be necessary to maintain the performance of the printer.

  When ink runs low, promptly refill it.

  Ink Tips

Checking Ink Level

Check ink level with the ink tank indicator on the front of the printer.

When ink reaches the upper limit line (A), ink is full.

When ink is near the lower limit line (B), ink is running low. Refill the ink tank.

Note

- To check the remaining ink level, visually inspect the remaining ink in the ink tank.

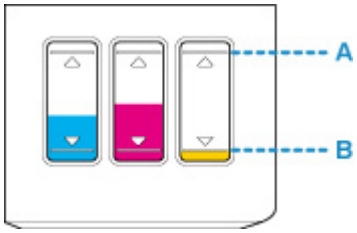

Important

- If printing is continued when the remaining ink level is below the lower limit line, the printer may consume a certain amount of ink to return to printable status and may also become damaged.

Note

- This printer has a function for notifying the remaining ink level, called the remaining ink level notification function. If you refill the ink tank when the remaining ink level notification function is enabled or when a remaining ink error occurs, refill the ink tank until ink reaches the upper limit line (A). If ink does not reach the upper limit line, the remaining ink level is not detected correctly.

  For details on the remaining ink level notification function, see below.

  Ink notification set.

- If a remaining ink error occurs, the error message appears on the LCD.

  An Error Occurs

- The remaining ink level notification function works from initial printing to the time when one of the inks reaches the lower limit line shown on the ink tank. For the remaining ink level notification function to work appropriately, each ink tank must be filled with entire contents of the corresponding color ink bottle bundled with the printer before printing. After the initial filling, if either of the ink tanks is refilled before the remaining ink level reaches the lower limit line, a significant error may occur in the accuracy of the remaining ink level notification function. If you want to refill an ink tank before the remaining ink level reaches the lower limit line, be sure to follow the procedure in the manual.
- To ensure you receive premium print quality and to help protect your print head, a certain amount of ink remains in the ink tank when the printer indicates to refill the ink tank. The estimated page yields of the ink bottle do not include this amount.
- Ink flows from the ink tanks to the inside of the printer. Ink may seem to run out fast due to this procedure when you start using the printer or after transporting it.

Ink Tips

How is ink used for various purposes other than printing?

Ink may be used for purposes other than printing.

During initial setup, some of the ink from the bundled ink bottles is used to fill the print head's nozzles to ensure the printer is print-ready.

Therefore, the page yield of the initial bundled set of ink bottles is lower than that of the subsequent sets of bottles.

To keep printer's performance, Canon printer performs cleaning automatically according to its condition. When the printer performs cleaning, a small amount of ink is consumed. In this case, all colors of ink may be consumed.

[Cleaning function]

The cleaning function helps the printer to suck air bubbles or ink itself from the nozzle and thus prevents print quality degradation or nozzle clogging.

Does black-and-white printing use color ink?

Black-and-white printing may use ink other than black ink depending on the type of printing paper or the settings on the computer. So, color ink is consumed even when printing in black-and-white.

Similarly, color inks are also consumed along with black ink during print head cleaning when Black is specified for cleaning.

Maintenance

- If Printing Is Faint or Uneven
- Performing Maintenance Functions from Your Computer (Windows)
- Performing Maintenance Functions from Your Computer (macOS)
- Cleaning

If Printing Is Faint or Uneven

- Maintenance Procedure
- Printing the Nozzle Check Pattern
- Examining the Nozzle Check Pattern
- Cleaning the Print Head
- Deep Print Head Cleaning
- Aligning the Print Head

Maintenance Procedure

If print results are blurred, colors are not printed correctly, or print results are unsatisfactory (e.g. misaligned printed ruled lines), perform the maintenance procedure below.

Important

- Do not rinse or wipe the print head. This can cause trouble with the cartridge.

Note

- Check if ink remains in the ink tanks.
  - Checking Ink Level
- If the error message appears on the LCD, see An Error Occurs.
- Changing settings on the computer may improve the print result.
  - For Windows:
    - Changing the Print Quality and Correcting Image Data

When the Print Results Are Blurred or Uneven:

Step1 Print the nozzle check pattern.

From the printer

- Printing the Nozzle Check Pattern

From the computer

- For Windows:
  - Printing a Nozzle Check Pattern
- For macOS:
  - Printing a Nozzle Check Pattern

Step2 Examine the nozzle check pattern.

If there are missing lines or horizontal white streaks in the pattern:

Step3 Clean the print head.

From the printer

- Cleaning the Print Head

From the computer

- For Windows:
  - Cleaning
- For macOS:
  - Cleaning

After cleaning the print head, print and examine the nozzle check pattern: ➡ Step1

If the problem is not resolved after performing from step 1 to step 3 twice:

Step4 Clean the print head deeply.

From the printer

- Deep Print Head Cleaning

From the computer

- For Windows:
  - Deep Cleaning
- For macOS:
  - Deep Cleaning

After deep print head cleaning, print and examine the nozzle check pattern: ➡ Step1

If the problem is not resolved after performing step 4, perform ink flush.

Ink flush consumes a great amount of ink. Frequent ink flush can rapidly consume ink, so perform ink flush only when necessary.

Important

- If ink flush is performed when the remaining ink level is insufficient, it may cause a failure. Be sure to check the remaining ink level before performing ink flush.

From the printer

- Performing Ink Flush

From the computer

- For Windows:
  - Ink Flush

If the problem is still not resolved, the print head may be damaged. Contact the service center.

When the Print Results Are Not Even such as the Ruled Lines Are Misaligned:

Step Align the print head.

From the printer

- Aligning the Print Head

From the computer

- For Windows:
  - Adjusting Print Head Position
- For macOS:

Adjusting Print Head Position

Printing the Nozzle Check Pattern

Print the nozzle check pattern to determine whether the ink ejects properly from the print head nozzle.

Note

- If the remaining ink level is low, the nozzle check pattern will not be printed correctly. If the remaining ink level is low, refill ink tanks.

You need to prepare: a sheet of A4 or Letter-sized plain paper

1. Make sure that the power is turned on.

2. Load a sheet of A4 or Letter-sized plain paper on the rear tray.

   After loading paper on the rear tray, the paper information registration screen appears on the LCD. Select **A4** or **Letter** for **Size:** and **Plain paper** for **Type:** and then press the **OK** button.

3. Pull out the paper output tray and open the output tray extension.

4. Press the **Setup** button, use the ◄ ► button to select **Maintenance**, and press the **OK** button.

   LCD and Operation Panel

5. Use the ◄ ► button to select **Nozzle check** and then press the **OK** button.

   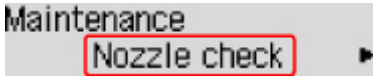

   The nozzle check pattern will be printed.

   Do not perform any other operations until the printer completes the printing of the nozzle check pattern.

6. Examine the nozzle check pattern.

Examining the Nozzle Check Pattern

Examine the nozzle check pattern, and clean the print head if necessary.

1. Check if there are missing lines in the pattern (A) or horizontal white streaks in the pattern (B).

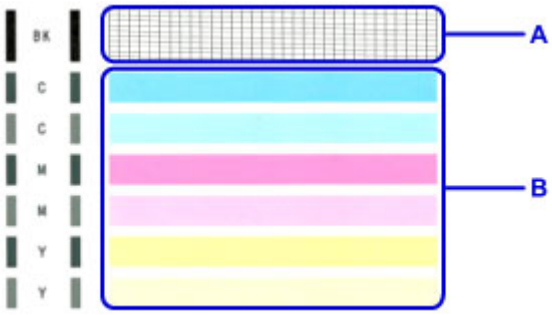

If there are missing lines in the pattern (A):

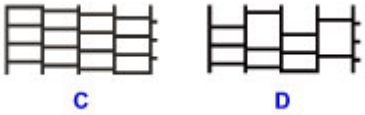

(C) Good
(D) Bad (lines are missing)

If there are horizontal white streaks in the pattern (B):

(E) Good
(F) Bad (horizontal white streaks are present)

If any color in the pattern (A) or the pattern (B) is not printed:

(Example: Magenta pattern is not printed)

If one of the above is applied, cleaning the print head is required.

Cleaning the Print Head

Clean the print head if lines are missing or if horizontal white streaks are present in the printed nozzle check pattern. Cleaning unclogs the nozzles and restores the print head condition. Cleaning the print head consumes ink, so clean the print head only when necessary.

1. Make sure that the power is turned on.

2. Press the **Setup** button, use the ◄ ► button to select **Maintenance**, and press the **OK** button.

   LCD and Operation Panel

3. Use the ◄ ► button to select **Cleaning** and then press the **OK** button.

   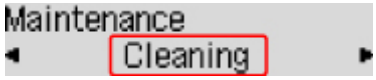

   The printer starts cleaning the print head.

   Do not perform any other operations until the printer completes the cleaning of the print head. This takes about 1 minute.

4. Check the print head condition.

   To check the print head condition, print the nozzle check pattern.

Note

- If the problem is not resolved after cleaning the print head twice, clean the print head deeply.

Deep Print Head Cleaning

If print quality does not improve by the standard cleaning of the print head, clean the print head deeply. Cleaning the print head deeply consumes more ink than the standard cleaning of the print head, so clean the print head deeply only when necessary.

1. Make sure that the power is turned on.

2. Press the **Setup** button, use the ◄ ► button to select **Maintenance**, and press the **OK** button.

   LCD and Operation Panel

3. Use the ◄ ► button to select **Deep cleaning** and then press the **OK** button.

   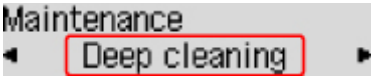

   The printer starts cleaning the print head deeply.

   Do not perform any other operations until the printer completes the deep cleaning of the print head. This takes about 3 minutes.

4. Check the print head condition.

   To check the print head condition, print the nozzle check pattern.

Aligning the Print Head

If printed ruled lines are misaligned or print results are otherwise unsatisfactory, adjust the print head position.

Note

- If the remaining ink level is low, the print head alignment sheet will not be printed correctly.

  If the remaining ink level is low, refill ink tanks.

You need to prepare: a sheet of A4 or Letter-sized plain paper (including recycled paper)*

* Be sure to use paper that is white and clean on both sides.

1. Make sure that the power is turned on.

2. Load a sheet of A4 or Letter-sized plain paper on the rear tray.

   After loading paper on the rear tray, the paper information registration screen appears on the LCD. Select **A4** or **Letter** for **Size:** and **Plain paper** for **Type:** and then press the **OK** button.

   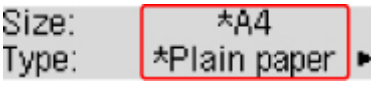

3. Pull out the paper output tray and open the output tray extension.

4. Press the **Setup** button, use the ◄ ► button to select **Maintenance**, and press the **OK** button.

   LCD and Operation Panel

5. Use the ◄ ► button to select **Head alignment** and then press the **OK** button.

   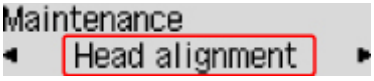

   The print head alignment sheet will be printed.

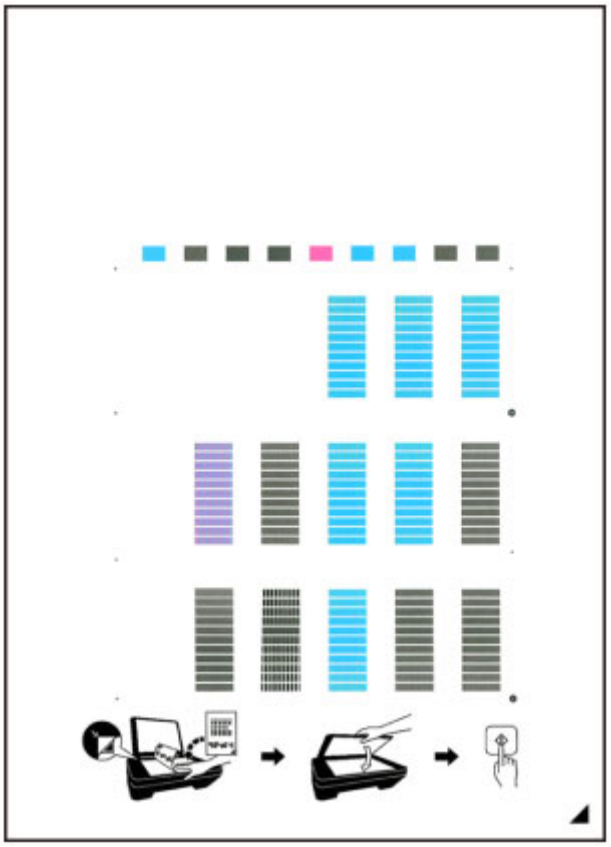

Important

- Do not touch any printed part on the print head alignment sheet. If the sheet is stained or wrinkled, it may not be scanned properly.
- If the print head alignment sheet was not printed correctly, press the **Stop** button, then redo this procedure from the beginning.

6. Load the print head alignment sheet on the platen glass.

Load the print head alignment sheet WITH THE PRINTED SIDE FACING DOWN and align the mark ◢ on the bottom right corner of the sheet with the alignment mark ⇲.

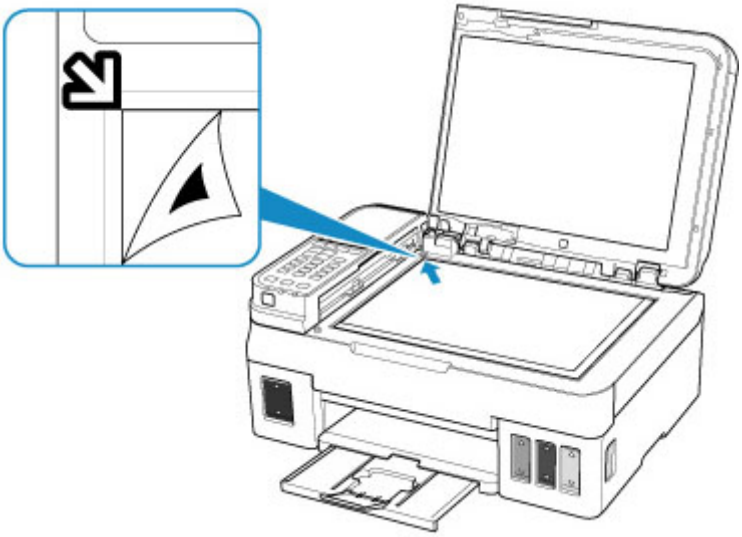

7. Close the document cover gently, then press the **Black** button or the **Color** button.

   The printer starts scanning the print head alignment sheet, and the print head position will be adjusted automatically.

   After the print head position adjustment completion message is displayed, remove the print head alignment sheet on the platen glass.

   Important

   - Do not open the document cover or move the print head alignment sheet on the platen glass until adjusting the print head position is complete.
   - If the error message appears on the LCD, press the **OK** button to release the error, and then take appropriate action.

     An Error Occurs

Note

- If the print results are still not satisfactory after adjusting the print head position as described above, adjust the print head position manually from the computer.
  - For Windows:

    Adjusting Print Head Position
  - For macOS:

    Adjusting Print Head Position
- To print and check the current head position adjustment values, select **Print align value** from the **Maintenance** screen.

Cleaning

- Cleaning Exterior Surfaces
- Cleaning the Platen Glass and Document Cover
- Cleaning the ADF (Auto Document Feeder)
- Cleaning Paper Feed Rollers
- Cleaning Inside the Printer (Bottom Plate Cleaning)

Cleaning Paper Feed Rollers

If the paper feed rollers are dirty or paper powder is attached to it, paper may not be fed properly.

In this case, clean the paper feed rollers.

You need to prepare: three sheets of A4 or Letter-sized plain paper

1. Make sure that the power is turned on.

2. Remove any paper from the rear tray.

3. Press the **Setup** button, use the ◄ ► button to select **Maintenance**, and press the **OK** button.

   LCD and Operation Panel

4. Clean the paper feed rollers without paper.

   1. Use the ◄ ► button to select **Roller cleaning** and then press the **OK** button.

      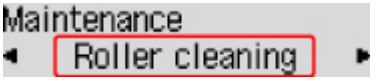

      The paper feed rollers will rotate as it is cleaned.

5. Clean the paper feed rollers with paper.

   1. Make sure that the paper feed rollers have stopped rotating, load three sheets of A4 or Letter-sized plain paper on the rear tray.

      After loading paper on the rear tray, the paper information registration screen appears on the LCD. Select **A4** or **Letter** for **Size:** and **Plain paper** for **Type:** and then press the **OK** button.

      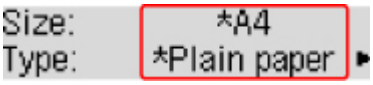

   2. Pull out the paper output tray and open the output tray extension.

   3. Make sure that **Roller cleaning** is selected and press the **OK** button.

      The printer starts cleaning. The cleaning will be complete when the paper is ejected.

If the problem is not resolved after cleaning the paper feed rollers, contact the service center.

Cleaning Inside the Printer (Bottom Plate Cleaning)

Remove stains caused by ink from the inside of the printer. To prevent a printed paper from staining with ink, we recommend performing cleaning regularly.

You need to prepare: a sheet of A4 or Letter-sized plain paper*

* Be sure to use a new piece of paper.

1. Make sure that the power is turned on.

2. Prepare paper.

   1. Fold a single sheet of A4 or Letter-sized plain paper in half widthwise, then unfold the paper.

   2. Load only this sheet of paper on the rear tray with the open side facing you.

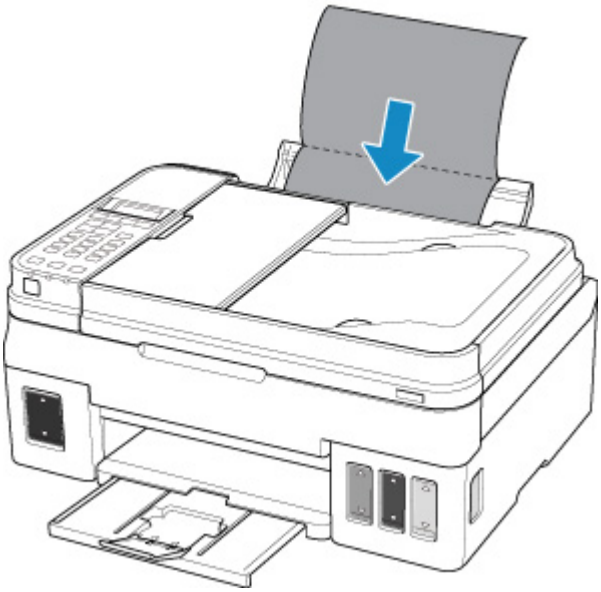

   After loading paper on the rear tray, the paper information registration screen appears on the LCD. Select **A4** or **Letter** for **Size:** and **Plain paper** for **Type:** and then press the **OK** button.

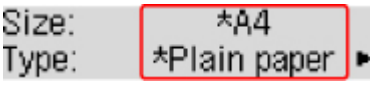

   3. Pull out the paper output tray and open the output tray extension.

3. Press the **Setup** button, use the ◄ ► button to select **Maintenance**, and press the **OK** button.

   LCD and Operation Panel

4. Use the ◄ ► button to select **Bottom cleaning** and then press the **OK** button.

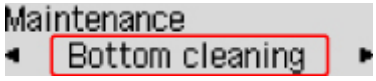

The paper cleans the inside of the printer as it feeds through the printer.

Check the folded parts of the ejected paper. If they are smudged with ink, perform Bottom Plate Cleaning again.

Note

- When performing Bottom Plate Cleaning again, be sure to use a new piece of paper.

If the problem is not resolved after performing cleaning again, the protrusions inside the printer may be stained. Wipe off any ink from the protrusions using a cotton swab or the like.

Important

- Be sure to turn off the power and unplug the power cord before cleaning the printer. This can cause trouble with the printer.

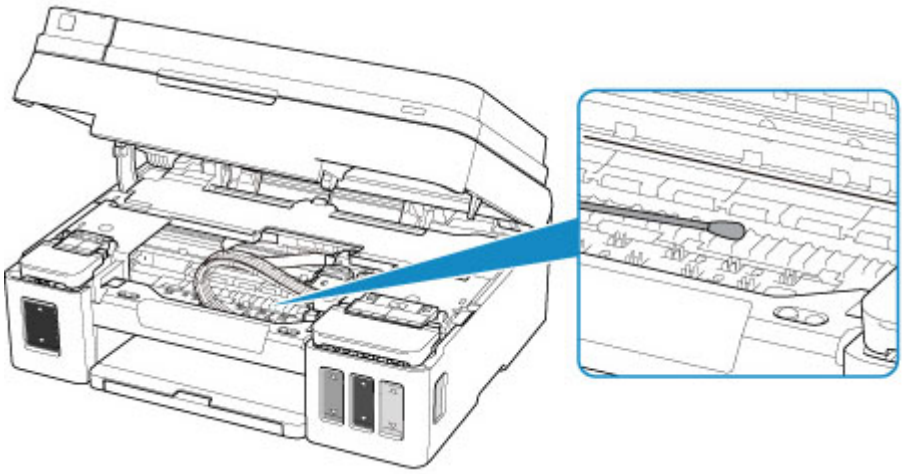

Overview

- **Safety**
  - Safety Precautions
  - Regulatory Information
  - WEEE (EU & EEA)
- **Handling Precautions**
  - Canceling Print Jobs
  - Legal Restrictions on Scanning/Copying
  - Transporting Your Printer
  - When Repairing, Lending, or Disposing of the Printer
  - Keeping Print Quality High
- **Main Components and Their Use**
  - Main Components
  - Power Supply
  - LCD and Operation Panel
  - Entering Numbers, Letters, and Symbols
- **Changing Settings**
  - Changing Printer Settings from Your Computer (Windows)
  - Changing Printer Settings from Your Computer (macOS)
  - Changing Settings from Operation Panel
- **Specifications**

Safety

- Safety Precautions
- Regulatory Information
- WEEE (EU&EEA)

Safety Precautions

Choosing a location

- Do not install the printer in a location that is unstable or subject to excessive vibration.
- Do not install the printer in locations that are very humid or dusty, in direct sunlight, outdoors, or close to a heating source.
  To avoid the risk of fire or electric shocks, use the printer under the operating environment specified in the Specifications.
- Do not place the printer on a thick rug or carpet.
- Do not place the printer with its back attached to the wall.

Power Supply

- Ensure that the area around the power outlet is kept clear at all times so you can easily unplug the power cord if necessary.
- Never remove the plug by pulling on the cord.
  Pulling the cord may damage the power cord, leading to possible fire or electrical shock.
- Do not use an extension lead/cord.

Working Around the Printer

- Never put your hands or fingers in the printer while it is printing.
- When moving the printer, carry the printer at both ends. In case the printer weighs more than 14 kg, it is recommended to have two people lifting the printer. Accidental dropping of the printer may cause injury. For the printer's weight, refer to the Specifications.
- Do not transport or use the printer on a slant, vertically or upside-down, as the ink may leak and damage the printer.
- Do not place any object on the printer. Especially do not place metal objects (paper clips, staples, etc.) or containers of flammable solvents (alcohol, thinners, etc.) on top of the printer.
- When loading a thick book on the platen glass, do not press hard on the Document Cover. The platen glass may break and cause injury.

Cartridges/Ink Bottles

- Keep ink bottles out of the reach of children. In case ink is accidentally licked or swallowed, rinse out mouth or give one or two glasses of water to drink. If irritation or discomfort occurs, obtain medical advice immediately.
- In case ink gets in contact with eyes, rinse with water immediately. In case ink gets in contact with skin, wash with soap and water immediately. If irritation to eyes or skin persists, obtain medical advice immediately.
- Never touch the electrical contacts on cartridges after printing.
  The metal parts may be very hot and could cause burns.
- Do not throw cartridges and ink bottles into fire.
- Do not attempt to disassemble or modify cartridges and ink bottles.

Regulatory Information

IMPORTANT SAFETY INSTRUCTIONS

SAVE THESE INSTRUCTIONS

When using your telephone equipment, basic safety precautions should always be followed to reduce the risk of fire, electric shock and injury to persons, including the following:

1. Do not use this product near water, for example, near a bath tub, wash bowl, kitchen sink or laundry tub, in a wet basement or near a swimming pool.
2. Avoid using this product during an electrical storm. There may be a remote risk of electric shock from lightning.
3. Do not use this product to report a gas leak in the vicinity of the leak.

"CAUTION - To reduce the risk of fire, use only No. 26 AWG or larger telecommunication line cord."

IMPORTANTES MESURES DE SÉCURITÉ

CONSERVER CES INSTRUCTIONS

Certaines mesures de sécurité doivent être prises pendant l'utilisation de matérial téléphonique afin de réduire les risques d'incendie, de choc électrique et de blessures.

En voice quelquesunes :

1. Ne pas utiliser l'appareil près de l'eau, p.ex., près d'une baignoire, d'un lavabo, d'un évier de cuisine, d'un bac à laver, dans un sous-sol humide ou près d'une piscine.
2. Éviter d'utiliser l'appareil pendant un orage électrique. Ceci peut présenter un risque de choc électrique causé par la foudre.
3. Ne pas utiliser l'appareil pour signaler une fuite de gaz s'il est situé près de la fuite.

"ATTENTION - Pour réduire les risques d'incendie, utiliser uniquement des conducteurs de télécommunications 26 AWG au de section supérleure."

Users in the U.S.A.

FCC Notice (U.S.A. Only)
For 120V, 60Hz model
Model Number: K10472 (Contains FCC Approved WLAN Module K30365)

This device complies with Part 15 of the FCC Rules. Operation is subject to the following two conditions: (1) This device may not cause harmful interference, and (2) this device must accept any interference received, including interference that may cause undesired operation.

Note: This equipment has been tested and found to comply with the limits for a Class B digital device, pursuant to Part 15 of the FCC Rules. These limits are designed to provide reasonable protection against harmful interference in a residential installation. This equipment generates, uses and can radiate radio frequency energy and, if not installed and used in accordance with the instructions, may cause harmful interference to radio communications.
However, there is no guarantee that interference will not occur in a particular installation. If this equipment does cause harmful interference to radio or television reception, which can be determined by turning the equipment off and on, the user is encouraged to try to correct the interference by one or more of the following measures:

- Reorient or relocate the receiving antenna.
- Increase the separation between the equipment and receiver.
- Connect the equipment into an outlet on a circuit different from that to which the receiver is connected.
- Consult the dealer or an experienced radio/TV technician for help.

Use of a shielded cable is required to comply with Class B limits in Subpart B of Part 15 of the FCC Rules.

Do not make any changes or modifications to the equipment unless otherwise specified in the manual. If such changes or modifications should be made, you could be required to stop operation of the equipment.

FCC ID:AZDK30365

Changes or modifications not expressly approved by the party responsible for compliance could void the user's authority to operate equipment.

This transmitter must not be co-located or operating in conjunction with any other antenna or transmitter.

The equipment complies with FCC radiation exposure limits for at uncontrolled equipment. This equipment should be installed and operated with minimum distance at least 20cm between the radiator and persons body (excluding extremities: hands, wrists, feet and ankles) and must not be colocated or operated with any other antenna or transmitter.

Canon U.S.A., Inc.
One Canon Park
Melville, New York 11747
1-800-652-2666

About Radio Waves

Do not use this product near medical equipment or electronic equipment. Radio wave interference can affect the operation or performance of the equipment.

Pre-Installation Requirements

Order Information

When ordering service from the telephone company for this equipment, the following may be required.

Universal Service Order Code (USOC): RJ11C

The Facility Interface Code (FIC): 02LS2

Service Order Code (SOC): 9.0F

Connection of the Equipment

This equipment complies with Part 68 of the FCC rules and the requirements adopted by the ACTA.

A label on this equipment contains, among other information, a product identifier in the format US:AAAEQ##TXXXX. If requested, this number must be provided to the telephone company.

The REN is used to determine the number of devices that may be connected to a telephone line.

Excessive RENs on a telephone line may result in the devices not ringing in response to an incoming call. In most but not all areas, the sum of RENs should not exceed five (5.0). To be certain of the number of devices that may be connected to a line, as determined by the total RENs, contact the local telephone

company. The REN for this product is part of the product identifier that has the format US:AAAEQ##TXXXX. The digits represented by ## are the REN without a decimal point (e.g., 03 is a REN of 0.3).

A plug and jack used to connect this equipment to the premises wiring and telephone network must comply with the applicable FCC Part 68 rules and requirements adopted by the ACTA. A compliant telephone cord and modular plug is provided with this product. It is designed to be connected to a compatible modular jack that is also compliant. See installation instructions for details.

Connection to party lines is subjected to state tariffs. Contact the state public utility commission, public service commission or corporation commission for information.

If your home has specially wired alarm equipment connected to the telephone line, ensure the installation of this equipment does not disable your alarm equipment. If you have questions about what will disable alarm equipment, consult your telephone company or a qualified installer.

In Case of Equipment Malfunction

Should any malfunction occur which cannot be corrected by the procedures described in the Online Manual, disconnect the equipment from the telephone line cable, turn off the power and disconnect the power cord. The telephone line cable should not be reconnected or the main power switch turned ON until the problem is completely resolved. Users should contact their local authorized Canon Facsimile Service Dealer for the servicing of equipment.

Information regarding Authorized Service Facility locations can be obtained by calling the Canon Customer Center.

Rights of the Telephone Company

If this equipment causes harm to the telephone network, the telephone company may temporarily disconnect service. The telephone company also retains the right to make changes in facilities and services that may affect the operation of this equipment. When such changes are necessary, the telephone company is required to give adequate prior notice to the user. However, if advance notice is not possible, the telephone company will notify the customer as soon as possible. Also, the customer will be advised of his/her right to file a compliant with the FCC if he/she believes it is necessary.

Warning

The Telephone Consumer Protection Act of 1991 makes it unlawful for any person to use a computer or other electronic device to send any message via a telephone FAX machine unless such message clearly contains in a margin at the top or bottom of each transmitted page, or on the first page of the transmission, the date and time it is sent and an identification of the business or other entity, or other individual sending the message and the telephone number of the sending machine or such business, other entity, or individual.

In order to program this information into your FAX machine, you should complete the procedure to register your name, unit's telephone number, time, and date. Refer to the Online Manual.

Users in Canada

This device complies with Industry Canada license-exempt RSS standard(s). Operation is subject to the following two conditions:

(1) this device may not cause interference, and (2) this device must accept any interference, including interference that may cause undesired operation of the device.

This equipment complies with IC radiation exposure limits set forth for an uncontrolled environment and meets RSS-102 of the IC radio frequency (RF) Exposure rules. This equipment should be installed and operated keeping the radiator at least 20cm or more away from person's body (excluding extremities: hands, wrists, feet and ankles).

Pre-Installation Requirements

Notice

This product meets the applicable Innovation, Science and Economic Development Canada technical specifications.

The Ringer Equivalence Number is an indication of the maximum number of devices allowed to be connected to a telephone interface. The termination on an interface may consist of any combination of devices subject only to the requirement that the sum of the RENs of all the devices does not exceed five.

Pour les usagers résidant au Canada

Le présent appareil est conforme aux CNR d'Industrie Canada applicables aux appareils radio exempts de licence. L'exploitation est autorisée aux deux conditions suivantes :

(1) l'appareil ne doit pas produire de brouillage, et (2) l'utilisateur de l'appareil doit accepter tout brouillage radioélectrique subi, même si le brouillage est susceptible d'en compromettre le fonctionnement.

Cet équipement est conforme aux limites d'exposition aux rayonnements énoncées pour un environnement non contrôlé et respecte les règles d'exposition aux fréquences radioélectriques (RF) CNR-102 de l'IC. Cet équipement doit être installé et utilisé en gardant une distance de 20 cm ou plus entre le dispositif rayonnant et le corps (à l'exception des extrémités : mains, poignets, pieds et chevilles).

Conditions de pré-installation

Avis

Le présent produit est conforme aux spécifications techniques applicables d'Innovation, Sciences et Développement économique Canada.

L'indice d'équivalence de la sonnerie (IES) sert à indiquer le nombre maximal de terminaux qui peuvent être raccordés à une interface téléphonique. La terminaison d'une interface peut consister en une combinaison quelconque de dispositifs, à la seule condition que la somme d'indices d'équivalence de la sonnerie de tous les dispositifs n'excède pas 5.

Users in New Zealand

The grant of a Telepermit for any item of terminal equipment indicates only that Spark has accepted that the item complies with the minimum conditions for connection to its network. It indicates no endorsement of the product by Spark, nor does it provide any sort of warranty. Above all, it provides no assurance that any item will work correctly in all respects with another item of Telepermitted equipment of a different make or model, nor does it imply that any product is compatible with all of Spark's network services.
This equipment is not capable, under all operating conditions, of correct operation at the higher speeds for

which it is designed. Spark will accept no responsibility should difficulties arise in such circumstances. This condition typically applies to 56 kbit/s modems and V34 facsimile machines.
Please note when you connect an extension phone to this device, if you use an extension phone which has features such as "last number redial", redial memory numbers may be lost.
Telepermitted equipment only may be connected to the telephone port. The telephone port is not specifically designed for 3-wire-connected equipment. 3-wire-connected equipment might not respond to incoming ringing when attached to this port.
The automatic calling functions of this equipment must not be used to cause a nuisance to other Spark customers.

Environmental Information

Reducing your environmental impact

Power Consumption and Operational Modes

The amount of electricity a device consumes depends on the way the device is used. This product is designed and set in a way to allow you to reduce the power consumption. After the last print it switches to Ready Mode. In this mode it can print again immediately if required. If the product is not used for a time, the device switches to its Sleep Mode. The devices consume less power (Watt) in these modes.

Energy Star®

The Energy Star® programme is a voluntary scheme to promote the development and purchase of energy efficient models, which help to minimise environmental impact.
Products which meet the stringent requirements of the Energy Star® programme for both environmental benefits and the amount of energy consumption will carry the Energy Star® logo accordingly.

Paper types

This product can be used to print on both recycled and virgin paper (certified to an environmental stewardship scheme), which complies with EN12281 or a similar quality standard. In addition it can support printing on media down to a weight of 64g/m^2, lighter paper means less resources used and a lower environmental footprint for your printing needs.

WEEE (EU&EEA)

Only for European Union and EEA (Norway, Iceland and Liechtenstein)

This symbol indicates that this product is not to be disposed of with your household waste, according to the WEEE Directive (2012/19/EU) and national legislation. This product should be handed over to a designated collection point, e.g., on an authorized one-for-one basis when you buy a new similar product or to an authorized collection site for recycling waste electrical and electronic equipment (EEE). Improper handling of this type of waste could have a possible negative impact on the environment and human health due to potentially hazardous substances that are generally associated with EEE. At the same time, your cooperation in the correct disposal of this product will contribute to the effective usage of natural resources. For more information about where you can drop off your waste equipment for recycling, please contact your local city office, waste authority, approved WEEE scheme or your household waste disposal service. For more information regarding return and recycling of WEEE products, please visit www.canon-europe.com/weee.

Nur für Europäische Union und EWR (Norwegen, Island und Liechtenstein)

Dieses Symbol weist darauf hin, dass dieses Produkt gemäß der EU-Richtlinie über Elektro- und Elektronik-Altgeräte (2012/19/EU) und nationalen Gesetzen nicht über den Hausmüll entsorgt werden darf. Dieses Produkt muss bei einer dafür vorgesehenen Sammelstelle abgegeben werden. Dies kann z. B. durch Rückgabe beim Kauf eines ähnlichen Produkts oder durch Abgabe bei einer autorisierten Sammelstelle für die Wiederaufbereitung von Elektro- und Elektronik-Altgeräten geschehen. Der unsachgemäße Umgang mit Altgeräten kann aufgrund potentiell gefährlicher Stoffe, die generell mit Elektro- und Elektronik-Altgeräten in Verbindung stehen, negative Auswirkungen auf die Umwelt und die menschliche Gesundheit haben. Durch die umweltgerechte Entsorgung dieses Produkts tragen Sie außerdem zu einer effektiven Nutzung natürlicher Ressourcen bei. Informationen zu Sammelstellen für Altgeräte erhalten Sie bei Ihrer Stadtverwaltung, dem öffentlich-rechtlichen Entsorgungsträger, einer autorisierten Stelle für die Entsorgung von Elektro- und Elektronik-Altgeräten oder Ihrem örtlichen Entsorgungsunternehmen. Weitere Informationen zur Rückgabe und Entsorgung von Elektro- und Elektronik-Altgeräten finden Sie unter www.canon-europe.com/weee.

Union Européenne, Norvège, Islande et Liechtenstein uniquement.

Ce symbole indique que ce produit ne doit pas être jeté avec les ordures ménagères, conformément à la directive DEEE (2012/19/UE) et à la réglementation de votre pays. Ce produit doit être confié au distributeur à chaque fois que vous achetez un produit neuf similaire, ou à un point de collecte mis en

place par les collectivités locales pour le recyclage des Déchets des Équipements Électriques et Électroniques (DEEE). Le traitement inapproprié de ce type de déchet risque d'avoir des répercussions sur l'environnement et la santé humaine, du fait de la présence de substances potentiellement dangereuses généralement associées aux équipements électriques et électroniques. Parallèlement, votre entière coopération dans le cadre de la mise au rebut correcte de ce produit favorisera une meilleure utilisation des ressources naturelles. Pour plus d'informations sur les points de collecte des équipements à recycler, contactez vos services municipaux, les autorités locales compétentes, le plan DEEE approuvé ou le service d'enlèvement des ordures ménagères. Pour plus d'informations sur le retour et le recyclage des produits DEEE, consultez le site: www.canon-europe.com/weee.

Uitsluitend bestemd voor de Europese Unie en EER (Noorwegen, IJsland en Liechtenstein)

Dit symbool geeft aan dat dit product in overeenstemming met de AEEA-richtlijn (2012/19/EU) en de nationale wetgeving niet mag worden afgevoerd met het huishoudelijk afval. Dit product moet worden ingeleverd bij een aangewezen, geautoriseerd inzamelpunt, bijvoorbeeld wanneer u een nieuw gelijksoortig product aanschaft, of bij een geautoriseerd inzamelpunt voor hergebruik van elektrische en elektronische apparatuur (EEA). Een onjuiste afvoer van dit type afval kan leiden tot negatieve effecten op het milieu en de volksgezondheid als gevolg van potentieel gevaarlijke stoffen die veel voorkomen in elektrische en elektronische apparatuur (EEA). Bovendien werkt u door een juiste afvoer van dit product mee aan het effectieve gebruik van natuurlijke hulpbronnen. Voor meer informatie over waar u uw afgedankte apparatuur kunt inleveren voor recycling kunt u contact opnemen met het gemeentehuis in uw woonplaats, de reinigingsdienst, of het afvalverwerkingsbedrijf. U kunt ook het schema voor de afvoer van afgedankte elektrische en elektronische apparatuur (AEEA) raadplegen. Ga voor meer informatie over het inzamelen en recyclen van afgedankte elektrische en elektronische apparatuur naar www.canon-europe.com/weee.

Sólo para la Unión Europea y el Área Económica Europea (Noruega, Islandia y Liechtenstein)

Este símbolo indica que este producto no debe desecharse con los desperdicios domésticos, de acuerdo con la directiva RAEE (2012/19/UE) y con la legislación nacional. Este producto debe entregarse en uno de los puntos de recogida designados, como por ejemplo, entregándolo en el lugar de venta al comprar un producto similar o depositándolo en un lugar de recogida autorizado para el reciclado de residuos de aparatos eléctricos y electrónicos (RAEE). La manipulación inapropiada de este tipo de desechos podría tener un impacto negativo en el entorno y la salud humana, debido a las sustancias potencialmente peligrosas que normalmente están asociadas con los RAEE. Al mismo tiempo, su cooperación a la hora de desechar correctamente este producto contribuirá a la utilización eficazde los recursos naturales. Para más información sobre cómo puede eliminar el equipo para su reciclado, póngase en contacto con las autoridades locales, con las autoridades encargadas de los desechos, con un sistema de gestión RAEE

autorizado o con el servicio de recogida de basuras doméstico. Si desea más información acerca de la devolución y reciclado de RAEE, visite la web www.canon-europe.com/weee.

Només per a la Unió Europea i a l'Espai Econòmic Europeu (Noruega, Islàndia i Liechtenstein)

Aquest símbol indica que aquest producte no s'ha de llençar a les escombraries de la llar, d'acord amb la Directiva RAEE (2012/19/UE) i la legislació nacional. Aquest producte s'hauria de lliurar en un dels punts de recollida designats, com per exemple, intercanviant-lo un per un en comprar un producte similar o lliurant-lo en un lloc de recollida autoritzat per al reciclatge de residus d'aparells elèctrics i electrònics (AEE). La manipulació inadequada d'aquest tipus de residus podria tenir un impacte negatiu en l'entorn i en la salut humana, a causa de les substàncies potencialment perilloses que normalment estan associades als AEE. Així mateix, la vostra cooperació a l'hora de llençar correctament aquest producte contribuirà a la utilització efectiva dels recursos naturals. Per a més informació sobre els punts on podeu lliurar aquest producte per procedir al seu reciclatge, adreceu-vos a la vostra oficina municipal, a les autoritats encarregades dels residus, al pla de residus homologat per la RAEE o al servei de recollida de deixalles domèstiques de la vostra localitat. Per a més informació sobre la devolució i el reciclatge de productes RAEE, visiteu www.canon-europe.com/weee.

Solo per Unione Europea e SEE (Norvegia, Islanda e Liechtenstein)

Questo simbolo indica che il prodotto deve essere oggetto di raccolta separata in conformità alla Direttiva RAEE (2012/19/UE) e alla normativa locale vigente. Il prodotto deve essere smaltito presso un centro di raccolta differenziata, un distributore autorizzato che applichi il principio dell'"uno contro uno", ovvero del ritiro della vecchia apparecchiatura elettrica al momento dell'acquisto di una nuova, o un impianto autorizzato al riciclaggio dei rifiuti di apparecchiature elettriche ed elettroniche. La gestione impropria di questo tipo di rifiuti può avere un impatto negativo sull'ambiente e sulla salute umana causato dalle sostanze potenzialmente pericolose che potrebbero essere contenute nelle apparecchiature elettriche ed elettroniche. Un corretto smaltimento di tali prodotti contribuirà inoltre a un uso efficace delle risorse naturali ed eviterà di incorrere nelle sanzioni amministrative di cui all'art. 255 e successivi del Decreto Legislativo n. 152/06. Per ulteriori informazioni sullo smaltimento e il recupero dei Rifiuti di Apparecchiature Elettriche ed Elettroniche, consultare la Direttiva RAEE, rivolgersi alle autorità competenti, oppure visitare il sito www.canon-europe.com/weee.

Apenas para a União Europeia e AEE (Noruega, Islândia e Liechtenstein)

Este símbolo indica que o produto não deve ser colocado no lixo doméstico, de acordo com a Directiva REEE (2012/19/UE) e a legislação nacional. Este produto deverá ser colocado num ponto de recolha designado, por exemplo, num local próprio autorizado quando adquirir um produto semelhante novo ou num local de recolha autorizado para reciclar resíduos de equipamentos eléctricos e electrónicos (EEE). O tratamento inadequado deste tipo de resíduo poderá causar um impacto negativo no ambiente e na saúde humana devido às substâncias potencialmente perigosas normalmente associadas aos equipamentos eléctricos e electrónicos. Simultaneamente, a sua cooperação no tratamento correcto deste produto contribuirá para a utilização eficaz dos recursos naturais. Para mais informações sobre os locais onde o equipamento poderá ser reciclado, contacte os serviços locais, a autoridade responsável pelos resíduos, o esquema REEE aprovado ou o serviço de tratamento de lixo doméstico. Para mais informações sobre a devolução e reciclagem de produtos REEE, vá a www.canon-europe.com/weee.

Gælder kun i Europæiske Union og EØS (Norge, Island og Liechtenstein)

Dette symbol angiver, at det pågældende produkt ikke må bortskaffes sammen med dagrenovation jf. direktivet om affald af elektrisk og elektronisk udstyr (WEEE) (2012/19/EU) og gældende national lovgivning. Det pågældende produkt skal afleveres på et nærmere specificeret indsamlingssted, f.eks. i overensstemmelse med en godkendt én-til-én-procedure, når du indkøber et nyt tilsvarende produkt, eller produktet skal afleveres på et godkendt indsamlingssted for elektronikaffald. Forkert håndtering af denne type affald kan medføre negative konsekvenser for miljøet og menneskers helbred på grund af de potentielt sundhedsskadelige stoffer, der generelt kan forefindes i elektrisk og elektronisk udstyr. Når du foretager korrekt bortskaffelse af det pågældende produkt, bidrager du til effektiv brug af naturressourcerne. Yderligere oplysninger om, hvor du kan bortskaffe dit elektronikaffald med henblik på genanvendelse, får du hos de kommunale renovationsmyndigheder. Yderligere oplysninger om returnering og genanvendelse af affald af elektrisk og elektronisk udstyr får du ved at besøge www.canon-europe.com/weee.

Μόνο για την Ευρωπαϊκή Ένωση και τον ΕΟΧ (Νορβηγία, Ισλανδία και Λιχτενστάιν)

Αυτό το σύμβολο υποδηλώνει ότι αυτό το προϊόν δεν πρέπει να απορρίπτεται μαζί με τα οικιακά απορρίμματα, σύμφωνα με την Οδηγία σχετικά με τα Απόβλητα Ηλεκτρικού και Ηλεκτρονικού Εξοπλισμού (ΑΗΗΕ) (2012/19/ΕΕ) και την εθνική σας νομοθεσία. Αυτό το προϊόν πρέπει να παραδίδεται σε καθορισμένο σημείο συλλογής, π.χ. σε μια εξουσιοδοτημένη βάση ανταλλαγής όταν αγοράζετε ένα νέο παρόμοιο προϊόν ή σε μια εξουσιοδοτημένη θέση συλλογής για την ανακύκλωση των αποβλήτων Ηλεκτρικού και Ηλεκτρονικού Εξοπλισμού (ΗΗΕ). Ο ακατάλληλος χειρισμός αυτού του τύπου αποβλήτων μπορεί να έχει αρνητικό αντίκτυπο στο περιβάλλον και την υγεία του ανθρώπου, λόγω δυνητικώς επικίνδυνων ουσιών που γενικά συνδέονται με τον ΗΗΕ. Ταυτόχρονα, η συνεργασία σας όσον αφορά τη σωστή απόρριψη αυτού του προϊόντος θα συμβάλει στην αποτελεσματική χρήση των φυσικών πόρων. Για περισσότερες πληροφορίες σχετικά με τα σημεία όπου μπορείτε να απορρίψετε τον εξοπλισμό σας για

ανακύκλωση, επικοινωνήστε με το τοπικό γραφείο της πόλης σας, την υπηρεσία απορριμμάτων, το εγκεκριμένο σχήμα ΑΗΗΕ ή την υπηρεσία απόρριψης οικιακών αποβλήτων. Για περισσότερες πληροφορίες σχετικά με την επιστροφή και την ανακύκλωση των προϊόντων ΑΗΗΕ, επισκεφθείτε την τοποθεσία www.canon-europe.com/weee.

Gjelder kun den europeiske union og EØS (Norge, Island og Liechtenstein)

Dette symbolet indikerer at dette produktet ikke skal kastes sammen med husholdningsavfall, i henhold til WEEE-direktiv (2012/19/EU) og nasjonal lov. Produktet må leveres til et dertil egnet innsamlingspunkt, det vil si på en autorisert en-til-en-basis når du kjøper et nytt lignende produkt, eller til et autorisert innsamlingssted for resirkulering av avfall fra elektrisk og elektronisk utstyr (EE-utstyr). Feil håndtering av denne typen avfall kan være miljø- og helseskadelig på grunn av potensielt skadelige stoffer som ofte brukes i EE-utstyr. Samtidig bidrar din innsats for korrekt avhending av produktet til effektiv bruk av naturressurser. Du kan få mer informasjon om hvor du kan avhende utrangert utstyr til resirkulering ved å kontakte lokale myndigheter, et godkjent WEEE-program eller husholdningens renovasjonsselskap. Du finner mer informasjon om retur og resirkulering av WEEE-produkter på www.canon-europe.com/weee.

Vain Euroopan unionin sekä ETA:n (Norja, Islanti ja Liechtenstein) alueelle.

Tämä tunnus osoittaa, että sähkö- ja elektroniikkalaiteromua koskeva direktiivi (SER-direktiivi, 2012/19/EU) sekä kansallinen lainsäädäntö kieltävät tuotteen hävittämisen talousjätteen mukana. Tuote on vietävä asianmukaiseen keräyspisteeseen, esimerkiksi kodinkoneliikkeeseen uutta vastaavaa tuotetta ostettaessa tai viralliseen sähkö- ja elektroniikkalaiteromun keräyspisteeseen. Sähkö- ja elektroniikkalaiteromun virheellinen käsittely voi vahingoittaa ympäristöä ja ihmisten terveyttä, koska laitteet saattavat sisältää ympäristölle ja terveydelle haitallisia aineita. Lisäksi tuotteen asianmukainen hävittäminen säästää luonnonvaroja. Lisätietoja sähkö- ja elektroniikkalaiteromun keräyspisteistä saat kaupunkien ja kuntien tiedotuksesta, jätehuoltoviranomaisilta, sähkö- ja elektroniikkalaiteromun kierrätysjärjestelmän ylläpitäjältä ja jätehuoltoyhtiöltä. Lisätietoja sähkö- ja elektroniikkalaiteromun keräyksestä ja kierrätyksestä on osoitteessa www.canon-europe.com/weee.

Endast för Europeiska unionen och EES (Norge, Island och Liechtenstein)

Den här symbolen visar att produkten enligt WEEE-direktivet (2012/19/EU) och nationell lagstiftning inte får sorteras och slängas som hushållsavfall. Den här produkten ska lämnas in på en därför avsedd insamlingsplats, t.ex. på en återvinningsstation auktoriserad att hantera elektrisk och elektronisk utrustning (EE-utrustning) eller hos handlare som är auktoriserade att byta in varor då nya, motsvarande

köps (en mot en). Olämplig hantering av avfall av den här typen kan ha en negativ inverkan på miljön och människors hälsa på grund av de potentiellt farliga ämnen som kan återfinnas i elektrisk och elektronisk utrustning. Din medverkan till en korrekt avfallshantering av den här produkten bidrar dessutom till en effektiv användning av naturresurserna. Kontakta ditt lokala kommunkontor, berörd myndighet, företag för avfallshantering eller ta del av en godkänd WEEE-organisation om du vill ha mer information om var du kan lämna den kasserade produkten för återvinning. För mer information om inlämning och återvinning av WEEE-produkter, se www.canon-europe.com/weee.

Pouze Evropská unie a EHP (Norsko, Island a Lichtenštejnsko)

Tento symbol znamená, že podle směrnice o OEEZ (2012/19/EU) a podle vnitrostátních právních předpisů nemá být tento výrobek likvidován s odpadem z domácností. Tento výrobek má být vrácen do sběrného místa, např. v rámci autorizovaného systému odběru jednoho výrobku za jeden nově prodaný podobný výrobek nebo v autorizovaném sběrném místě pro recyklaci odpadních elektrických a elektronických zařízení (OEEZ). Nevhodné nakládání s tímto druhem odpadu by mohlo mít negativní dopad na životní prostředí a lidské zdraví, protože elektrická a elektronická zařízení zpravidla obsahují potenciálně nebezpečné látky. Vaše spolupráce na správné likvidaci tohoto výrobku současně napomůže efektivnímu využívání přírodních zdrojů. Další informace o místech sběru vašeho odpadního zařízení k recyklaci vám sdělí místní úřad vaší obce, správní orgán vykonávající dozor nad likvidací odpadu, sběrny OEEZ nebo služba pro odvoz komunálního odpadu. Další informace týkající se vracení a recyklace OEEZ naleznete na adrese www.canon-europe.com/weee.

Csak az Európai Unió és az EGT (Norvégia, Izland és Liechtenstein) országaiban

Ez a szimbólum azt jelzi, hogy a helyi törvények és a WEEE-irányelv (2012/19/EU) szerint a termék nem kezelhető háztartási hulladékként. A terméket a kijelölt nyilvános gyűjtőpontokon kell leadni, például hasonló cserekészülék vásárlásakor, illetve bármelyik, elektromos és elektronikai berendezésekből származó hulladék (WEEE) átvételére feljogosított gyűjtőponton. Az ilyen jellegű hulladékok a nem megfelelő kezelés esetén a bennük található veszélyes anyagok révén ártalmasak lehetnek a környezetre és az emberek egészségére. Továbbá, a termékből származó hulladék megfelelő kezelésével hozzájárulhat a természetes nyersanyagok hatékonyabb hasznosításához. A berendezésekből származó, újrahasznosítható hulladékok elhelyezésére vonatkozó további tudnivalókért forduljon a helyi önkormányzathoz, a közterület-fenntartó vállalathoz, a háztartási hulladék begyűjtését végző vállalathoz, illetve a hivatalos WEEE-képviselethez. További tudnivalókat a WEEE-termékek visszajuttatásáról és újrahasznosításáról a www.canon-europe.com/weee.

Tylko dla krajów Unii Europejskiej oraz EOG (Norwegia, Islandia i Liechtenstein)

Ten symbol oznacza, że zgodnie z dyrektywą WEEE dotyczącą zużytego sprzętu elektrycznego i elektronicznego (2012/19/UE) oraz przepisami lokalnymi nie należy wyrzucać tego produktu razem z odpadami gospodarstwa domowego. Produkt należy przekazać do wyznaczonego punktu gromadzenia odpadów, np. firmie, od której kupowany jest nowy, podobny produkt lub do autoryzowanego punktu gromadzenia zużytego sprzętu elektrycznego i elektronicznego w celu poddania go recyklingowi. Usuwanie tego typu odpadów w nieodpowiedni sposób może mieć negatywny wpływ na otoczenie i zdrowie innych osób ze względu na niebezpieczne substancje stosowane w takim sprzęcie. Jednocześnie pozbycie się zużytego sprzętu w zalecany sposób przyczynia się do właściwego wykorzystania zasobów naturalnych. Aby uzyskać więcej informacji na temat punktów, do których można dostarczyć sprzęt do recyklingu, prosimy skontaktować się z lokalnym urzędem miasta, zakładem utylizacji odpadów, skorzystać z instrukcji zatwierdzonej dyrektywą WEEE lub skontaktować się z przedsiębiorstwem zajmującym się wywozem odpadów domowych. Więcej informacji o zwracaniu i recyklingu zużytego sprzętu elektrycznego i elektronicznego znajduje się w witrynie www.canon-europe.com/weee.

Platí len pre štáty Európskej únie a EHP (Nórsko, Island a Lichtenštajnsko)

Tento symbol znamená, že podľa Smernice 2012/19/EÚ o odpade z elektrických a elektronických zariadení (OEEZ) a podľa platnej legislatívy Slovenskej republiky sa tento produkt nesmie likvidovať spolu s komunálnym odpadom. Produkt je potrebné odovzdať do určenej zberne, napr. prostredníctvom výmeny za kúpu nového podobného produktu, alebo na autorizované zberné miesto, ktoré spracúva odpad z elektrických a elektronických zariadení (EEZ). Nesprávna manipulácia s takýmto typom odpadu môže mať negatívny vplyv na životné prostredie a ľudské zdravie, pretože elektrické a elektronické zariadenia obsahujú potenciálne nebezpečné látky. Spoluprácou na správnej likvidácii produktu prispejete k účinnému využívaniu prírodných zdrojov. Ďalšie informácie o mieste recyklácie opotrebovaných zariadení získate od miestneho úradu, úradu životného prostredia, zo schváleného plánu OEEZ alebo od spoločnosti, ktorá zaisťuje likvidáciu komunálneho odpadu. Viac informácií nájdete aj na webovej stránke: www.canon-europe.com/weee.

Üksnes Euroopa Liit ja EMP (Norra, Island ja Liechtenstein)

See sümbol näitab, et antud toodet ei tohi vastavalt elektri- ja elektroonikaseadmete jäätmeid käsitlevale direktiivile (2012/19/EL) ning teie riigis kehtivatele õigusaktidele utiliseerida koos olmejäätmetega. Antud toode tuleb anda selleks määratud kogumispunkti, nt müügipunkt, mis on volitatud üks ühe vastu vahetama, kui ostate uue sarnase toote, või elektri- ja elektroonikaseadmete jäätmete ümbertöötlemiseks

mõeldud kogumispunkti. Täiendava teabe saamiseks elektri- ja elektroonikaseadmetest tekkinud jäätmete tagastamise ja ümbertöötlemise kohta võtke ühendust kohaliku omavalitsusega, asjakohase valitsusasutusega, asjakohase tootjavastutusorganisatsiooniga või olmejäätmete käitlejaga. Lisateavet leitate ka Interneti-leheküljelt www.canon-europe.com/weee.

Tikai Eiropas Savienībai un EEZ (Norvēģijai, Islandei un Lihtenšteinai)

Šis simbols norāda, ka atbilstoši ES Direktīvai (2012/19/ES) par elektrisko un elektronisko iekārtu atkritumiem (EEIA) un vietējiem tiesību aktiem no šī izstrādājuma nedrīkst atbrīvoties, izmetot to kopā ar sadzīves atkritumiem. Šis izstrādājums ir jānodod piemērotā savākšanas vietā, piemēram, apstiprinātā veikalā, kur iegādājaties līdzīgu jaunu produktu un atstājat veco, vai apstiprinātā vietā izlietotu elektrisko un elektronisko iekārtu pārstrādei. Nepareiza šāda veida atkritumu apsaimniekošana var apdraudēt vidi un cilvēka veselību tādu iespējami bīstamu vielu dēļ, kas parasti ir elektriskajās un elektroniskajās iekārtās. Turklāt jūsu atbalsts pareizā šāda veida atkritumu apsaimniekošanā sekmēs efektīvu dabas resursu izmantošanu. Lai saņemtu pilnīgāku informāciju par vietām, kur izlietoto iekārtu var nodot pārstrādei, sazinieties ar vietējo pašvaldību, atkritumu savākšanas atbildīgo dienestu, pilnvarotu EEIA struktūru vai sadzīves atkritumu apsaimniekošanas iestādi. Lai saņemtu plašāku informāciju par elektrisko un elektronisko iekārtu nodošanu pārstrādei, apmeklējiet tīmekļa vietni www.canon-europe.com/weee.

Tik Europos Sąjungai ir EEE (Norvegijai, Islandijai ir Lichtenšteinui)

Šis ženklas reiškia, kad gaminio negalima išmesti su buitinėmis atliekomis, kaip yra nustatyta Direktyvoje (2012/19/ES) ir nacionaliniuose teisė aktuose dėl EĮ atliekų tvarkymo. Šį gaminį reikia atiduoti į tam skirtą surinkimo punktą, pvz., pagal patvirtintą keitimo sistemą, kai perkamas panašus gaminys, arba į elektros ir elektroninės įrangos (EĮ) atliekų perdirbimo punktą. Netinkamas tokios rūšies atliekų tvarkymas dėl elektros ir elektroninėje įrangoje esančių pavojingų medžiagų gali pakenkti aplinkai ir žmonių sveikatai. Padėdami užtikrinti tinkamą šio gaminio šalinimo tvarką, kartu prisidėsite prie veiksmingo gamtos išteklių naudojimo. Jei reikia daugiau informacijos, kaip šalinti tokias atliekas, kad jos būtų toliau perdirbamos, kreipkitės į savo miesto valdžios institucijas, atliekų tvarkymo organizacijas, patvirtintų EĮ atliekų sistemų arba jūsų buitinių atliekų tvarkymo įstaigų atstovus. Išsamesnės informacijos apie EĮ atliekų grąžinimo ir perdirbimo tvarką galite rasti apsilankę tinklalapyje www.canon-europe.com/weee.

Samo za Evropsko unijo in EGP (Norveška, Islandija in Lihtenštajn)

Ta simbol pomeni, da tega izdelka v skladu z direktivo OEEO (2012/19/EU) in državno zakonodajo ne smete odvreči v gospodinjske odpadke. Ta izdelek morate odložiti na ustrezno zbiralno mesto, na primer pri pooblaščenem prodajalcu, ko kupite podoben nov izdelek ali na zbiralno mesto za recikliranje električne in elektronske opreme. Neprimerno ravnanje s takšnimi odpadki lahko negativno vpliva na okolje in človekovo zdravje zaradi nevarnih snovi, ki so povezane z električno in elektronsko opremo. S pravilno odstranitvijo izdelka hkrati prispevate tudi k učinkoviti porabi naravnih virov. Če želite več informacij o tem, kje lahko odložite odpadno opremo za recikliranje, pokličite občinski urad, komunalno podjetje ali službo, ki skrbi za odstranjevanje odpadkov, ali si oglejte načrt OEEO. Če želite več informacij o vračanju in recikliranju izdelkov v skladu z direktivo OEEO, obiščite www.canon-europe.com/weee.

Само за Европейския съюз и ЕИП (Норвегия, Исландия и Лихтенщайн)

Този символ показва, че този продукт не трябва да се изхвърля заедно с битовите отпадъци, съгласно Директивата за ИУЕЕО (2012/19/ЕС) и Вашето национално законодателство. Този продукт трябва да бъде предаден в предназначен за целта пункт за събиране, например на база размяна, когато купувате нов подобен продукт, или в одобрен събирателен пункт за рециклиране на излязло от употреба електрическо и електронно оборудване (ИУЕЕО). Неправилното третиране на този тип отпадъци може да доведе до евентуални отрицателни последствия за околната среда и човешкото здраве поради потенциално опасните вещества, които обикновено са свързани с ЕЕО. В същото време Вашето съдействие за правилното изхвърляне на този продукт ще допринесе за ефективното използване на природните ресурси. Повече информация относно местата, където може да предавате излязло от употреба оборудване за рециклиране, може да получите от местните власти, от органа, отговорен за отпадъците и от одобрена система за излязло от употреба ЕЕО или от Вашата местна служба за битови отпадъци. За повече информация относно връщането и рециклирането на продукти от излязло от употреба ЕЕО посетете www.canon-europe.com/weee.

Doar pentru Uniunea Europeană şi EEA (Norvegia, Islanda şi Liechtenstein)

Acest simbol indică faptul că acest produs nu trebuie aruncat o dată cu reziduurile menajere, în conformitate cu Directiva DEEE (Directiva privind deşeurile de echipamente electrice şi electronice) (2012/19/UE) şi legile naţionale. Acest produs trebuie transportat la un punct de colectare special, de exemplu un centru care preia produsele vechi atunci când achiziţionaţi un produs nou similar, sau la un punct de colectare autorizat pentru reciclarea deşeurilor provenite de la echipamentele electrice şi electronice (EEE). Mânuirea necorespunzătoare a acestor tipuri de deşeuri poate avea un impact negativ asupra mediului înconjurător şi sănătăţii indivizilor, din cauza substanţelor potenţial nocive care sunt în general asociate cu EEE. În acelaşi timp, cooperarea dvs. la reciclarea corectă a acestui produs va contribui la utilizarea efectivă a resurselor naturale. Pentru mai multe informaţii privind locurile de reciclare a deşeurilor provenite de la echipamente, contactaţi biroul primăriei locale, autoritatea responsabilă cu colectarea deşeurilor, schema DEEE aprobată sau serviciul de colectare a deşeurilor menajere. Pentru

mai multe informaţii privind returnarea şi reciclarea produselor DEEE, vizitaţi www.canon-europe.com/weee.

Samo za Europsku uniju i EEZ (Norveška, Island i Lihtenštajn)

Ovaj simbol pokazuje da se ovaj proizvod ne smije odlagati s kućnim otpadom sukladno WEEE Direktivi (2012/19/EC) i vašem nacionalnom zakonu. Ovaj proizvod je potrebno predati na posebno mjesto za sakupljanje otpada, npr. na ovlašteno mjesto gdje možete zamijeniti staro za novo ukoliko kupujete novi sličan proizvod ili na ovlašteno mjesto za sakupljanje rabljene električne i elektroničke opreme (EEE) za recikliranje. Nepropisno rukovanje ovom vrstom otpada može imati negativan učinak na okolinu i zdravlje ljudi zbog supstanci koje su potencijalno opasne za zdravlje, a općenito se povezuju s EEE. Istovremeno, vaša će suradnja kroz propisno odlaganje ovog proizvoda doprinijeti efektivnoj uporabi prirodnih resursa. Za više informacija o tome gdje možete odložiti svoj otpad za recikliranje obratite se vašem lokalnom gradskom uredu, komunalnoj službi, odobrenom WEEE programu ili službi za odlaganje kućnog otpada. Ostale informacije o vraćanju i recikliranju WEEE proizvoda potražite na www.canon-europe.com/weee.

Korisnici u Srbiji

Ovaj simbol označava da ovaj proizvod ne sme da se odlaže sa ostalim kućnim otpadom, u skladu sa WEEE Direktivom (2012/19/EU) i nacionalnim zakonima. Ovaj proizvod treba predati određenom centru za prikupljanje, npr. na osnovi "jedan-za-jedan" kada kupujete sličan novi proizvod, ili ovlašćenom centru za prikupljanje za reciklažu istrošene električne i elektronske opreme (EEE). Nepravilno rukovanje ovom vrstom otpada može da ima moguće negativne posledice po životnu sredinu i ljudsko zdravlje usled potencijalno opasnih materijala koji se uglavnom vezuju za EEE. U isto vreme, vaša saradnja na ispravnom odlaganju ovog proizvoda će doprineti efikasnom korišćenju prirodnih resursa. Za više informacija o tome gde možete da predate vašu staru opremu radi recikliranje, vas molimo, da kontaktirate lokalne gradske vlasti, komunalne službe, odobreni plan reciklaže ili Gradsku čistoću. Za više informacija o vraćanju i recikliranju WEEE proizvoda, posetite stranicu www.canon-europe.com/weee.

Handling Precautions

- Canceling Print Jobs
- Legal Restrictions on Scanning/Copying
- Transporting Your Printer
- When Repairing, Lending, or Disposing of the Printer
- Keeping Print Quality High

Legal Restrictions on Scanning/Copying

Scanning, printing, copying, or modifying copies of the following may be punishable under law.

This list is non-exhaustive. When in doubt, check with a local legal representative.

- Paper money
- Money orders
- Certificates of deposit
- Postage stamps (canceled or uncanceled)
- Identification badges or insignia
- Selective service or draft papers
- Checks or drafts issued by governmental agencies
- Motor vehicle licenses and certificates of title
- Traveler's checks
- Food stamps
- Passports
- Immigration papers
- Internal revenue stamps (canceled or uncanceled)
- Bonds or other certificates of indebtedness
- Stock certificates
- Copyrighted works or works of art, without the owner's consent

Transporting Your Printer

When relocating the printer for changing your living place or repairing it, make sure of the following.

Important

- You cannot take ink out of ink tanks.
- Check if the tank cap is completely inserted. If the ink tank cover is not completely closed, insert the tank cap properly.
- With the cartridge left installed in the printer, press the **ON** button to turn off the power. This allows the printer to automatically cap the print head, thus preventing it from drying.
- Do not remove the cartridge. Ink may leak.
- When transporting the printer, pack the printer in a plastic bag so that ink does not leak.
- Pack the printer in a sturdy box so that it is placed with its bottom facing down, using sufficient protective material to ensure safe transport.
- Do not tilt the printer. Ink may leak.
- When a shipping agent is handling transport of the printer, have its box marked "THIS SIDE UP" to keep the printer with its bottom facing down. Mark also with "FRAGILE" or "HANDLE WITH CARE".

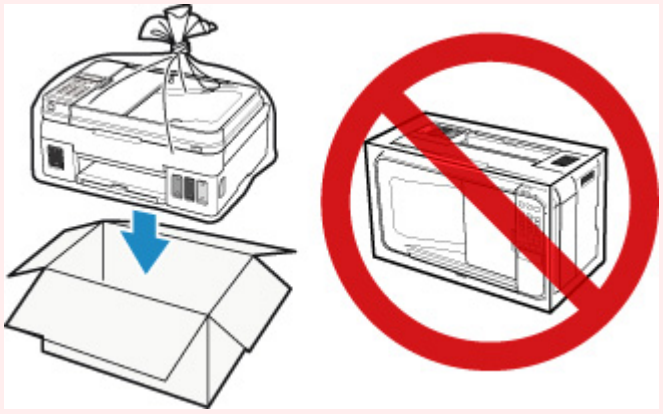

- Please handle with care and ensure the box remains flat and NOT turned upside down or on its side, as the printer may be damaged and ink in the printer may leak.

1. Make sure that the power is turned on.

2. Press the **Setup** button, use the ◄ ► button to select **Maintenance**, and press the **OK** button.

   LCD and Operation Panel

3. Use the ◄ ► button to select **Lock transport pump** and then press the **OK** button.

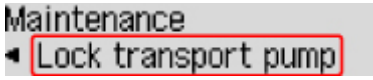

4. Use the ◄ ► button to select **Yes** and then press the **OK** button.

5. Confirm that the **ON** lamp is off and unplug the power cord.

Important

- Do not unplug the printer while the **ON** lamp is lit or flashing, as it may cause malfunction or damage to the printer, making the printer unable to print.
- If the power cord is unplugged, the date/time settings will be reset and all documents stored in the printer's memory will be lost. Send or print a necessary document before unplugging the power cord.

6. Retract the paper output tray and the output tray extension, then close the paper support and the document tray.

7. Unplug the printer cable from the computer and from the printer, then unplug the power cord from the printer.

8. Use adhesive tape to secure all the covers on the printer to keep them from opening during transportation. Then pack the printer in the plastic bag.

9. Attach the protective material to the printer when packing the printer in the box.

When Repairing, Lending, or Disposing of the Printer

If you have entered personal data, passwords and/or other security settings on the printer, such information may be stored in the printer.

When sending the printer for repair, lending or transferring the printer to another person, or disposing of the printer, please be sure to follow the steps below in order to delete such information and prevent third parties from accessing it.

- Reset setting (All data)

Keeping Print Quality High

The key to printing with the optimal printing quality is to prevent the print head from drying or clogging. Always observe the following rules for optimal printing quality.

Note

- Depending on the type of paper, ink may blur if you trace the printed area with a highlight pen or paint-stick, or bleed if water or sweat comes in contact with the printed area.

Never unplug the power cord until the power is turned off!

If you press the **ON** button to turn off the power, the printer caps the print head (nozzles) automatically to prevent from drying. If you unplug the power cord from the wall outlet before the **ON** lamp is turned off, the print head will not be capped properly and this will cause drying or clogging.

When Unplugging the Printer, make sure that the **ON** lamp is not lit.

Print periodically!

Just as the tip of a felt pen becomes dry and unusable if it has not been used for a long time, even if it is capped, the print head too, may become dried or clogged if the printer has not been used for a long time. We recommend you to use the printer at least once a month.

Main Components and Their Use

- Main Components
- Power Supply
- LCD and Operation Panel
- Entering Numbers, Letters, and Symbols

Main Components

- Front View
- Rear View
- Inside View
- Operation Panel

Front View

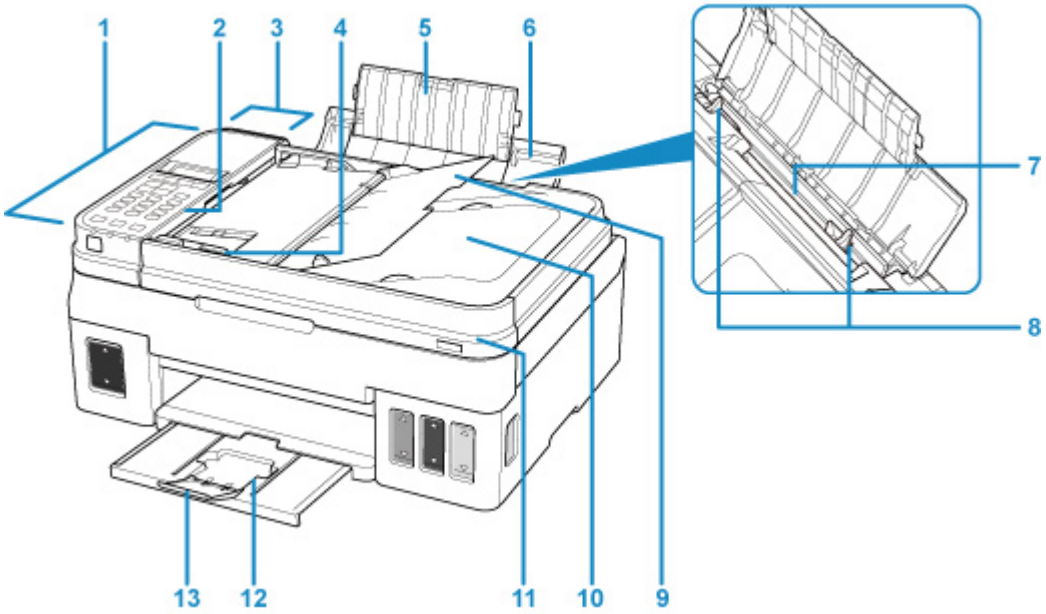

(1) ADF (Auto Document Feeder)

Load a document here. The documents loaded in the document tray are scanned automatically one sheet at a time.

- Loading Documents in the ADF (Auto Document Feeder)

(2) operation panel

Use to change the settings of the printer or to operate it.

- Operation Panel

(3) document feeder cover

Open when clearing jammed documents.

(4) document guide

Adjust this guide to match the width of document in the ADF.

(5) paper support extension

Open to load paper in the rear tray.

(6) paper support

Open to load paper in the rear tray.

(7) rear tray

Load paper here. Two or more sheets of the same size and type of paper can be loaded at the same time, and fed automatically one sheet at a time.

- Loading Plain Paper / Photo Paper
- Loading Envelopes

(8) paper guides

Align with both sides of the paper stack.

(9) document tray

Open to load a document in the ADF. You can load two or more sheets of document of the same size and thickness. Load the document with the side you want to scan facing up.

(10) document output slot

Documents scanned from the ADF are delivered here.

(11) document cover

Open to load an original on the platen glass.

(12) paper output tray

Printed paper is ejected. Open before printing.

(13) output tray extension

Open to support ejected paper.

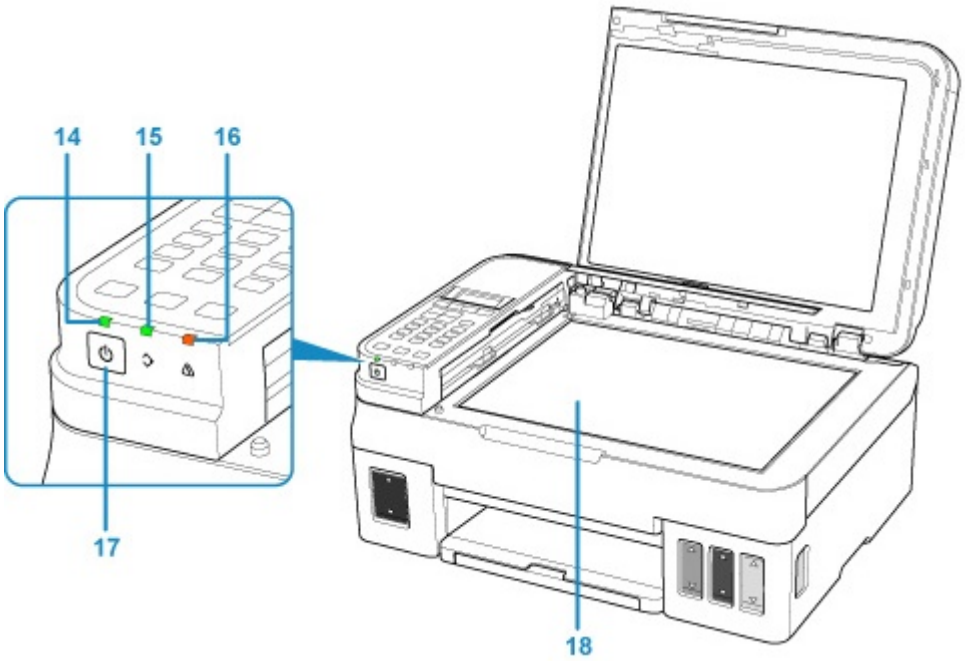

(14) ON lamp

Lights after flashing when the power is turned on.

(15) FAX Memory lamp

Lights or flashes depending on the document stored in the printer's memory.

Lights:

Printed received document or unsent document is stored in the printer's memory.

Flashes:

Unprinted received document is stored in the printer's memory.

(16) Alarm lamp

Lights or flashes when an error occurs.

(17) ON button

Turns the power on or off. Before turning on the power, make sure that the document cover is closed.

(18) platen glass

Load an original here.

Rear View

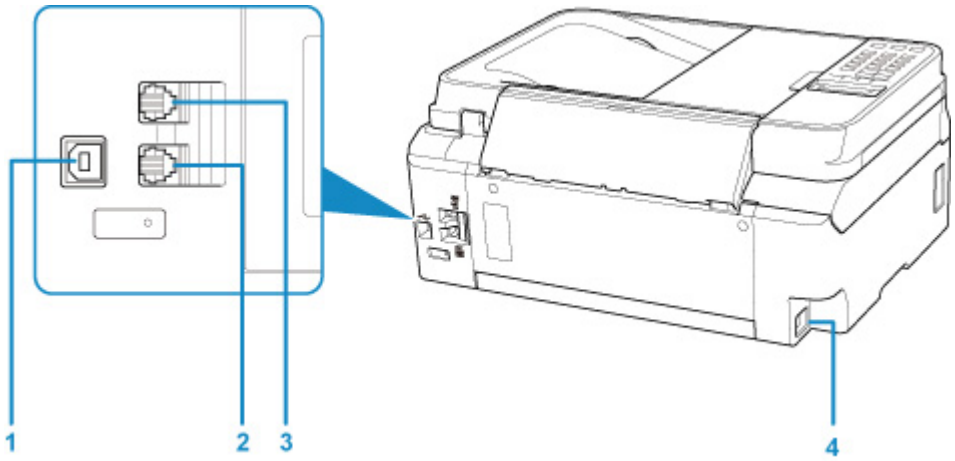

(1) USB port

Plug in the USB cable to connect the printer with a computer.

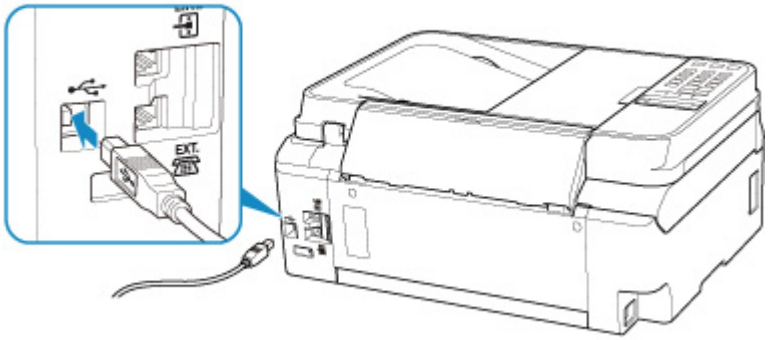

(2) external device jack

Connect an external device such as telephone or answering machine.

(3) telephone line jack

Connect the telephone line.

(4) power cord connector

Plug in the supplied power cord.

Important

- Do not touch the metal casing. This can cause trouble.
- Do not plug in or unplug the USB cable while the printer is printing or scanning with the computer. This can cause trouble.

Inside View

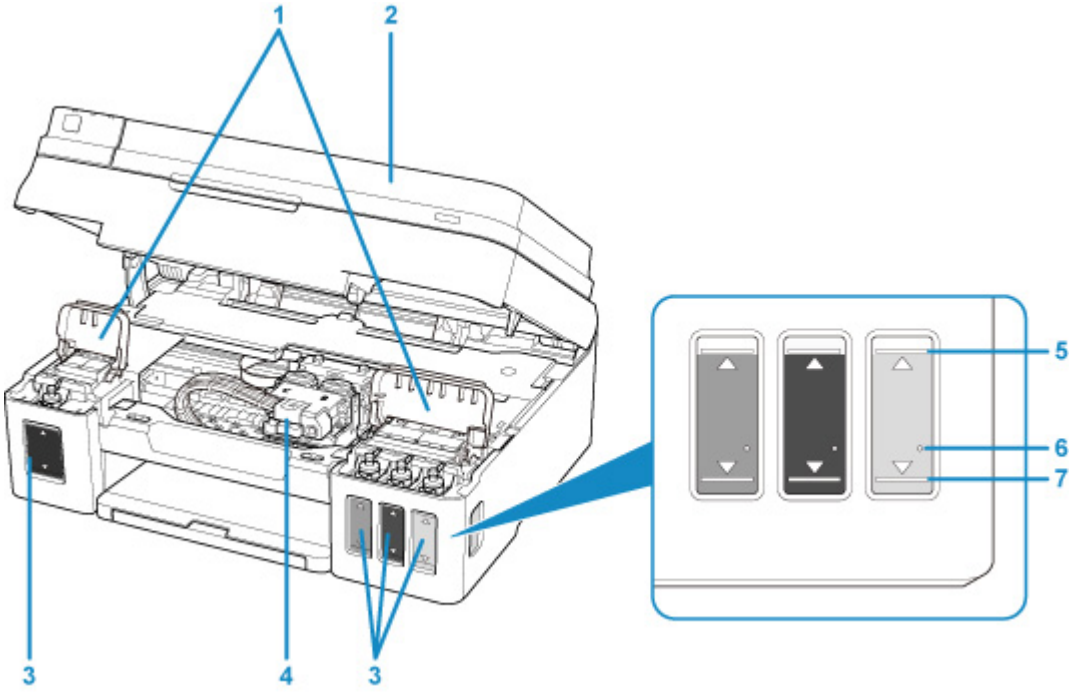

(1) ink tank covers

Open to refill ink tanks.

(2) scanning unit / cover

Scans originals. Open to refill ink tanks or to remove jammed paper.

(3) ink tanks

The black ink tank is on the left, and the color ink tanks (cyan, magenta, and yellow) are on the right.

If any ink levels are low, refill the low tanks.

(4) cartridge holder

Install the cartridge here.

Note

- For details on refilling ink tanks, see Refilling Ink Tanks.

(5) Upper limit line

Indicates the maximum capacity of the ink.

(6) Single dot

Indicates the amount of ink required when performing ink flush.

(7) Lower limit line

Indicates the lower limit of the sufficient amount of ink to print. Refill the ink tank before the amount of ink is below this line.

Operation Panel

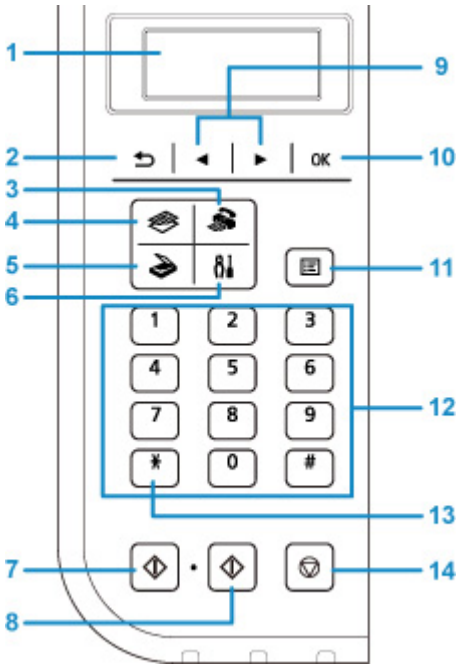

(1) LCD (Liquid Crystal Display)

Displays messages, menu items, and the operational status.

(2) Back button

Returns the LCD to the previous screen.

(3) FAX button

Switches the printer to the fax mode.

(4) COPY button

Switches the printer to the copy mode.

(5) SCAN button

Switches the printer to the scan mode.

(6) Setup button

Displays the **Setup menu** screen. With this menu, you can perform printer maintenance and change printer settings.

(7) Black button

Starts black & white copying, scanning, faxing, etc.

(8) Color button

Starts color copying, scanning, faxing, etc.

(9) ◄ and ► buttons

Used to select a menu or setting item. The ◄ ► button is also used when entering characters.

LCD and Operation Panel

(10) OK button

Finalizes the selection of a menu or setting item. This button is also used to resolve an error or ejects documents in the ADF (Auto Document Feeder).

(11) Menu button

Displays the **Copy menu**, **Scan menu**, or **FAX menu** screen.

(12) Numeric buttons

Used to enter numerical values such as the number of copies, as well as fax/telephone numbers and characters.

(13) Tone button

Switches to tone dialing temporarily if your printer is connected to a rotary pulse line.

(14) Stop button

Cancels operation when print, copy, scan, or fax transmission/reception job is in progress.

Note

- The printer makes the beep sound when pressing keypad buttons on the operation panel. The keypad sound can be enabled or disabled in **Sound control** of **Dev. user settings**.

  Sound control

Power Supply

- Confirming that the Power Is On
- Turning the Printer On and Off
- Checking the Power Plug/Power Cord
- Unplugging the Printer

Confirming that the Power Is On

The **ON** lamp is lit when the printer is turned on.

Even if the LCD is off, if the **ON** lamp is lit, the printer is on.

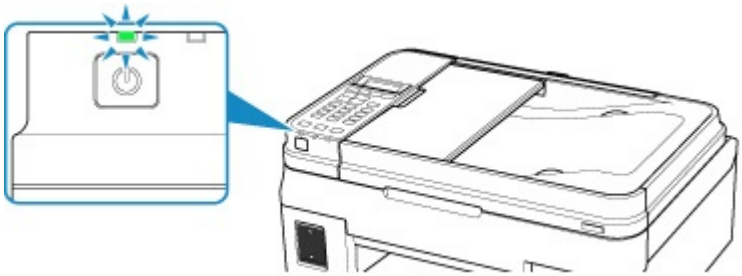

Note

- It may take a while for the printer to start printing immediately after you turn on the printer.
- The LCD will turn off if the printer is not operated for about 10 minutes. To restore the display, press any button except the **ON** button or perform the print operation. You cannot change the wait time before the LCD turns off.

Turning the Printer On and Off

Turning on the printer

1. Press the **ON** button to turn on the printer.

   The **ON** lamp flashes and then remains lit.

   Confirming that the Power Is On

Note

- It may take a while for the printer to start printing immediately after you turn on the printer.
- If an error message is displayed on the LCD, see An Error Occurs.
- You can set the printer to automatically turn on when a print or scan operation is performed from a computer connected by USB cable or wireless network. This feature is set to off by default.

  From the printer

  ECO settings

  From the computer

  - For Windows:

    Managing the Printer Power

  - For macOS:

    Managing the Printer Power

Turning off the printer

1. Press the **ON** button to turn off the printer.

   When the **ON** lamp stops flashing, the printer is turned off.

Important

- When you unplug the power cord after turning off the printer, be sure to confirm that the **ON** lamp is off.

Note

- You can set the printer to automatically turn off when no operations are performed or no print jobs are sent to the printer for a certain interval. This feature is set to on by default.

  From the printer

  ■ ECO settings

  From the computer

  - For Windows:

    ■ Managing the Printer Power

  - For macOS:

    ■ Managing the Printer Power

Checking the Power Plug/Power Cord

Unplug the power cord once a month to confirm that the power plug/power cord does not have anything unusual described below.

- The power plug/power cord is hot.
- The power plug/power cord is rusty.
- The power plug/power cord is bent.
- The power plug/power cord is worn.
- The power plug/power cord is split.

⚠ Caution

- If you find anything unusual with the power plug/power cord described above, Unplugging the Printer and call for service. Using the printer with one of the unusual conditions above may cause a fire or an electric shock.

Unplugging the Printer

To unplug the power cord, follow the procedure below.

Important

- When you unplug the power cord, press the **ON** button, then confirm that the **ON** lamp is off. Unplugging the power cord while the **ON** lamp is lit or flashing may cause drying or clogging of the print head and print quality may be reduced.
- If the power cord is unplugged, the date/time settings will be reset and all documents stored in the printer's memory will be lost. Send or print a necessary document before unplugging the power cord.

1. Press the **ON** button to turn the printer off.

2. Confirm that the **ON** lamp is off.

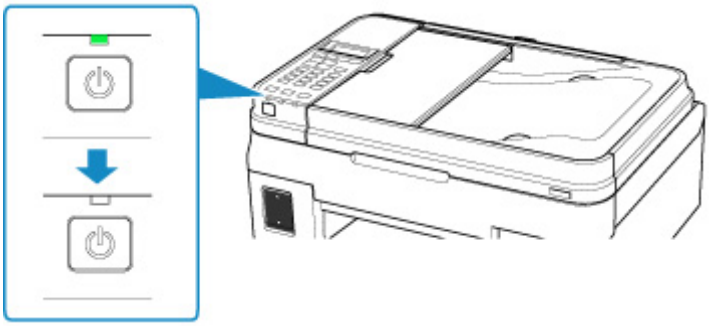

3. Unplug the power cord.

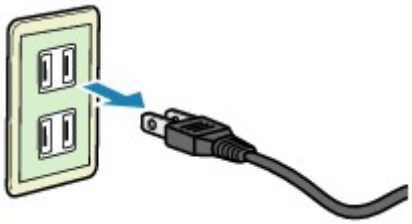

The specification of the power cord differs depending on the country or region of use.

LCD and Operation Panel

The mode button (A) on the operation panel allows you to switch between the copy mode, scan mode, fax mode, and setup menu screen.

Pressing the **Menu** button (B) in the respective modes shows the menu screen to select various functions or settings.

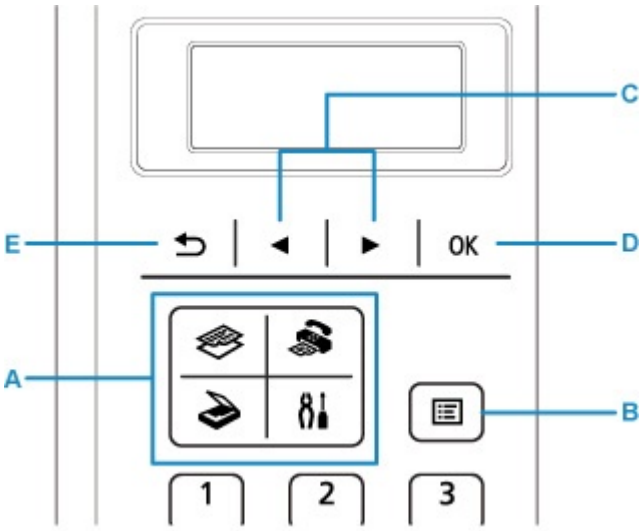

Selecting a Menu or Setting Item

On the menu screen or settings screen, use the ◄ ► button (C) to select an item or option, then press the **OK** button (D) to proceed with the procedure.

To return to the previous screen, press the **Back** button (E).

Example: Changing the scan contrast for faxing.

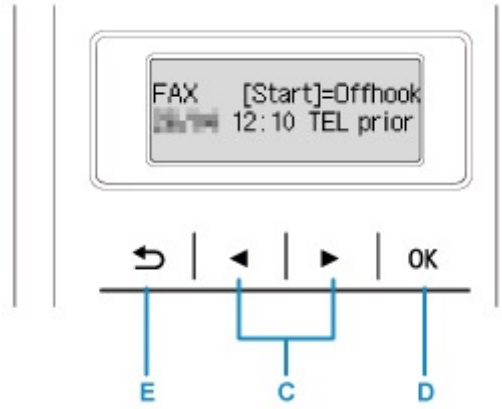

Press the **Menu** button in the Fax standby screen.

Press the ◄ ► button (C) to select **FAX TX settings**.

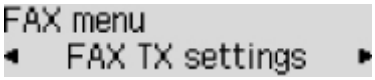

Press the **OK** button (D).

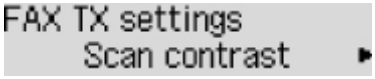

Select **Scan contrast**, press the **OK** button (D).

Use the ◄ ► button (C) to change the contrast, then press the **OK** button (D).

Network Status Indication

Wireless LAN setting and the network status indicate by the icon.

Wi-Fi icon is displayed on the LCD after pressing each mode button, Wireless LAN is enabled and the printer is connected to the wireless router.

Depending on the signal state, the icon will change.

You can use the printer over a wireless LAN without any problems.

(Signal strength: 81 % or more)

The problem such as the printer cannot print may occur according to the network status. We recommend placing the printer near the wireless router.

(Signal strength: 51 % or more)

The problem such as the printer cannot print may occur. Place the printer near the wireless router.

(Signal strength: 50 % or less)

Wireless LAN is enabled but the printer is not connected to the wireless router.

Note

- When Wireless LAN is disabled, Wi-Fi icon is not displayed.

Entering Numbers, Letters, and Symbols

Use the Numeric buttons to enter or edit such information as unit name, a recipient's name for the directory, etc.

Switching the Input Mode

Each time the **Tone** button is pressed, the input mode is switched.

The current input mode appears at the upper right corner of the LCD.

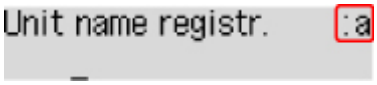

Note

- Only numbers and symbols that are available for the type of information you are entering are displayed, such as numbers for telephone or fax number input.

Entering Numbers, Letters, and Symbols

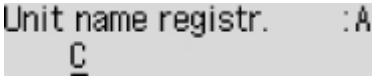

Press the **Tone** button to switch the input mode.

Use the Numeric buttons to enter the desired characters.

- To insert a space

  Press the # button five times.

- To delete the last entered character

  Press the **Back** button.

Editing Entered Numbers, Letters, and Symbols

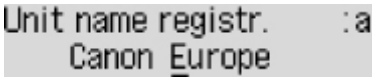

Press the ◄ or ► button to move the cursor under the position you want to edit.

- To insert a space

  Press the # button five times.

- To insert a character

  Move the cursor under the character to the right of the insertion position, then enter the character. The character on the cursor will move to the right and the new character will be inserted.

- To delete a character

  Move the cursor under the character, then press the **Back** button.

List of Characters Assigned to Each Numeric Button

For Fax/Telephone Number, Name, Number of Copies

Button	Lowercase mode (:a)	Uppercase mode (:A)	Numeric mode (:1)	Fax/Tele-phone no.
1			1	1
2	abcåäáàãâæç	ABCÅÄÁÀÃÂÆÇ	2	2
3	defëéèê	DEFËÉÈÊ	3	3
4	gh i ï í ì î	GH I Ï Í Ì Î	4	4
5	jkl	JKL	5	5
6	mnoñøöóòõô	MNOÑØÖÓÒÕÔ	6	6
7	pqrsþ	PQRSÞ	7	7
8	tuvüúùû	TUVÜÚÙÛ	8	8
9	wxyzý	WXYZÝ	9	9
0			0	0
#	. @ - _ SP*1 ★# ! " , ; : ^ ` = / | ' ? $ % & + ( ) [ ] { } < >			#
✱	Switch the input mode.			★

*1 "SP" indicates a space.

For LAN Settings

Button	Lowercase mode (:a)	Uppercase mode (:A)	Numeric mode (:1)
1			1
2	abc	ABC	2
3	def	DEF	3
4	gh i	GH I	4
5	jkl	JKL	5
6	mno	MNO	6

7	pqrs	PQRS	7
8	tuv	TUV	8
9	wxyz	WXYZ	9
0			0
#	. @ - _ SP*2 ✱# ! " , ; : ^ ` = / | ' ? $ % & + ( ) [ ] { } < > \ ~		
✱	Switch the input mode.		

*2 "SP" indicates a space.

Changing Settings

- Changing Printer Settings from Your Computer (Windows)
- Changing Printer Settings from Your Computer (macOS)
- Changing Settings from Operation Panel

Changing Printer Settings from Your Computer (Windows)

- Changing the Print Options
- Registering a Frequently Used Printing Profile
- Setting the Ink Tank to be Used
- Managing the Printer Power
- Changing the Printer Operation Mode

Changing the Print Options

You can change the detailed printer driver settings for print data that is sent from an application software.

Specify this option if you encounter print failures such as part of an image data being cut off.

1. Open the printer driver setup window

2. Click **Print Options...** on the **Page Setup** tab

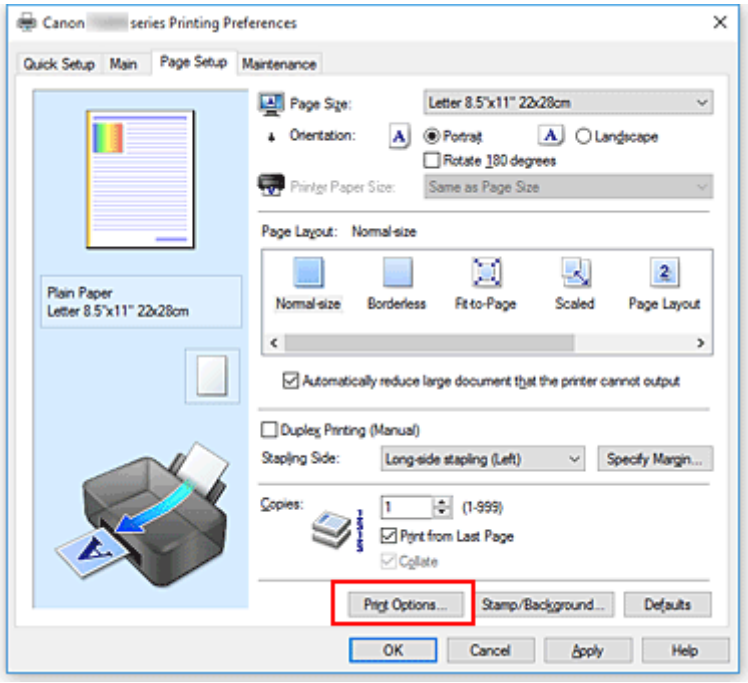

The **Print Options** dialog box opens.

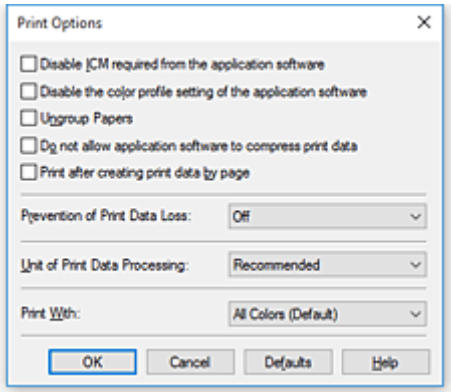

3. Change the individual settings

   If necessary, change the setting of each item, and then click **OK**.

   The **Page Setup** tab is displayed again.

Registering a Frequently Used Printing Profile

You can register the frequently used printing profile to **Commonly Used Settings** on the **Quick Setup** tab. Unnecessary printing profiles can be deleted at any time.

Registering a Printing Profile

1. Open the printer driver setup window

2. Set the necessary items

   From **Commonly Used Settings** on the **Quick Setup** tab, select the printing profile to be used and if necessary, change the settings after **Additional Features**.
   You can also register necessary items on the **Main** and **Page Setup** tabs.

3. Click **Save...**

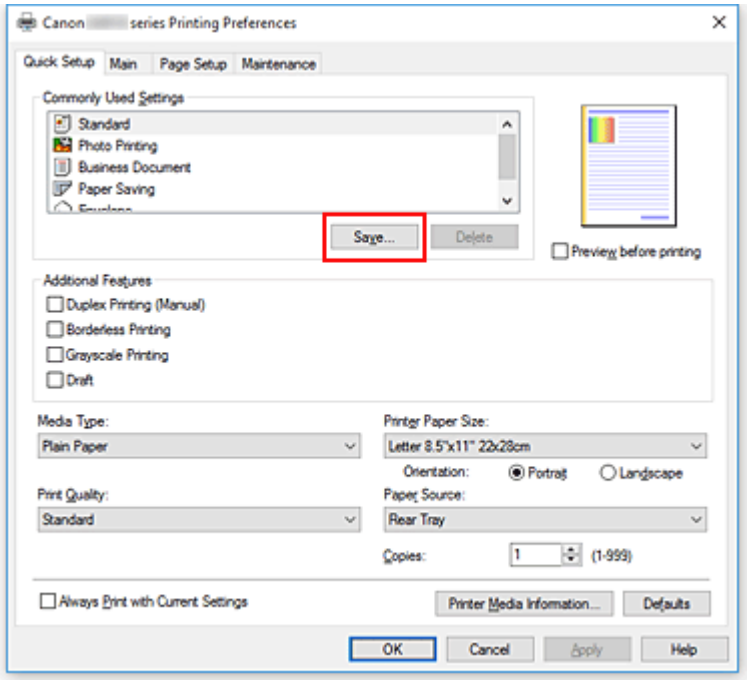

   The **Save Commonly Used Settings** dialog box opens.

4. Save the settings

   Enter a name in the **Name** field. If necessary, click **Options...**, set the items, and then click **OK**.
   In the **Save Commonly Used Settings** dialog box, click **OK** to save the print settings and return to the

Quick Setup tab.
The name and icon are displayed in **Commonly Used Settings**.

Important

- To save the page size, orientation, and number of copies that was set in each sheet, click **Options...**, and check each item.

Note

- When you re-install the printer driver or upgrade the printer driver version, the print settings that are already registered will be deleted from **Commonly Used Settings**.
  Registered print settings cannot be saved and preserved. If a profile is deleted, register the print settings again.

Deleting Unnecessary Printing Profile

1. Select the printing profile to be deleted

   Select the printing profile you want to delete from the **Commonly Used Settings** list on the **Quick Setup** tab.

2. Delete the printing profile

   Click **Delete**. When the confirmation message appears, click **OK**.
   The selected printing profile is deleted from the **Commonly Used Settings** list.

Note

- Printing profiles that are registered in the initial settings cannot be deleted.

Setting the Ink Tank to be Used

This feature enables you to specify the most appropriate ink tank among installed ink tanks according to an intended use.

1. Open the printer driver setup window

2. Click **Print Options...** on the **Page Setup** tab

   The **Print Options** dialog box appears.

3. Select the ink tank to be used from **Print With**

   Select the ink tank to be used for printing and click **OK**.
   When you perform printing, the specified ink tank will be used.

Important

- When the following settings are specified, **Black Only** does not function because the printer uses an ink tank other than black to print documents.
  - Other than **Plain Paper**, **Envelope**, **Ink Jet Hagaki (A)**, **Hagaki K (A)**, **Hagaki (A)**, or **Hagaki** is selected for **Media Type** on the **Main** tab
  - **Borderless** is selected from the **Page Layout** list on the **Page Setup** tab
- Do not detach the ink tank that is not in use. Printing cannot be performed while either ink tank is detached.

Managing the Printer Power

This function allows you to manage the printer power from the Canon IJ Printer Assistant Tool.

Power Off

The **Power Off** function turns off the printer. When you use this function, you will not be able to turn the printer on from the Canon IJ Printer Assistant Tool.

1. Open Canon IJ Printer Assistant Tool

2. Execute power off

   Click **Power Off**. When the confirmation message appears, click **OK**.

   The printer power switches off.

   Important

   - You cannot receive faxes when the printer is switched off.

Auto Power

Auto Power allows you to set **Auto Power On** and **Auto Power Off**.
The **Auto Power On** function automatically turns on the printer when data is received.
The **Auto Power Off** function automatically turns off the printer when there are no operations from the printer driver or the printer for a specified period of time.

1. Open the Canon IJ Printer Assistant Tool

2. Make sure that the printer is on and then click **Auto Power**

   The **Auto Power Settings** dialog box opens.

   Note

   - If the printer is off or if communication between the printer and the computer is disabled, an error message may appear because the computer cannot collect the printer status.
     If this happens, click **OK** to display the most recent settings specified on your computer.

3. If necessary, complete the following settings:

   Auto Power On
   Specifying **Enable** from the list will turn the printer on upon receipt of print data.

   Auto Power Off
   Specify the time from the list. When this time lapses without any operations from the printer driver or the printer, the printer is turned off automatically.

4. Apply the settings

   Click **OK**. When the confirmation message appears, click **OK**.

   The setting is enabled after this. When you want to disable this function, select **Disable** from the list according to the same procedure.

Note

- When the printer is turned off, the Canon IJ Status Monitor message varies depending on the **Auto Power On** setting.
  When the setting is **Enable**, "Printer is standing by" is displayed. When the setting is **Disable**, "Printer is offline" is displayed.

Important

- When you use the printer by connecting it to a telephone line via a modular cable, you can set **Auto Power Off** but the power will not be turned off automatically.

Changing the Printer Operation Mode

If necessary, switch between various modes of printer operation.

Custom Settings

1. Open the Canon IJ Printer Assistant Tool

2. Make sure that the printer is on, and then click **Custom Settings**

   The **Custom Settings** dialog box opens.

   Note

   - If the printer is off or if communication between the printer and the computer is disabled, an error message may appear because the computer cannot collect the printer status.
     If this happens, click **OK** to display the most recent settings specified on your computer.

3. If necessary, complete the following settings:

   Prevent paper abrasion

   The printer can increase the gap between the print head and the paper during high-density printing to prevent paper abrasion.
   Check this check box to prevent paper abrasion.

   Align heads manually

   Usually, the **Print Head Alignment** function in the Canon IJ Printer Assistant Tool is set to automatic head alignment, but you can change it to manual head alignment.
   If the printing results of automatic print head alignment are not satisfactory, perform manual head alignment.
   Check this check box to perform the manual head alignment. Uncheck this check box to perform the automatic head alignment.

   Rotate 90 degrees left when orientation is [Landscape]

   On the **Page Setup** tab, you can change the rotation direction of the **Landscape** in the **Orientation**.
   To rotate the print data 90 degrees to the left during printing, select this item. To rotate the print data 90 degrees to the right during printing, clear this item.

   Important

   - Do not change this setting while the print job is displayed in the print wait list. Otherwise, characters may be omitted or the layout may become corrupt.

   Don't detect mismatch of paper settings when printing from computer

   When you print documents from your computer, the paper settings in the printer driver and the paper information registered on the printer do not match, this setting disables the message display and allows you to continue printing.
   To disable detection of paper setting mismatches, select this check box.

Ink Drying Wait Time

You can set the length of the printer rest time until printing of the next page begins. Moving the slider to the right increases the pause time, and moving the slider to the left decreases the time. If the paper gets stained because the next page is ejected before the ink on the printed page dries, increase the ink drying wait time.
Reducing the ink drying wait time speeds up printing.

4. Apply the settings

Click **OK** and when the confirmation message appears, click **OK**.

The printer operates with the modified settings hereafter.

Changing Settings from Operation Panel

- Changing Settings from Operation Panel
- Setting Items on Operation Panel
- FAX settings
- Print settings
- LAN settings
- Dev. user settings
- Language selection
- Firmware update
- Feed settings
- Reset setting
- Ink notification set.
- Web service setup
- System information
- ECO settings
- Quiet setting

Changing Settings from Operation Panel

This section describes the procedure to change the settings in the **Device settings** screen, taking the steps to specify **Extended copy amt.** as an example.

Note

- The * (asterisk) on the LCD indicates the current setting.

1. Make sure that printer is turned on.

2. Press the **Setup** button.

   The **Setup menu** screen is displayed.

3. Select **Device settings** and then press the **OK** button.

   The **Device settings** screen is displayed.

4. Select a setting item to adjust and then press the **OK** button.

   Device settings
   Print settings ▸

   The setting screen for the selected item is displayed.

5. Select a setting item and then press the **OK** button.

   Print settings
   ◂ Extended copy amt.

6. Select a setting to specify and then press the **OK** button.

   Extended copy amt.
   *Amount: Small ▸

For more on setting items on the operation panel:

- Setting Items on Operation Panel

Setting Items on Operation Panel

Items for Printer

- FAX settings
- Dev. user settings
- Language selection
- Web service setup
- ECO settings
- Quiet setting

Items for Paper/Printing

- Print settings
- Feed settings
- Ink notification set.

Items for Maintenance/Management

- System information
- Firmware update
- LAN settings
- Reset setting

FAX settings

Select this menu from **Setup menu**.

- Easy setup
- TEL no. registration
- FAX user settings
- Adv. FAX settings
- Auto print settings
- Security control

Note

- Before changing the settings, you can confirm the current settings by printing USER'S DATA LIST.

  - Summary of Reports and Lists

Easy setup

The printer must be set up depending on your telephone line and use of the faxing function. Follow the procedure according to the instructions on the LCD.

Note

- You can specify the setup setting individually or the advanced setting.

  For details on how to specify the setting:

  - Preparing for Faxing

TEL no. registration

You can register the recipient's fax/telephone number to the printer.

- Registering Recipients Using Operation Panel of Printer

FAX user settings

- **Unit TEL no. registr.**

  Registers your fax/telephone number printed on sent faxes.

  - Registering User Information

- **Unit name registr.**

  Registers your name printed on sent faxes.

  - Registering User Information

- **Telephone line type (Country or region of purchase other than China)**

  Selects the telephone line type setting for the printer.

  - Setting Telephone Line Type

Note

- This setting may not be available depending on the country or region of purchase.

- **TEL line auto select (China only)**

  If you select **ON**, the telephone line type is selected automatically.

  If you select **OFF**, you can select the telephone line type manually.

  Setting Telephone Line Type

Adv. FAX settings

- **Err reduction (VoIP)**

  If you select **Reduce**, it may be possible to reduce the incidence of communication errors when connecting to internet line such as IP phone.

  Note

  - When **Reduce** is selected, V.34 (Super G3) can not be used. Communication time generally becomes longer than when communicating with V.34 (super G3).
  - This setting has priority even if you select **33600 bps** for **TX start speed** or **RX start speed**.

- **Auto redial**

  Enables/disables automatic redialing.

  If you select **ON**, you can specify the maximum number of redial attempts and the length of time the printer waits between redial attempts.

- **Dial tone detect**

  Avoids mistransmission when reception and transmission occur at the same time.

  If you select **ON**, the printer transmits the fax after confirming the dial tone.

  Note

  - This setting may not be available depending on the country or region of purchase.

- **Pause time settings**

  Sets the length of pause time for each when you enter "P" (pause).

- **TTI position**

  Selects the position of the sender information (outside or inside the image area).

- **Remote RX**

  Enables/disables remote reception.

  If you select **ON**, you can specify the remote reception ID.

  Remote Reception

- **Color transmission**

  When faxing color documents using the ADF, selects whether to convert them into black & white data if the recipient's fax device does not support color faxing.

  If you select **If incompatible, end**, the printer does not send color documents when the recipient's fax device does not support color faxing.

- **RX image reduction**

  Enables/disables automatic reduction of incoming faxes so that they fit in the selected paper.

  If you select **ON**, you can select the image reduction direction.

- **Adv. communication**

  - **ECM TX**

    Selects whether to send faxes in Error Correction Mode (ECM).

    Transmission/Reception of Faxes Using ECM

  - **ECM RX**

    Selects whether to receive faxes in Error Correction Mode (ECM).

    Transmission/Reception of Faxes Using ECM

  - **TX start speed**

    Selects the fax transmission speed.

    Ex:

    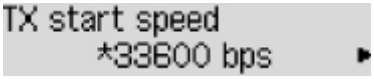

    The following settings are available.

    33600 bps/14400 bps/9600 bps/4800 bps

    The * (asterisk) on the LCD indicates the current setting.

    The fax transmission start speed will be faster as the value is bigger.

    Some of settings are not available depending on the country or region of purchase.

    When the telephone line condition or connection is poor, selecting a lower transmission start speed may solve transmission problems.

  - **RX start speed**

    Selects the fax reception speed.

    Ex:

    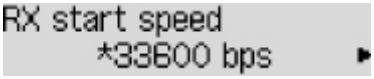

    The following settings are available.

    33600 bps/14400 bps/9600 bps/4800 bps

    The * (asterisk) on the LCD indicates the current setting.

    The fax reception start speed will be faster as the value is bigger.

Some of settings are not available depending on the country or region of purchase.

When the telephone line condition or connection is poor, selecting a lower reception start speed may solve reception problems.

Auto print settings

- **Received documents**

  Selects whether to print the received fax automatically when receiving a fax.

  If you select **Do not print**, the received fax is stored in the printer's memory.

  For details on the received fax stored in the printer's memory:

  Document Stored in Printer's Memory

- **Activity report**

  Selects whether to print ACTIVITY REPORT automatically.

  If you select **Print**, the printer prints ACTIVITY REPORT for the 20 histories of sent and received faxes automatically.

  For details on the procedure to print ACTIVITY REPORT manually:

  Summary of Reports and Lists

- **TX report**

  Selects whether to print TX REPORT/ERROR TX REPORT automatically after sending a fax.

  If you print the report, select **Print error only** or **Print for each TX**.

  If you select **Print error only** or **Print for each TX**, you can specify the print setting that the first page of the fax is printed along with the report.

- **RX report**

  Selects whether to print RX REPORT automatically after receiving a fax.

  If you print RX REPORT, select **Print error only** or **Print for each RX**.

Security control

- **FAX no. re-entry**

  If you select **ON**, you can set the printer to send faxes after using the Numeric buttons to enter the number twice. By using this setting, you can avoid the mistransmission of faxes.

  Preventing Mistransmission of Faxes

- **Check RX FAX info**

  If you select **ON**, the printer checks whether the recipient's fax device information matches the dialed number. If it matches the number, the printer starts to send faxes.

  Preventing Mistransmission of Faxes

- **Hook setting**

  If you select **Enable**, you can use the on hook dial function.

- **FAX RX reject**

  If you select **ON**, the printer rejects the reception of faxes with no sender information or faxes from specific senders.

  Rejecting Fax Reception

- **Caller rejection**

  If you subscribe to the Caller ID service, the printer detects the sender's Caller ID. If the sender's ID matches the condition specified in this setting, the printer rejects the phone call or fax reception from the sender.

  If you select **Subscribed**, you can specify the settings of rejection.

  Using Caller ID Service to Reject Calls

Note

- This setting may not be supported depending on the country or region of purchase. Contact your telephone company to confirm whether it provides this service.

Print settings

Select this menu from **Device settings** in **Setup menu**.

- **Prevent abrasion**

  Use this setting only if the print surface becomes smudged.

  Important

  - Be sure to set this back to **OFF** after printing since it may result in lower printing speed or lower print quality.

- **Extended copy amt.**

  Selects the amount of image that extends off the paper when copying in Borderless (full).

  Slight cropping may occur at the edges since the copied image is enlarged to fill the whole page. You can change the width to be cropped from the borders of the original image as needed.

  Cropped area will be larger if **Amount: Large** is selected.

  Note

  - If printouts contain margins even though you are copying in Borderless, specifying **Amount: Large** for this setting may help solve the problem.

LAN settings

Select this menu from **Device settings** in **Setup menu**.

- Wireless LAN
- Wireless Direct
- Print LAN details
- Common settings

Wireless LAN

- **Wireless LAN setup**

  Selects the setup method for wireless LAN connection.

  Note

  - You can also enter this setting menu by selecting **Wireless LAN setup** from the **Setup menu** screen.

  - **Easy WL connect**

    Select if you specify the settings of the access point information to the printer directly from a device (such as a smartphone) without operating the wireless router. Follow the on-screen instructions of the connecting device for the setup procedure.

  - **Manual connect**

    Select when you perform settings for wireless LAN manually using the operation panel of the printer.

  - **WPS (Push button)**

    Select when you perform settings for wireless LAN using a wireless router supporting a Wi-Fi Protected Setup (WPS) push button method. Follow the on-screen instructions during setup.

  - **Other setup**

    - **Manual setup**

      Select when you perform settings for wireless LAN manually. You can specify multiple WEP keys.

    - **WPS (PIN code)**

      Select when you perform settings for wireless LAN using a wireless router supporting a Wi-Fi Protected Setup (WPS) PIN code method. Follow the on-screen instructions during setup.

- **WLAN activ./inactiv.**

  Enables/disables wireless LAN.

Wireless Direct

- **Switch WL Direct**

  Enables/disables Wireless Direct.

- **Change name (SSID)**

Changes the identifier (SSID/the printer's name displayed on a Wi-Fi Direct compatible device) for Wireless Direct.

- **Change password**

  Changes the password for Wireless Direct.

- **Confirm request**

  Set whether the printer displays the confirmation screen when a Wi-Fi Direct compatible device is connecting the printer.

Print LAN details

You can print out the network settings of the printer such as its IP address and SSID.

For more information on the printer's network setting is printed out:

Printing Network Settings

Important

- The network settings printout contains important information about your network. Handle it with care.

Common settings

- **Set printer name**

  Specifies the printer name. You can use up to 15 characters for the name.

  ### Note

  - You cannot use the same printer name as that already used for other LAN connected devices.
  - You cannot use a hyphen for the initial or last character of the printer name.

- **TCP/IP settings**

  Performs IPv4 or IPv6 setting.

- **WSD setting**

  Setting items when you use WSD (one of the network protocols supported in Windows).

  Enable/disable WSD
  Selects whether WSD is enabled or disabled.

  ### Note

  - When this setting is enabled, the printer icon is displayed on the Network Explorer in Windows.

  Optimize WSD-In
  Selecting **Active** allows you to receive the WSD printing data faster.

  WSD scan from dev.
  Selecting **Active** allows you to transfer the scanned data to the computer using WSD.

  Timeout setting
  Specifies the timeout length.

- **Bonjour settings**

  Setting items for LAN using Bonjour for macOS.

  Enab./disab. Bonjour

  Selecting **Active** allows you to use Bonjour to perform the network settings.

  Enter service name

  Specifies the Bonjour service name. You can use up to 48 characters for the name.

  Note

  - You cannot use the same service name as that already used for other LAN connected devices.

- **LPR setting**

  Enables/disables the LPR setting.

- **RAW protocol**

  Enables/disables RAW printing.

- **LLMNR**

  Enables/disables LLMNR (Link-Local Multicast Name Resolution). Selecting **Active** allows the printer to detect printer's IP address from the printer name without a DNS server.

- **IPsec settings**

  Selecting **Active** allows you to specify the IPsec settings.

Dev. user settings

Select this menu from **Device settings** in **Setup menu**.

- **Date/time setting**

  Sets the current date and time.

  Setting Sender Information

  Important

  - If a power failure occurs or you unplug the power cord, the date/time settings will be reset.

- **Date display format**

  Sets the format of dates displayed on the LCD and printed on sent faxes.

- **DST setting**

  Some countries adopt the daylight saving time (summer time) system that shifts the clock time forward at certain periods of the year.

  You can set your printer to automatically change the time by registering the date and time that daylight saving time (summer time) begins and ends.

  Setting Sender Information

  Note

  - This setting may not be available depending on the country or region of purchase.

- **Sound control**

  Selects whether the beep sound in operations is enabled or not.

  - **Keypad sound**

    Selects whether the beep sound is enabled or not when pressing the buttons on the operation panel.

  - **Alarm sound**

    Selects whether the alarm is enabled or not.

  - **Line monitor sound**

    Selects whether the line monitor sound is enabled or not.

  - **Offhook alarm**

    Selects whether the alarm is enabled or not when the phone receiver is not put on the hook properly.

- **Country or region**

  Selects the country or region where you are using the printer.

  Note

  - This setting may not be available depending on the country or region of purchase.

- **Language selection**

  Changes the language for LCD messages and menus.

  Japanese / English / German / French / Italian / Spanish / Dutch / Portuguese / Norwegian / Swedish / Danish / Finnish / Russian / Ukrainian / Polish / Czech / Slovak / Hungarian / Slovene / Croatian / Romanian / Bulgarian / Turkish / Greek / Estonian / Latvian / Lithuanian / Simplified Chinese / Traditional Chinese / Korean / Indonesian / Vietnamese

- **Key repeat**

  Enables/Disables continuous input by pressing and holding down the ◄► button when setting the number of copies, the zoom ratio, etc.

- **Device info sending**

  Selects whether you will send the printer usage information to Canon server. The information sent to Canon will be utilized to develop better products. Select **ON** to send the printer usage information to Canon server.

- **Doc. remov. reminder**

  Selects whether the printer will display the reminder screen in case you forget to remove the original from the platen glass after scanning.

  Important

  - Depending on the type of original or the state of the document cover, forgetting to remove the original may not be detected.

Language selection

Changes the language for the messages and menus on the LCD.

- Language selection

Firmware update

Select this menu from **Device settings** in **Setup menu**.

You can update the firmware of the printer, check the firmware version, or perform settings of a notification screen.

Note

- Only **Current version** is available when **Inactive** is selected for **WLAN activ./inactiv.**.

- **Install update**

  Performs the firmware update of the printer. Follow the on-screen instructions to perform update.

  ### Important

  - When you use this function, make sure the printer is connected to the Internet.

  ### Note

  - If the firmware update is not complete, check the following and take an appropriate action.
    - Check the network settings such as a wireless router.
    - If **Cannot connect to the server; try again** is displayed on the LCD, press the **OK** button and try again after a while.

- **Current version**

  You can check the current firmware version.

- **Update notification**

  When **ON** is selected and the firmware update is available, the screen to inform you of the firmware update is displayed on the LCD.

- **DNS server setup**

  Performs settings for a DNS server. Select **Auto setup** or **Manual setup**. If you select **Manual setup**, follow the display on the LCD to perform settings.

- **Proxy server setup**

  Performs settings for a proxy server. Select **Use** or **Do not use**. If you select **Use**, follow the display on the LCD to perform settings.

Feed settings

Select this menu from **Device settings** in **Setup menu**.

By registering the paper size and the media type loaded on the rear tray, you can prevent the printer from misprinting by displaying the message before printing starts when the paper size or the media type of the loaded paper differs from the print settings.

For details:

- Paper Settings

- **Register paper info**

  Registers the paper size and the media type you load on the rear tray.

  Note

  - For more on the proper combination of paper settings you can specify by the printer driver (Windows) or on the LCD:

    - Paper Settings on the Printer Driver and the Printer (Media Type)
    - Paper Settings on the Printer Driver and the Printer (Paper Size)

- **Det. paper mismatch**

  If you select **ON**, the printer detects whether the paper size and the media type are identical with those registered in **Register paper info**. If printing starts with the settings that do not match, an error message is displayed on the LCD.

  Note

  - When **OFF** is selected, **Detect reinsertion** is disabled.

- **Detect reinsertion**

  If you select **ON**, the printer detects the cassette is reinserted. When the **Register paper info** screen is displayed, register the paper size and the media type.

Reset setting

Select this menu from **Device settings** in **Setup menu**.

Returns all settings you made to the printer back to the default. However, some data may not be changed, depending on the current usage state of your printer.

Important

- Depending on the setting item, it is necessary to perform connection or setup again after you have returned the setting back to the default.

- **Web service setup**

  Returns the Web service settings back to the default.

- **LAN settings**

  Returns the LAN settings back to the default.

- **Telephone no. data**

  Returns the telephone/fax number settings to default.

- **Setting data**

  Returns the settings such as the paper size, media type, or other setting items other than the LAN settings or the fax settings back to the default.

- **Device info sending**

  Returns only the device information sending settings back to the default.

- **FAX settings**

  Returns the fax settings back to the default. Disconnect the telephone line from the printer before you return this setting item back to the default.

  After resetting, perform setup again as necessary.

- **All data**

  Sets all settings you made to the printer back to the default. The administrator password specified by Remote UI or IJ Network Device Setup Utility reverts to the default setting.

  After resetting, perform setup again as necessary.

Note

- You cannot set the following setting items back to the default:
  - The language displayed on the LCD
  - The current position of the print head
  - CSR (Certificate Signing Request) for encryption method (SSL/TLS) setting
  - The country or region selected for **Country or region**

  You can delete the registered user's name or telephone number following the procedure below.

  1. Displays **Unit TEL no. registr.** or Displays **Unit name registr.**.

     Setting Sender Information

2. Delete all the numbers and the letters by pressing the **Back** button.
3. Press the **OK** button after deleting all the numbers and the letters.

- **ON** is selected for **Device info sending** on **Dev. user settings** after you have reset the setting to send device information. However, the printer does not send device information. Select **OFF** to disable the function to send device information.

Ink notification set.

Select this menu from **Setup menu**.

- **Ink notification**

  If **ON** is selected, the message appears on the LCD when ink runs out.

  Refilling Ink Tanks

  Note

  - The * (asterisk) on the LCD indicates the current setting.

  If this menu is changed **OFF** to **ON**, **For correct operation of the function, you must refill all ink tanks to the upper limit line** appears.

  ```
  For correct operation of
  [OK]Next
  ```

  Refill the ink tanks of all colors to the upper limit line and then press the **OK** button. If all the ink tanks are not refilled to the upper limit line, the remaining ink level is not detected correctly.

  Are all the ink tanks refilled to the upper limit line? appears.

  ```
  Are all the ink tanks refi
   <  Yes  >      No
  ```

  If **No** is selected, **Ink notification** can not be set to **ON**.

  Important

  - If the remaining ink level notification function is disabled, visually inspect the remaining ink and refill the ink tanks as necessary. Continuing printing with ink below the lower limit line of an ink tank may prevent satisfactory print quality or may cause malfunction or damage to the printer.

- **Reset ink lev. count**

  If you refill the ink tank when remaining ink level notification function is enabled and when the remaining ink error has not occurred, resets the remaining ink level count after refilling the ink tank to the upper limit line.

  Reset of the ink remaining amount count in one of the following ways.

  - Resetting the remaining ink level count for all colors
  - Resetting the remaining ink level count for some colors

  If you press the **OK** button, the following screen appears.

  ```
  The remaining ink level c
     Yes      <  No  >
  ```

  To reset the remaining ink level count for all colors, select **Yes**.

  To reset the remaining ink level count for some colors, select **No**.

  Important

  - When you reset the remaining ink level count, you must refill the ink tanks of all colors to the upper limit line. If you reset the remaining ink level count without refilling the ink tanks to the upper limit line, the remaining ink level count cannot be reset correctly.

- Refilling Ink Tanks

Web service setup

Select this menu from **Setup menu**.

- **Connection setup**

  The following setting items are available.

  - **GoogleCloudPrint**

    Registers/Deletes the printer to/from Google Cloud Print.

  - **IJCloudPrintingCtr**

    Registers/Deletes the printer to/from Canon Inkjet Cloud Printing Center.

- **DNS server setup**

  Performs settings for a DNS server. Select **Auto setup** or **Manual setup**. If you select **Manual setup**, follow the display on the LCD to perform settings.

- **Proxy server setup**

  Performs settings for a proxy server. Select **Use** or **Do not use**. If you select **Use**, follow the display on the LCD to perform settings.

System information

Select this menu from **Setup menu**.

- **Current version**

  Displays the current firmware version.

- **Printer name**

  Displays the printer name currently specified.

- **Serial number**

  Displays the printer serial number.

ECO settings

This setting allows you to turn on/off the printer automatically to save electricity.

- Turning on Printer Automatically
- Turning off Printer Automatically

Turning on Printer Automatically

You can enable the printer to turn on automatically when printing data is sent to the printer or the printer is operated for scanning from the computer.

1. Make sure that printer is turned on.
2. Press the **Setup** button.

   The **Setup menu** screen is displayed.
3. Select **ECO settings** and then press the **OK** button.
4. Select **Auto power on** and then press the **OK** button.
5. Select **ON** and then press the **OK** button.

Turning off Printer Automatically

You can enable the printer to turn off automatically when no operation is made or no printing data is sent to the printer for a specified period of time.

1. Make sure that printer is turned on.
2. Press the **Setup** button.

   The **Setup menu** screen is displayed.
3. Select **ECO settings** and then press the **OK** button.
4. Select **Auto power off** and then press the **OK** button.
5. Select a time to turn off the printer and then press the **OK** button.

Quiet setting

Enables this function on the printer if you want to reduce the operating noise, such as when printing at night. In addition, you can specify the time range to reduce the operating noise.

Important

- Set the current date and time in advance.

  Setting Sender Information

Follow the procedure below to perform setting.

1. Make sure that printer is turned on.

2. Press the **Setup** button.

   The **Setup menu** screen is displayed.

3. Select **Quiet mode** and then press the **OK** button.

4. Select **Use** or **Specify hrs of use** and then press the **OK** button.

   - When **Use** is selected:

     You can reduce the operating noise while printing is in progress.

   - When **Specify hrs of use** is selected:

     The screen to specify starting/ending time is displayed. Use the ◄► button to move the cursor under the desired position, use the Numeric buttons to enter the time, then press the **OK** button.

     Start time 21:00
     End time 07:00

     You can reduce the operating noise during the specified time.

Important

- Operating speed may be reduced compared to when **Do not use** is selected.
- This function may not be so effective depending on the printer's setting. Furthermore, certain noise, such as when the printer is preparing for printing, is not reduced.

Note

- You can set the quiet mode from the operation panel of the printer, the printer driver, or ScanGear (scanner driver). No matter how you set the quiet mode, the mode is applied when you perform operations from the operation panel of the printer or printing and scanning from the computer.

Specifications

General Specifications

Printing resolution (dpi)	4800* (horizontal) x 1200 (vertical) * Ink droplets can be placed with a pitch of 1/4800 inch at minimum.
Interface	**USB Port:** Hi-Speed USB *1 **LAN Port:** Wireless LAN: IEEE802.11n / IEEE802.11g / IEEE802.11b *2 *1 A computer that complies with Hi-Speed USB standard is required. Since the Hi-Speed USB interface is fully upwardly compatible with USB 1.1, it can be used at USB 1.1. *2 Setup possible through Standard setup, WPS (Wi-Fi Protected Setup), WCN (Windows Connect Now) or Easy wireless connect. USB and LAN can be used at the same time.
Print width	8 inches/203.2 mm (for Borderless Printing: 8.5 inches/216 mm)
Printable area	**Borderless printing:** Top/Bottom/Left/Right margin: 0.0 inch (0.0 mm) **Standard printing:** -Top margin: • 0.12 inches (3.0 mm) -Bottom margin: • 0.20 inches (5.0 mm) -Left margin: • Letter/Legal: 0.26 inches (6.4 mm) • Other sizes: 0.14 inches (3.4 mm) -Right margin: • Letter/Legal: 0.25 inches (6.3 mm) • Other sizes: 0.14 inches (3.4 mm)
Operating environment	**Temperature:** 41 to 95 °F (5 to 35 °C) **Humidity:** 10 to 90 % RH (no condensation) * The performance of the printer may be reduced under certain temperature and humidity conditions. Recommended conditions: **Temperature:** 59 to 86 °F (15 to 30 °C) **Humidity:** 10 to 80 % RH (no condensation) * For the temperature and humidity conditions of papers such as photo paper, refer to the paper's packaging or the supplied instructions.

Storage environment	**Temperature:** 32 to 104 °F (0 to 40 °C) **Humidity:** 5 to 95 % RH (no condensation)
Power supply	AC 100-240 V, 50/60 Hz (The supplied power cord is only for the country or region you purchased.)
Power consumption	**Printing (Copy):** 10 W or less **Standby (minimum):** 0.9 W or less *1*2 **OFF:** 0.2 W or less *1 *1 USB connection to PC *2 The wait time for standby cannot be changed.
External dimensions	Approx. 17.6 (W) x 13 (D) x 7.8 (H) inches Approx. 445 (W) x 330 (D) x 197 (H) mm * With the Paper Support and Paper Output Tray retracted.
Weight	Approx. 16.0 lb (Approx. 7.3 kg) * With the Print Head and ink tanks installed.
Print Head/Ink	Total 1472 nozzles (BK 320 nozzles, C/M/Y each 384 nozzles)
ADF capacity	**A4 or Letter size:** max. 20 sheets (20 lb/75 g /m^2 paper), up to 0.08 inch/2 mm in height **Legal size:** max. 5 sheets (20 lb/75 g /m^2 paper), up to 0.02 inch/0.5 mm in height

Copy Specifications

Multiple copy	max. 99 pages
Intensity adjustment	9 positions, Auto intensity (AE copy)
Reduction / Enlargement	25 % - 400 % (1 % unit)

Scan Specifications

Scanner driver	**Windows:** TWAIN 1.9 Specification, WIA
Maximum scanning size	**Platen Glass:** A4/Letter, 8.5" x 11.7"/216 x 297 mm **ADF:** A4/Letter/Legal, 8.5" x 14.0"/216 x 356 mm
Scanning resolution	**Optical resolution (horizontal x vertical) max:** 600 x 1200 dpi * Optical Resolution represents the maximum sampling rate based on ISO 14473.
Gradation (Input / Output)	**Gray:** 16 bit/8 bit **Color:** RGB each 16 bit/8 bit

Fax Specifications

Applicable line	Public Switched Telephone Network (PSTN) IP phone line (IP phone line with quality of no problem at all by using in conversation)
Communication mode	Super G3, G3
Data compressing system	**Black:** MH, MR, MMR **Color:** JPEG
Modem speed	max. 33.6 kbps (Automatic fallback)
Transmission speed	**Black:** Approx. 3 seconds/page at 33.6 kbps (Based on ITU-T No.1 chart for US specifications and Canon FAX Standard chart No.1 for others, both in standard mode.) **Color:** Approx. 1 minute/page at 33.6 kbps (Based on Canon COLOR FAX TEST SHEET.)
Gradation	**Black:** 256 levels **Color:** 24 bit Full Color (RGB each 8 bit)
Density adjustment	3 levels
Memory	**Transmission/reception:** approx. 50 pages (Based on ITU-T No.1 chart for US specifications and Canon FAX Standard chart No.1 for others, both in standard mode.)
Fax resolution	**Black Standard:** 203 pels/inch x 98 lines/inch (8 pels/mm x 3.85 lines/mm) **Black Fine, Photo:** 203 pels/inch x 196 lines/inch (8 pels/mm x 7.70 lines/mm) **Black Extra fine:** 300 x 300 dpi **Color:** 200 x 200 dpi
Dialing	Automatic dialing - Recipient (max. 20 destinations) - Group dial (max. 19 destinations) Regular dialing (with Numeric buttons) Automatic redialing Manual redialing (max. 10 destinations)
Others	Activity report (after every 20 transactions) Sequential broadcasting (max. 21 destinations) Rejected numbers (max. 10 destinations) Err reduction (VoIP) * * For details, see "Err reduction (VoIP)" in "Adv. FAX settings".

Network Specifications

Communication protocol	TCP/IP
Wireless LAN	**Supported Standards:** IEEE802.11n / IEEE802.11g / IEEE802.11b **Frequency bandwidth:** 2.4 GHz **Channel:** 1-11 or 1-13 * Frequency bandwidth and available channels differ depending on country or region. **Communication distance:** Indoors 164 feet/50 m * Effective range varies depending on the installation environment and location. **Security:** WEP (64/128 bits) WPA-PSK (TKIP/AES) WPA2-PSK (TKIP/AES) **Setup:** WPS (Push button configuration/PIN code method) WCN (WCN-NET) Easy wireless connect **Other Features:** Administration password

Minimum System Requirements

Conform to the operating system's requirements when higher than those given here.

Windows

Operating System	Windows 10, Windows 8.1, Windows 7 SP1 Note: Operation can only be guaranteed on a PC with pre-installed Windows 7 or later. .NET Framework 4.5.2 or 4.6 is required.
Hard Disk Space	3.1 GB Note: For bundled software installation. The necessary amount of hard disk space may be changed without notice.
Display	XGA 1024 x 768

macOS

Operating System	OS X 10.10.5 - OS X 10.11, macOS 10.12
Hard Disk Space	1.5 GB Note: For bundled software installation. The necessary amount of hard disk space may be changed without notice.

Display	XGA 1024 x 768

Other Supported OS

iOS, Android, Windows 10 Mobile Some functions may not be available with the supported OS. Refer to the Canon web site for details.

Mobile Printing Capability

Apple AirPrint
Google Cloud Print
PIXMA Cloud Link

- Internet connection or CD-ROM drive is required to install the software for Windows.
- Internet connection is required to use Easy-WebPrint EX and all the user's guide.
- Easy-WebPrint EX: Internet Explorer 8, 9, 10 and 11* (for Windows) is required.
- Windows: Some functions may not be available with Windows Media Center.
- Windows: TWAIN driver (ScanGear) is based on the TWAIN specification V1.9 and requires the Data Source Manager comes with the operating system.
- macOS: For macOS, an internet connection is required during software installation.
- In an in-house network environment, the 5222 port must be released. For confirmation instructions, contact the network administrator.

Information in this guide is subject to change without notice.

Information about Paper

- **Supported Media Types**
  - Paper Load Limit
- **Unsupported Media Types**
- **Handling Paper**
- **Print Area**

Supported Media Types

For best results, choose paper designed for how you are printing. A variety of paper for documents as well as photos or illustrations is available from Canon. Use genuine Canon paper to print important photos, when possible.

Media Types

Genuine Canon paper

Note

- For warnings on use of the non-printable side, see each product's usage information.
- For details on page sizes and media types, access the Canon website.
- Genuine Canon paper is not available in some countries or regions. Note that in the United States, Canon paper is not sold by model number. Instead, purchase paper by name.

Paper for printing documents:

- Canon Red Label Superior <WOP111>
- Canon Océ Office Colour Paper <SAT213>
- High Resolution Paper <HR-101N>*1

Paper for printing photos:

- Glossy Photo Paper "Everyday Use" <GP-501>
- Photo Paper Glossy <GP-701>
- Photo Paper Plus Glossy II <PP-201>
- Photo Paper Plus Glossy II <PP-301>
- Photo Paper Pro Luster <LU-101>
- Photo Paper Plus Semi-gloss <SG-201>
- Matte Photo Paper <MP-101>

Paper other than genuine Canon paper

- Plain Paper (including recycled paper)
- Envelopes*1

*1 Printing to this paper from the operation panel is not supported.

Paper Load Limit

Page Sizes

You can use the following page sizes.

Note

- Page sizes and media types the printer supports differ depending on the OS you are using.

Standard sizes:

- Letter
- Legal

- A4
- B5
- A5
- L(89x127mm)
- KG/4"x6"(10x15)
- 2L/5"x7"(13x18)
- Hagaki
- Hagaki 2
- 8"x10"(20x25cm)
- Square 5"x5" 127x127mm
- Envelope Com 10
- Envelope DL
- Nagagata 3
- Nagagata 4
- Yougata 4
- Yougata 6

Special sizes:

Special page sizes must be within the following limits:

- Minimum size: 2.17 x 3.51 inches (55.0 x 89.0 mm)
- Maximum size: 8.50 x 26.61 inches (215.9 x 676.0 mm)

Paper Weight

You can use paper in the following weight range.

- 17 to 28 lb (64 to 105 g /m^2) (plain paper other than genuine Canon paper)

Paper Load Limit

Genuine Canon Paper

Paper for printing documents:

Media Name <Model No.>	Rear Tray	Paper Output Tray
Canon Red Label Superior <WOP111>	Approx. 100 sheets	Approx. 50 sheets
Canon Océ Office Colour Paper <SAT213>	Approx. 80 sheets	Approx. 50 sheets
High Resolution Paper <HR-101N>*1	Approx. 80 sheets	Approx. 50 sheets

Paper for printing photos:

Media Name <Model No.>	Rear Tray	Paper Output Tray
Glossy Photo Paper "Everyday Use" <GP-501>*2	A4, Letter: 10 sheets 4" x 6" (10 x 15 cm): 20 sheets	*3
Photo Paper Glossy <GP-701>*2	A4, Letter: 10 sheets 4" x 6" (10 x 15 cm): 20 sheets	*3
Photo Paper Plus Glossy II <PP-201>*2	A4, Letter, 5" x 7" (13 x 18 cm), 8" x 10" (20 x 25 cm): 10 sheets 4" x 6" (10 x 15 cm), Square 5" x 5" (127 x 127 mm): 20 sheets	*3
Photo Paper Plus Glossy II <PP-301>*2	A4, Letter, 5" x 7" (13 x 18 cm), 8" x 10" (20 x 25 cm): 10 sheets 4" x 6" (10 x 15 cm), Square 5" x 5" (127 x 127 mm): 20 sheets	*3
Photo Paper Pro Luster <LU-101>*2	A4, Letter: 10 sheets	*3
Photo Paper Plus Semi-gloss <SG-201>*2	A4, Letter, 5" x 7" (13 x 18 cm), 8" x 10" (20 x 25 cm): 10 sheets 4" x 6" (10 x 15 cm): 20 sheets	*3
Matte Photo Paper <MP-101>	A4, Letter: 10 sheets 4" x 6" (10 x 15 cm): 20 sheets	*3

Paper other than Genuine Canon Paper

Common Name	Rear Tray	Paper Output Tray
Plain Paper (including recycled paper)*1	Approx. 100 sheets (10 sheets: Legal)	Approx. 50 sheets (10 sheets: Legal)

Envelopes	10 envelopes	*3

*1 Normal feeding at maximum capacity may not be possible with some types of paper, or under very high or low temperature or humidity. In this case, load half the amount of paper or less.
*2 Feeding from a loaded stack of paper may leave marks on the printed side or prevent efficient feeding. In this case, load one sheet at a time.
*3 For best results in continuous printing, remove printed paper from the paper output tray to avoid smearing or discoloration.

Unsupported Media Types

Do not use the following types of paper. Using such paper will cause not only unsatisfactory results, but also the printer to jam or malfunction.

- Folded, curled, or wrinkled paper
- Damp paper
- Paper that is too thin (weighing less than 17 lb (64 g /m^2))
- Paper that is too thick (plain paper weighing more than 28 lb (105 g /m^2), except for Canon genuine paper)
- Paper thinner than a postcard, including plain paper or notepad paper cut to a small size (when printing on paper smaller than A5)
- Picture postcards
- Postcards
- Envelopes with a double flap
- Envelopes with an embossed or treated surface
- Envelopes whose gummed flaps are already moistened and adhesive
- Any type of paper with holes
- Paper that is not rectangular
- Paper bound with staples or glue
- Paper with an adhesive surface on the back such as label seal
- Paper decorated with glitter, etc.

Handling Paper

- Be careful not to rub or scratch the surfaces of any types of paper when handling.
- Hold the paper as closely as possible to its edges and try not to touch the printing surface. The print quality may be degraded if the printing surface is smudged with sweat or oil that comes from your hands.
- Do not touch the printed surface until the ink is dried. Even when the ink is dried, be careful not to touch the printed surface as much as possible when handling. Due to the nature of the pigment ink, the ink on the printed surface may be removed when being rubbed or scratched.
- Take out only the necessary number of paper from the package, just before printing.
- To avoid curling, when you do not print, put unused paper back into the package and keep it on a level surface. And also, store it avoiding heat, humidity, and direct sunlight.

Printing

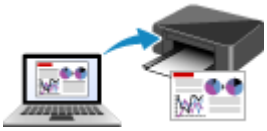

Printing from Computer

Printing from Smartphone/Tablet

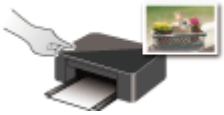

Printing Using Operation Panel

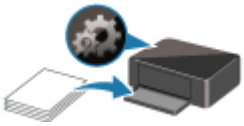

Paper Settings

Printing from Computer

- Printing from Application Software (Windows Printer Driver)
- Printing from Application Software (AirPrint)
- Printing Using Canon Application Software
- Printing Using a Web Service

Printing from Application Software (Windows Printer Driver)

- Basic Printing Setup Basic
- Various Printing Methods
- Changing the Print Quality and Correcting Image Data
- Overview of the Printer Driver
- Printer Driver Description
- Updating the MP Drivers

Basic Printing Setup

This section describes settings on the **Quick Setup** tab used for basic printing.

Basic Printing Setup

1. Check that printer power is on

2. Load paper in printer

3. Open printer driver's setup screen

4. Select frequently used settings

   On the **Quick Setup** tab, use **Commonly Used Settings** to select from predefined print settings. When you select a print setting, the settings for **Additional Features**, **Media Type**, and **Printer Paper Size** automatically switch to the predefined values.

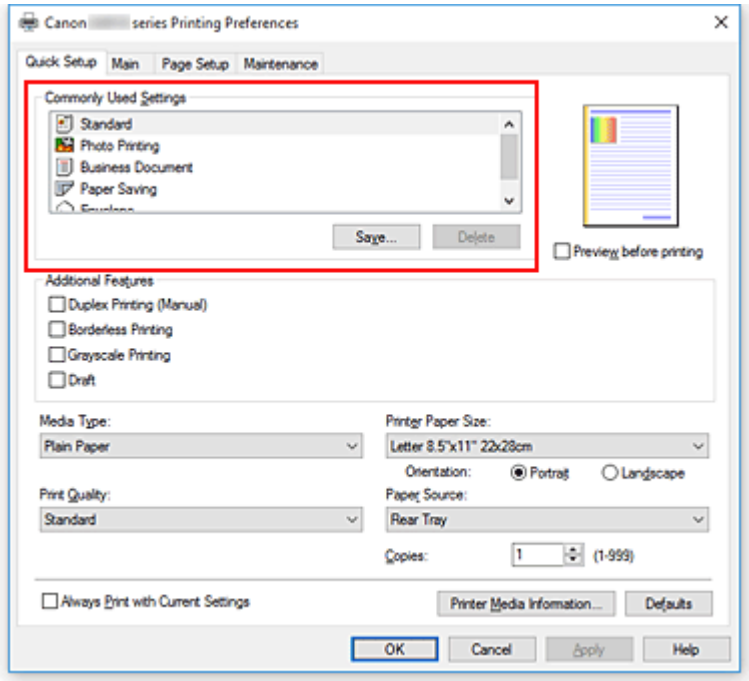

5. Select print quality

   For **Print Quality**, select from **High**, **Standard**, or **Draft**.

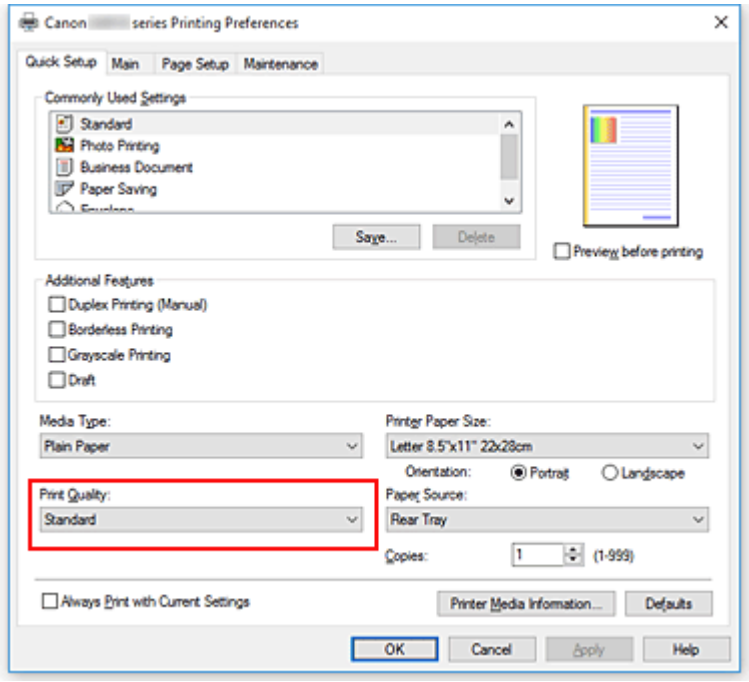

Important

- The print quality selections will differ depending on which print setting you select.

6. Click **OK**

The printer will now print using these settings.

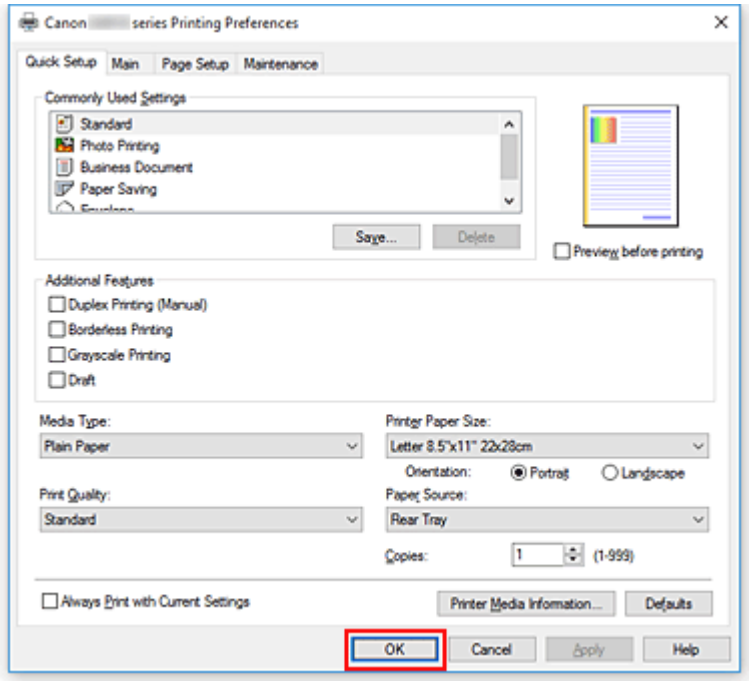

Important

- When you select **Always Print with Current Settings**, the settings on the **Quick Setup**, **Main**, and **Page Setup** tabs are saved, and those settings are used in subsequent printings.
- To register the current settings as a new preset, click **Save...** under **Commonly Used Settings**.

Note

- If the paper settings in the printer driver differ from the paper information registered on the printer, an error may occur. For instructions on what to do if an error occurs, see "Paper Settings."
  To check the current printer settings or to apply the printer settings to the printer driver, display the **Quick Setup** tab, click **Printer Media Information...**, and specify the settings in the dialog box that appears.
  For details about the paper information to be registered on the printer, see the following:
  - Paper Settings on the Printer Driver and the Printer (Media Type)
  - Paper Settings on the Printer Driver and the Printer (Paper Size)

Checking Printer Settings and Applying Settings to Printer Driver

1. Open printer driver setup window

2. On **Quick Setup** tab, click **Printer Media Information...**
   The **Printer Media Information** dialog box appears.

3. Select **Paper Source**

   From **Paper Source**, check the setting or select a new paper source.
   The current printer settings appear in **Media Type** and **Page Size**.

4. Apply settings

   To apply the printer settings to the printer driver, click **Set**.

   Note

   - If the Type on the printer is set to Ink Jet Hagaki, Hagaki K, or Hagaki, or if the Page size on the printer is set to 2L/5"x7"(13x18), click **Set** to display the dialog box.
     Select the media type and paper size that match your purpose, and then click **OK**.
   - If the Type and the Page size on the printer are not set or are set to Others, **Set** will be grayed out and cannot be clicked.
   - If communication with the printer is disabled, the **Printer Media Information...** dialog box will not appear or the printer driver will not be able to obtain printer media information.

Paper Settings on the Printer Driver and the Printer (Media Type)

When you use this printer, selecting a media type and paper size that matches the print purpose will help you achieve the best print results.
You can use the following media types on this printer.

Canon genuine papers (Document Printing)

Media name <Model No.>	Media Type in the printer driver	Paper information registered on the printer
Canon Red Label Superior <WOP111>	**Plain Paper**	Plain paper
Canon Océ Office Colour Paper <SAT213>	**Plain Paper**	Plain paper

Canon genuine papers (Photo Printing)

Media name <Model No.>	Media Type in the printer driver	Paper information registered on the printer
Photo Paper Plus Glossy II <PP-201/PP-301>	**Photo Paper Plus Glossy II**	PlusGlossyII
Photo Paper Pro Luster <LU-101>	**Photo Paper Pro Luster**	Pro Luster
Photo Paper Plus Semi-gloss <SG-201>	**Photo Paper Plus Semi-gloss**	Semi-gloss
Glossy Photo Paper "Everyday Use" <GP-501>	**Glossy Photo Paper**	Glossy
Photo Paper Glossy <GP-701>	**Glossy Photo Paper**	Glossy
Matte Photo Paper <MP-101>	**Matte Photo Paper**	Matte

Canon genuine papers (Business Letter Printing)

Media name <Model No.>	Media Type in the printer driver	Paper information registered on the printer
High Resolution Paper <HR-101N>	**High Resolution Paper**	High Res

Commercially available papers

Media name	Media Type in the printer driver	Paper information registered on the printer
Plain Paper (including recycled paper)	**Plain Paper**	Plain paper
Envelopes	**Envelope**	Envelope

Paper Settings on the Printer Driver and the Printer (Paper Size)

When you use this printer, selecting a paper size that matches the print purpose will help you achieve the best print results.
You can use the following paper sizes on this printer.

Printer Paper Size in the printer driver	Cassette paper information registered on the printer
Letter 8.5"x11" 22x28cm	Letter
Legal 8.5"x14" 22x36cm	Legal
A5	A5
A4	A4
B5	B5
4"x6" 10x15cm	KG/4"x6"
5"x7" 13x18cm	2L/5"x7"
8"x10" 20x25cm	8"x10"
L 89x127mm	L
2L 127x178mm	2L/5"x7"
Square 5"x5" 13x13cm	Square 5"
Hagaki 100x148mm	Hagaki
Hagaki 2 200x148mm	Hagaki 2
Envelope Com 10	Env. Com 10
Envelope DL	Envelope DL
Nagagata 3 4.72"x9.25"	Nagagata 3
Nagagata 4 3.54"x8.07"	Nagagata 4
Yougata 4 4.13"x9.25"	Yougata 4
Yougata 6 3.86"x7.48"	Yougata 6
Card 2.17"x3.58" 55x91mm	Card 2"x3.5"
Custom Size	Others

Various Printing Methods

- Setting a Page Size and Orientation
- Setting the Number of Copies and Printing Order
- Execute Borderless Printing
- Scaled Printing
- Page Layout Printing
- Tiling/Poster Printing
- Duplex Printing
- Setting Up Envelope Printing
- Printing on Postcards

Setting a Page Size and Orientation

The paper size and orientation are essentially determined by the application software. When the page size and orientation set for **Page Size** and **Orientation** on the **Page Setup** tab are same as those set with the application software, you do not need to select them on the **Page Setup** tab.

When you are not able to specify them with the application software, the procedure for selecting a page size and orientation is as follows:
You can also set page size and orientation on the **Quick Setup** tab.

1. Open the printer driver setup window

2. Select the paper size

   Select a page size from the **Page Size** list on the **Page Setup** tab.

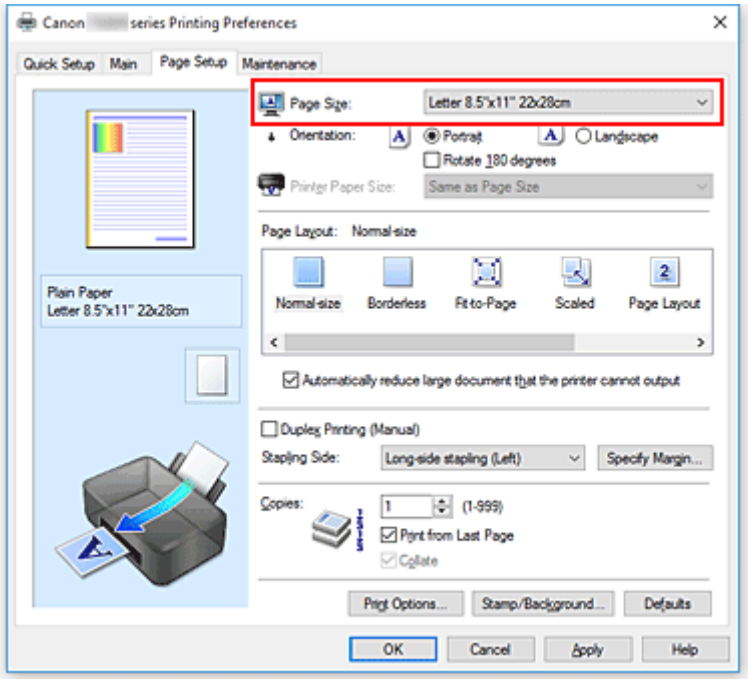

3. Set **Orientation**

   Select **Portrait** or **Landscape** for **Orientation**. Check **Rotate 180 degrees** check box when you want to perform printing with the original being rotated 180 degrees.

4. Click **OK**

   When you execute print, the document will be printed with the selected page size and the orientation.

Note

- If **Normal-size** is selected for **Page Layout**, then **Automatically reduce large document that the printer cannot output** is displayed.
  Normally, you can leave the check box checked. During printing, if you do not want to reduce large documents that cannot be printed on the printer, uncheck the check box.

Setting the Number of Copies and Printing Order

You can also set the number of copies on the **Quick Setup** tab.

1. Open the printer driver setup window

2. Specify the number of copies to be printed

   For **Copies** on the **Page Setup** tab, specify the number of copies to be printed.

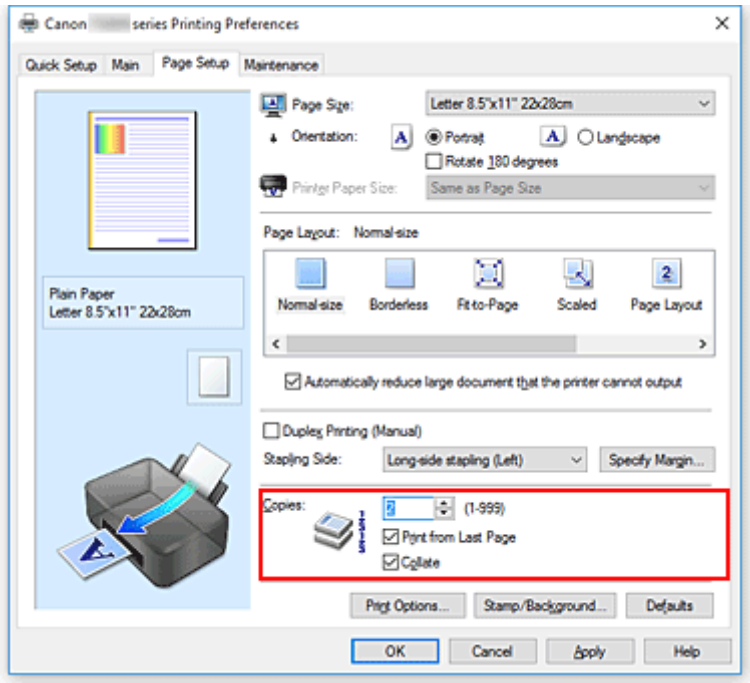

3. Specify the print order

   Check the **Print from Last Page** check box when you want to print from the last page in order, and uncheck the check box when you want to print from the first page.
   Check the **Collate** check box when you are printing multiple copies of a document and want to print out all pages in each copy together. Uncheck this check box when you want to print all pages with the same page number together.

   - **Print from Last Page**: ☑ /**Collate**: ☑

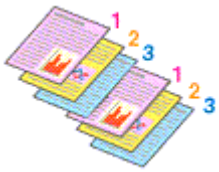

   - **Print from Last Page**: ☐ /**Collate**: ☑

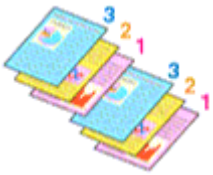

- **Print from Last Page**: ☑ /**Collate**: ☐

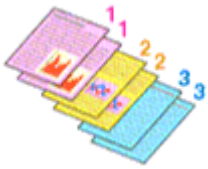

- **Print from Last Page**: ☐ /**Collate**: ☐

4. Click **OK**

   When you execute print, the specified number of copies will be printed with the specified printing order.

Important

- When the application software that you used to create the document has the same function, specify the settings on the printer driver. However, if the print results are not acceptable, specify the function settings on the application software. When you specify the number of copies and the printing order with both the application software and this printer driver, the number of copies may be multiplied numbers of the two settings or the specified printing order may not be enabled.
- **Print from Last Page** appears grayed out and is unavailable when **Tiling/Poster** is selected for **Page Layout**.
- When **Booklet** is selected for **Page Layout**, **Print from Last Page** and **Collate** appear grayed out and cannot be set.
- When **Duplex Printing (Manual)** is selected, **Print from Last Page** appears grayed out and cannot be set.

Note

- By setting both **Print from Last Page** and **Collate**, you can perform printing so that papers are collated one by one starting from the last page.
  These settings can be used in combination with **Normal-size**, **Borderless**, **Fit-to-Page**, **Scaled**, and **Page Layout**.

Execute Borderless Printing

The borderless printing function allows you to print data without any margin by enlarging the data so that it extends slightly off the paper. In standard printing, margins are created around the document area. However, in borderless printing function, these margins are not created. When you want to print data such as a photo without providing any margin around it, set borderless printing.

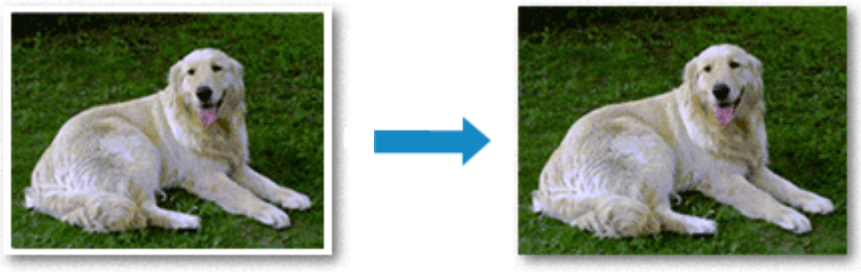

You can also set borderless printing in **Additional Features** on the **Quick Setup** tab.

Setting Borderless Printing

1. Open the printer driver setup window

2. Set borderless printing

   Select **Borderless** from the **Page Layout** list on the **Page Setup** tab.

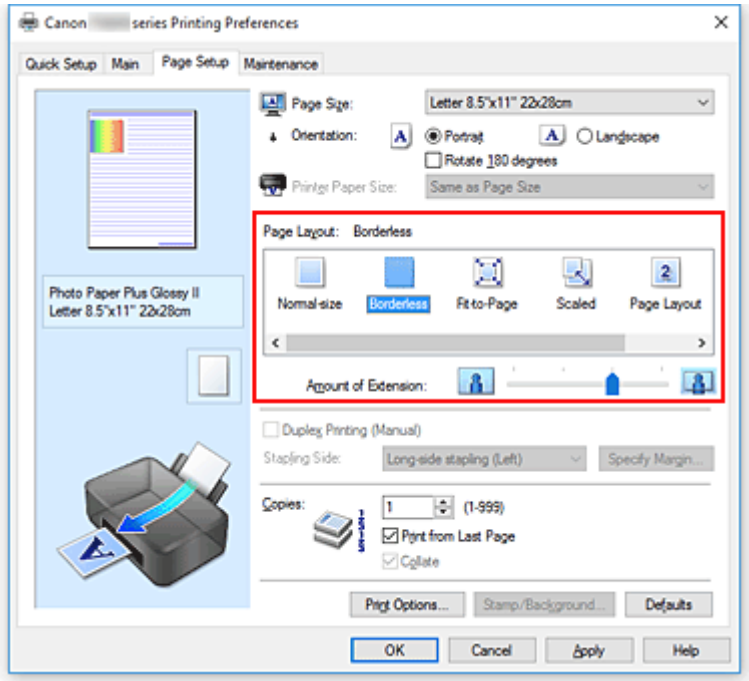

   Click **OK** when the confirmation message appears.
   When a message prompting you to change the media type appears, select a media type from the list and click **OK**.

3. Check the paper size

Check the **Page Size** list. When you want to change it, select another page size from the list. The list displays only sizes that can be used for borderless printing.

4. Adjust the amount of extension from the paper

   If necessary, adjust the amount of extension using the **Amount of Extension** slider.
   Moving the slider to the right increases the amount extending off the paper, and moving the slider to the left decreases the amount.
   It is recommended to set the slider at the second position from the right for most cases.

Important

- When the **Amount of Extension** slider is set to the rightmost position, the back side of the paper may become smudged.

5. Click **OK**

   When you execute print, the data is printed without any margins on the paper.

Important

- When a page size that cannot be used for borderless printing is selected, the size is automatically changed to the valid page sizes for borderless printing.
- When **Borderless** is selected, the **Printer Paper Size**, **Duplex Printing (Manual)**, **Stapling Side** settings, and the **Stamp/Background...** button on the **Page Setup** tab appear grayed out and are unavailable.
- When **Envelope** or **High Resolution Paper** is selected from the **Media Type** list on the **Main** tab, you cannot perform borderless printing.
- Depending on the type of the media used during borderless printing, the print quality may deteriorate at the top and bottom of the sheet or stains may form.
- When the ratio of the height to the width differs from the image data, a portion of the image may not be printed depending on the size of the media used.
  In this case, crop the image data with an application software according to the paper size.

Note

- When **Plain Paper** is selected for **Media Type** on the **Main** tab, borderless printing is not recommended. Therefore, the message for media selection appears.
  When you are using plain paper for test printing, select **Plain Paper**, and click **OK**.

Expanding the Range of the Document to Print

Setting a large amount of extension allows you to perform borderless printing with no problems. However, the portion of the document extending off the paper range will not be printed and for this reason, the subjects around the perimeter of a photo may not be printed.

When you are not satisfied with the result of borderless printing, reduce the amount of extension. The extension amount decreases as the **Amount of Extension** slider is moved to the left.

Important

- When the amount of extension is decreased, an unexpected margin may be produced on the print, depending on the size of the paper.

Note

- When the **Amount of Extension** slider is set to the leftmost position, image data will be printed in the full size. If you set this when printing the address side of a postcard, the postal code of the sender is printed in the correct position.
- When **Preview before printing** is checked on the **Main** tab, you can confirm whether there will be no margin before printing.

Scaled Printing

1. Open the printer driver setup window

2. Set scaled printing

   Select **Scaled** from the **Page Layout** list on the **Page Setup** tab.

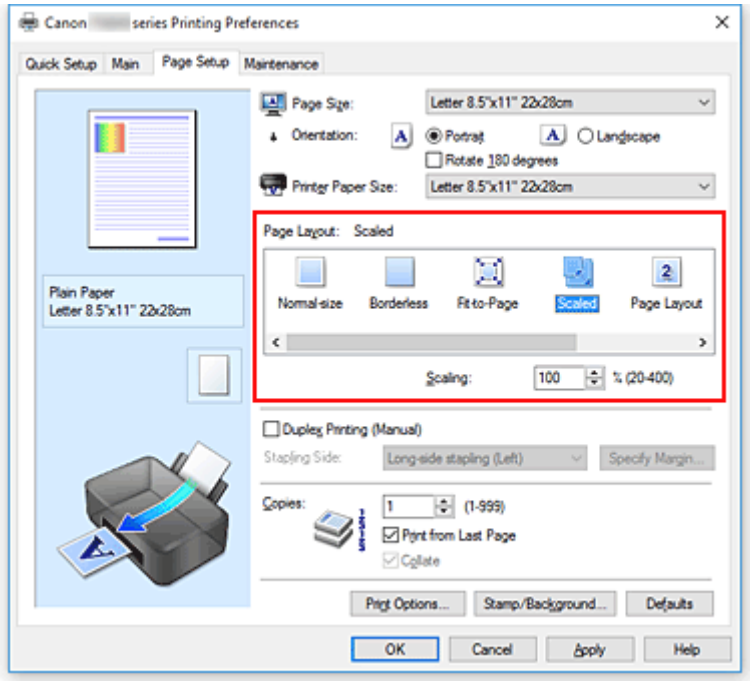

3. Select the paper size of the document

   Using **Page Size**, select the page size that is set with your application software.

4. Set the scaling rate by using one of the following methods:

   - Select a **Printer Paper Size**

     When the printer paper size is smaller than the **Page Size**, the page image will be reduced. When the printer paper size is larger than the **Page Size**, the page image will be enlarged.

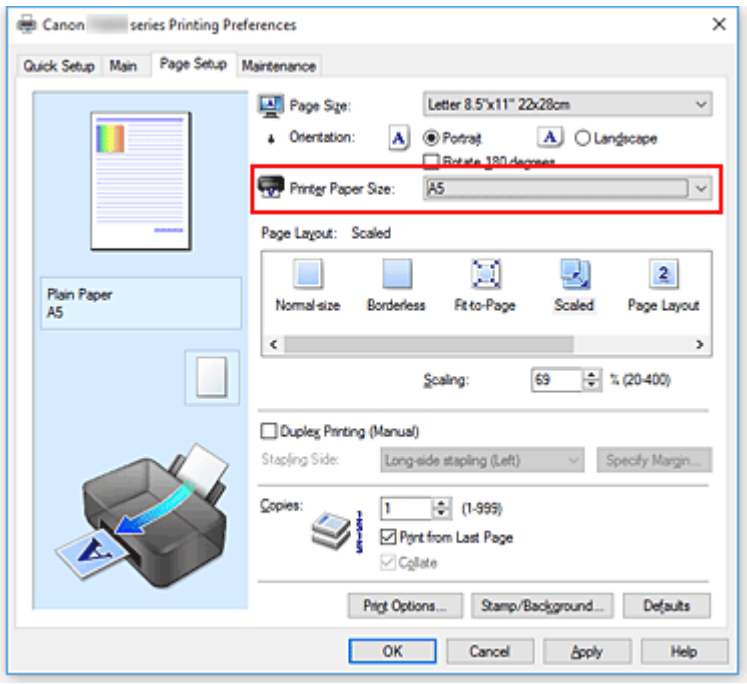

- Specify a scaling factor

  Directly type in a value into the **Scaling** box.

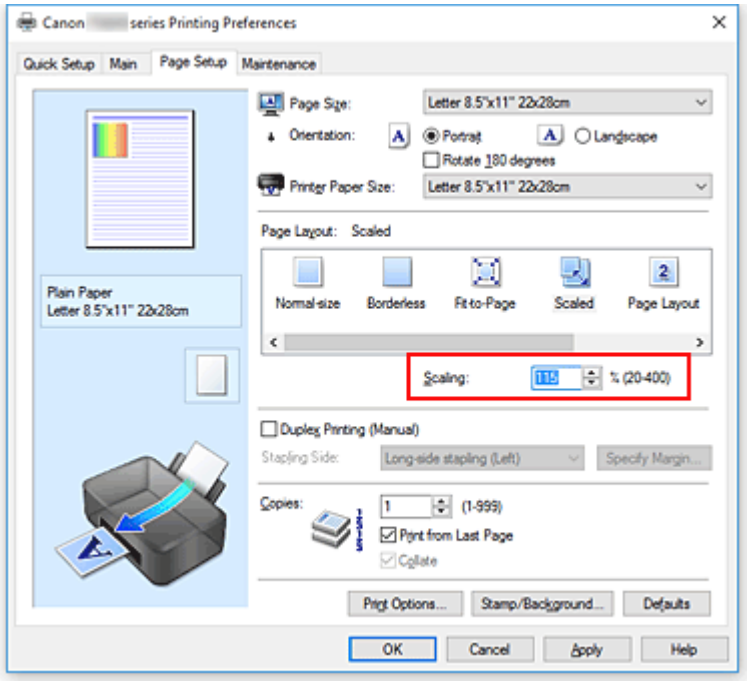

  The current settings are displayed in the settings preview on the left side of the printer driver.

5. Click **OK**

   When you execute print, the document will be printed with the specified scale.

Important

- When the application software which you used to create the original has the scaled printing function, configure the settings on your application software. You do not need to configure the same setting in the printer driver.

Note

- Selecting **Scaled** changes the printable area of the document.

Page Layout Printing

The page layout printing function allows you to print more than one page image on a single sheet of paper.

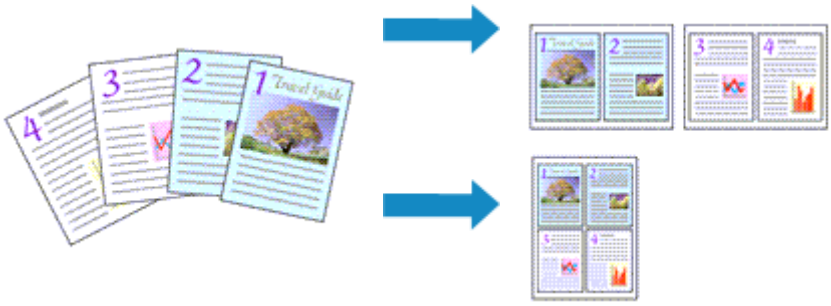

1. Open the printer driver setup window

2. Set page layout printing

   Select **Page Layout** from the **Page Layout** list on the **Page Setup** tab.
   The current settings are displayed in the settings preview on the left side of the printer driver.

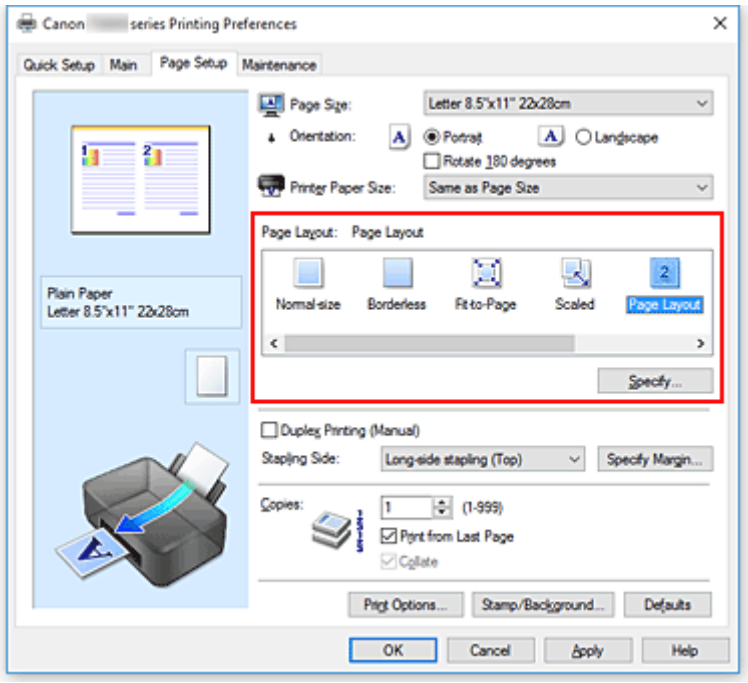

3. Select the print paper size

   Select the size of the paper loaded in the printer from the **Printer Paper Size** list.

4. Set the number of pages to be printed on one sheet and the page order

   If necessary, click **Specify...**, specify the following settings in the **Page Layout Printing** dialog box, and click **OK**.

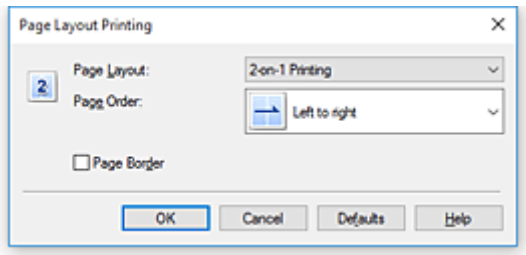

Page Layout

To change the number of pages to be printed on a single sheet of paper, select the number of pages from the list.

Page Order

To change the page arrangement order, select a placement method from the list.

Page Border

To print a page border around each document page, check this check box.

5. Complete the setup

Click **OK** on the **Page Setup** tab.
When you execute print, the specified number of pages will be arranged on each sheet of paper in the specified order.

Tiling/Poster Printing

The tiling/poster printing function allows you to enlarge image data, divide it into several pages, and print these pages on separate sheets of paper. You can also paste the pages together to create a large print like a poster.

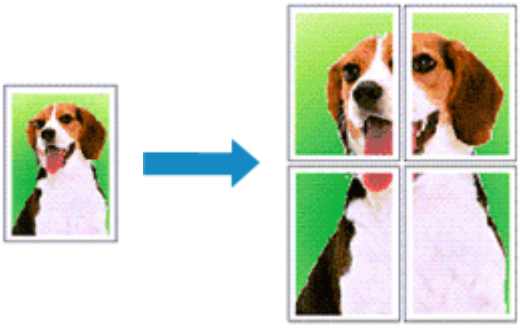

Setting Tiling/Poster Printing

1. Open the printer driver setup window

2. Set tiling/poster printing

   Select **Tiling/Poster** from the **Page Layout** list on the **Page Setup** tab.
   The current settings are displayed in the settings preview on the left side of the printer driver.

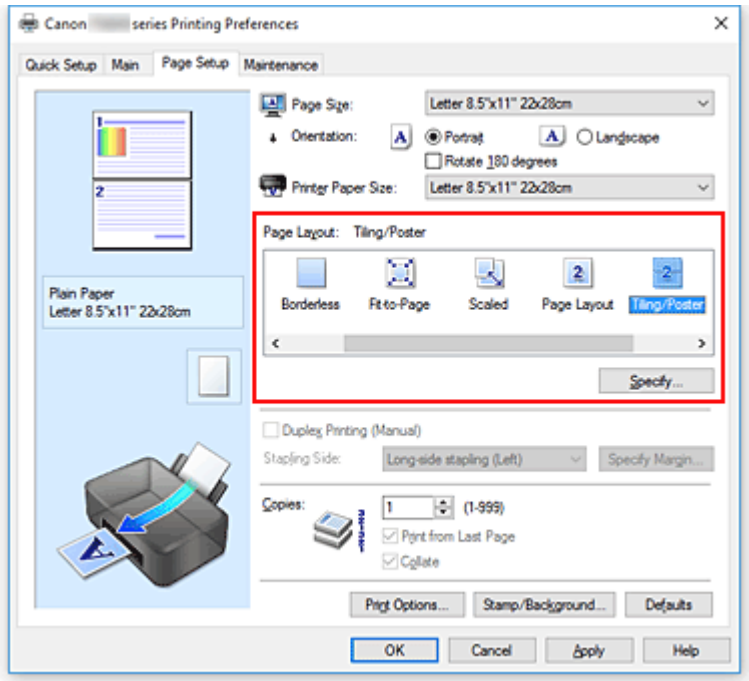

3. Select the print paper size

   Select the size of the paper loaded in the printer from the **Printer Paper Size** list.

4. Set the number of image divisions and the pages to be printed

If necessary, click **Specify...**, specify the following settings in the **Tiling/Poster Printing** dialog box, and then click **OK**.

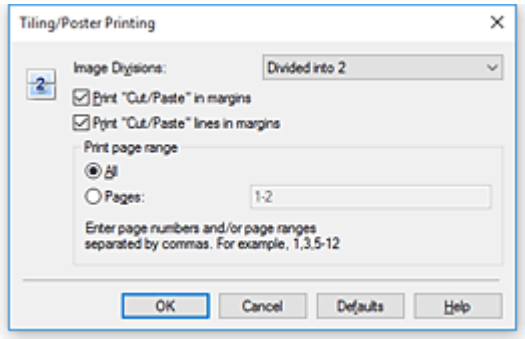

Image Divisions

Select the number of divisions (vertical x horizontal).
As the number of divisions increases, the number of sheets used for printing increases. If you are pasting pages together to create a poster, increasing the number of divisions allows you to create a larger poster.

Print "Cut/Paste" in margins

To leave out words "Cut" and "Paste", uncheck this check box.

Note

- This feature may be unavailable when certain printer drivers or operating environments are used.

Print "Cut/Paste" lines in margins

To leave out cut lines, uncheck this check box.

Print page range

Specifies the printing range. Select **All** under normal circumstances.
To reprint only a specific page, select **Pages** and enter the page number you want to print. To specify multiple pages, enter the page numbers by separating them with commas or by entering a hyphen between the page numbers.

Note

- You can also specify the print range by clicking the pages in the settings preview.

5. Complete the setup

Click **OK** on the **Page Setup** tab.
When you execute print, the document will be divided into several pages during printing.

Printing Only Specific Pages

If ink becomes faint or runs out during printing, you can reprint only the specific pages by following the procedure below:

1. Set the print range

In the settings preview on the left of the **Page Setup** tab, click the pages that do not need to be printed.
The pages that were clicked are deleted, and only the pages to be printed are displayed.

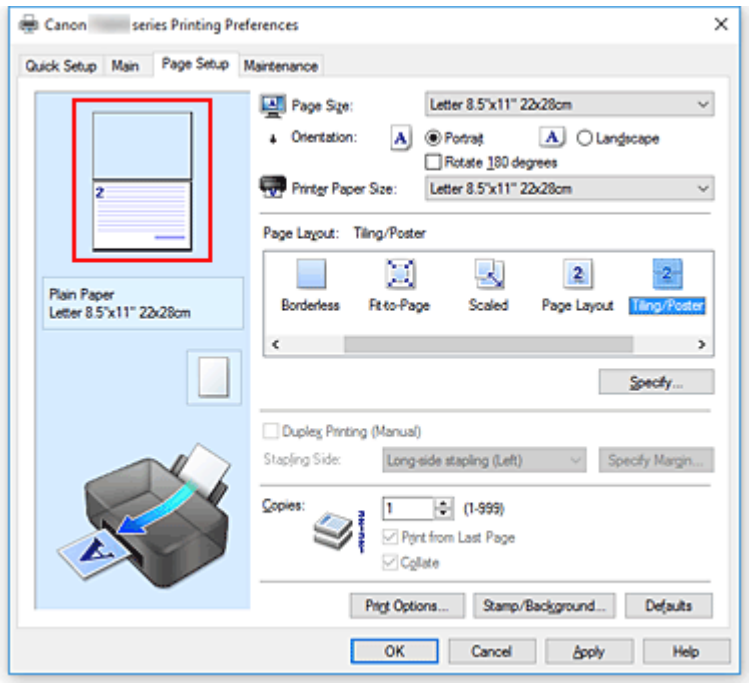

Note

- Click the deleted pages to display them again.
- Right-click the settings preview to select **Print all pages** or **Delete all pages**.

2. Complete the setup

   After completing the page selection, click **OK**.
   When you execute print, only specified pages will be printed.

Important

- Since tiling/poster printing enlarges the document when printing it, the print results may become coarse.

Duplex Printing

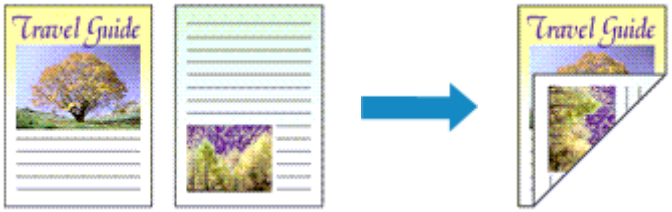

You can also set duplex printing in **Additional Features** on the **Quick Setup** tab.

1. Open the printer driver setup window

2. Set duplex printing

   Check the **Duplex Printing (Manual)** check box on the **Page Setup** tab.

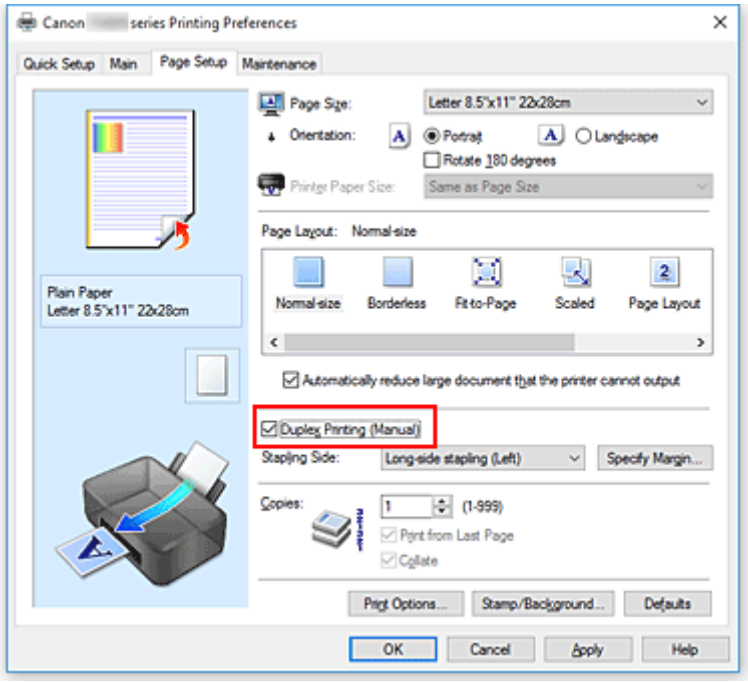

3. Select the layout

   Select **Normal-size**, **Fit-to-Page**, **Scaled**, or **Page Layout** from the **Page Layout** list.

4. Specify the side to be stapled

   The best **Stapling Side** is selected automatically from the **Orientation** and **Page Layout** settings. To change the setting, select another stapling side from the list.

5. Set the margin width

   If necessary, click **Specify Margin...** and set the margin width, and then click **OK**.

6. Complete the setup

   Click **OK** on the **Page Setup** tab.
   When you execute print, the document is first printed on one side of a sheet of paper. After one side is printed, reload the paper correctly according to the message.
   Then click **Start Printing** to print the opposite side.

Important

- When a media type other than **Plain Paper** is selected from **Media Type** on the **Main** tab, **Duplex Printing (Manual)** appears grayed out and is unavailable.
- When **Borderless**, **Tiling/Poster** or **Booklet** is selected from the **Page Layout** list, **Duplex Printing (Manual)** and **Stapling Side** appear grayed out and are unavailable.

Note

- If the back side of the paper becomes smudged during duplex printing, perform **Bottom Plate Cleaning** in the Canon IJ Printer Assistant Tool.

Related Topics

- Cleaning Inside the Printer
- Changing the Printer Operation Mode

Setting Up Envelope Printing

1. Load envelope on the printer

2. Open the printer driver setup window

3. Select the media type

   Select **Envelope** from **Commonly Used Settings** on the **Quick Setup** tab.

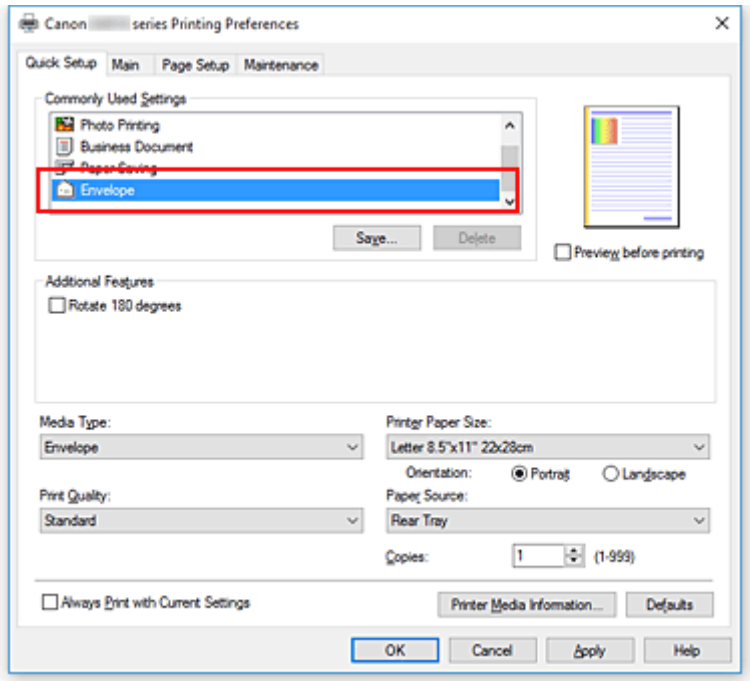

4. Select the paper size

   When the **Envelope Size Setting** dialog box is displayed, select **Envelope Com 10**, **Envelope DL**, **Yougata 4 4.13"x9.25"**, or **Yougata 6 3.86"x7.48"**, and then click **OK**.

5. Set the orientation

   To print the addressee horizontally, select **Landscape** for **Orientation**.

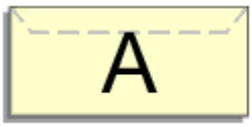

Note

- If **Envelope Com 10**, **Envelope DL**, **Yougata 4 4.13"x9.25"**, or **Yougata 6 3.86"x7.48"** is selected for **Printer Paper Size**, the printer rotates the paper 90 degrees to the left to print, regardless of the **Rotate 90 degrees left when orientation is [Landscape]** setting for **Custom Settings** in the Canon IJ Printer Assistant Tool.

6. Select the print quality

   Select **High** or **Standard** that matches your purpose for **Print Quality**.

7. Click **OK**

   When you execute print, the information is printed on the envelope.

Important

- When you execute envelope printing, guide messages are displayed.
  To hide the guide messages, check the **Do not show this message again** check box.
  To show the guide again, click the **View Printer Status** button on the **Maintenance** tab, and start the Canon IJ Status Monitor.
  Then click **Envelope Printing** from **Display Guide Message** of the **Option** menu to enable the setting.

Note

- If the paper settings in the printer driver differ from the paper information registered on the printer, an error may occur. For instructions on what to do if an error occurs, see "Paper Settings."
  To check the current printer settings or to apply the printer settings to the printer driver, click **Printer Media Information...** from the **Quick Setup** tab, and specify the settings in the dialog box that appears.
  For details about the paper information to be registered on the printer, see the following:
  - Paper Settings on the Printer Driver and the Printer (Media Type)
  - Paper Settings on the Printer Driver and the Printer (Paper Size)

Printing on Postcards

1. Load postcard on the printer

2. Open the printer driver setup window

3. Select commonly used settings

   Display the **Quick Setup** tab, and for **Commonly Used Settings**, select **Standard**.

4. Select the media type

   For **Media Type**, select **Ink Jet Hagaki (A)**, **Ink Jet Hagaki**, **Hagaki K (A)**, **Hagaki K**, **Hagaki (A)**, or **Hagaki**.

   Important

   - This printer cannot print on postcards that have photos or stickers attached.
   - When printing on each side of a postcard separately, you will get cleaner printing if you print the message side first and then print the address side.
   - The paper settings on the printer driver are different, depending on whether you are printing on the address side or the message side.
     To check the current printer settings or to apply the printer settings to the printer driver, click **Printer Media Information...** from the **Quick Setup** tab, and specify the settings in the dialog box that appears.
     For details about the paper information to be registered to the printer driver and on the printer, see the following:
     - Paper Settings on the Printer Driver and the Printer (Media Type)
     - Paper Settings on the Printer Driver and the Printer (Paper Size)

5. Select the paper size

   For **Printer Paper Size**, select **Hagaki 100x148mm** or **Hagaki 2 200x148mm**.

   Important

   - Return postcards can be used only when you print them from the computer.
   - When printing a return postcard, always set the paper size to **Hagaki 2 200x148mm** from your application software or the printer driver.
   - Do not fold the return postcard. If a crease is formed, the printer will not be able to feed the postcard properly, and this condition will cause line shifts or a paper jam.
   - With return postcards, borderless printing cannot be used.

6. Set the print orientation

   To print the address horizontally, set **Orientation** to **Landscape**.

7. Select the print quality

   For **Print Quality**, select **High** or **Standard**, according to your purpose.

8. Click **OK**

When you execute printing, the data will be printed onto the postcard.

Important

- When you execute postcard printing, a guide message is displayed.
  When the guide message is displayed, select **Do not show this message again** if you do not want any guide messages to be displayed.
  To display guide messages again, open the **Maintenance** tab and click **View Printer Status** to start the Canon IJ Status Monitor.
  On the **Option** menu, choose **Display Guide Message** and click **Hagaki Printing** to enable the setting.
- When printing on media other than postcards, load the media according to usage method of that media, and click **Start Printing**.

Overview of the Printer Driver

- **Canon IJ Printer Driver**
  - Opening Printer Driver's Setup Screen
- **Canon IJ Status Monitor**
- **Instructions for Use (Printer Driver)**

Canon IJ Printer Driver

The Canon IJ printer driver (simply called printer driver below) is software that you install onto your computer so that it can communicate with the printer.

The printer driver converts the print data created by your application software into data that your printer can understand, and sends the converted data to the printer.

Because different printers support different data formats, you need a printer driver that supports your printer.

Installing the Printer Driver

To install the printer driver, install the driver from **Start Setup Again** on the setup CD-ROM that came with your printer.

Specifying the Printer Driver

To specify the printer driver, open the **Print** dialog box of the application software you are using, and select "Canon XXX" (where "XXX" is your model name).

Displaying the Manual from the Printer Driver

To display the description of a setup tab from the printer driver's setup screen, click **Help** on that tab.

Related Topic

- Opening Printer Driver's Setup Screen

Opening Printer Driver's Setup Screen

You can display the printer driver's setup screen from your application software or by clicking the printer icon.

Displaying the Printer Driver's Setup Screen from Your Application Software

Perform this procedure to set up the print settings during printing.

1. Select print command from application software

   The **Print** command can generally be found in the **File** menu.

2. Select your printer model, and click **Preferences** (or **Properties**)

   The printer driver's setup screen appears.

   Note

   - Depending on the application software you are using, the command and menu names, and the number of steps may vary. For details, refer to the operating instructions of your application software.

Displaying the Printer Driver's Setup Screen by Clicking the Printer Icon

From the setup screen you can perform printer maintenance operations such as print head cleaning, or set print settings to be shared by all application software.

1. Select **Control Panel** -> **Hardware and Sound** -> **Devices and Printers**

2. Right-click the icon of your model. When the menu appears, select **Printing preferences**

   The printer driver's setup screen appears.

   Important

   - Opening the printer driver setup window through **Printer properties** displays such tabs regarding the Windows functions as the **Ports** (or **Advanced**) tab. Those tabs do not appear when opening through **Printing preferences** or application software. For tabs regarding Windows functions, refer to the user's manual for the Windows.

Canon IJ Status Monitor

The Canon IJ Status Monitor is an application software that shows the status of the printer and the progress of printing. You will know the status of the printer with graphics, icons, and messages.

Launching the Canon IJ Status Monitor

The Canon IJ Status Monitor launches automatically when print data is sent to the printer. When launched, the Canon IJ Status Monitor appears as a button on the task bar.

Click the button of the status monitor displayed on the task bar. The Canon IJ Status Monitor appears.

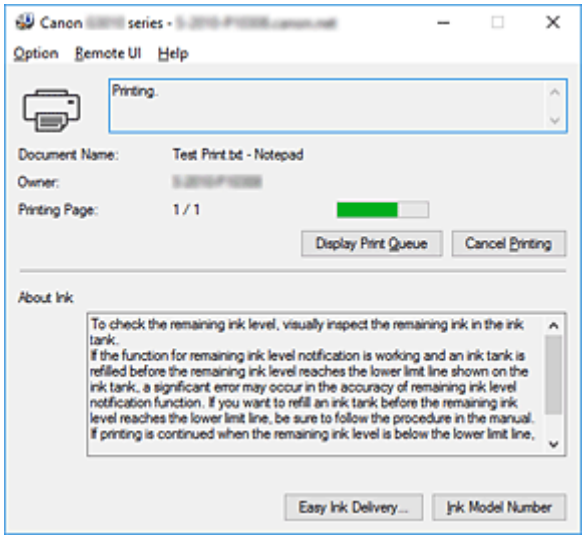

Note

- To open the Canon IJ Status Monitor when the printer is not printing, open the printer driver setup window and click **View Printer Status** on the **Maintenance** tab.
- The information displayed on the Canon IJ Status Monitor may differ depending on the country or region where you are using your printer.

When Errors Occur

The Canon IJ Status Monitor is automatically displayed if an error occurs (e.g., if the printer runs out of paper or if the ink is low).

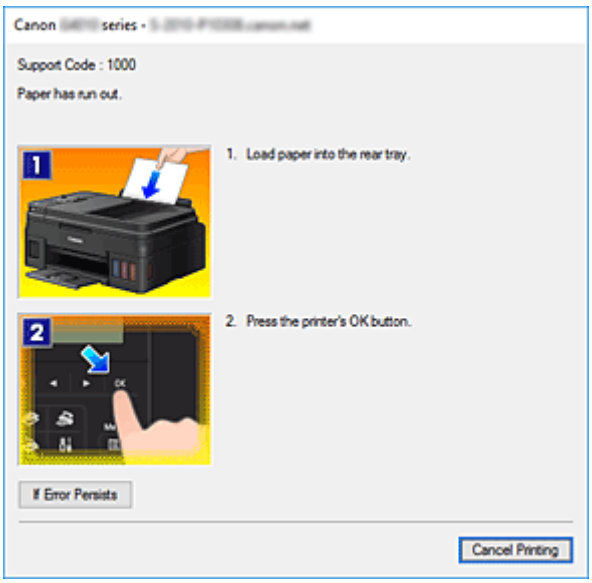

In such cases, take the appropriate action as described.

Instructions for Use (Printer Driver)

This printer driver is subject to the following restrictions. Keep the following points in mind when using the printer driver.

Restrictions on the Printer Driver

- With some applications, the **Copies** setting in the **Page Setup** tab of the printer driver may not be enabled.
  In this case, use the copies setting in the **Print** dialog box of the application software.
- If the selected **Language** in the **About** dialog box of the **Maintenance** tab does not match the operating system interface language, the printer driver setup window may not be displayed properly.
- Do not change the **Advanced** tab items of the printer properties. If you change any of the items, you will not be able to use the following functions correctly.
  Also, if **Print to file** is selected in the **Print** dialog box of the application software and with applications that prohibit EMF spooling, such as Adobe Photoshop LE and MS Photo Editor, the following functions will not operate.
  - **Preview before printing** on the **Main** tab
  - **Prevention of Print Data Loss** in the **Print Options** dialog box on the **Page Setup** tab
  - **Page Layout**, **Tiling/Poster**, **Booklet**, **Duplex Printing (Manual)**, **Specify Margin...**, **Print from Last Page**, **Collate**, and **Stamp/Background...** on the **Page Setup** tab
  - **Print a pattern for color adjustment** on the **Color Adjustment** tab in the **Manual Color Adjustment** dialog box
- Since the resolution in the preview display differs from the printing resolution, text and lines in the preview display may appear different from the actual print result.
- With some applications, the printing is divided into multiple print jobs.
  To cancel printing, delete all divided print jobs.
- If image data is not printed correctly, display the **Print Options** dialog box from the **Page Setup** tab and change the setting of **Disable ICM required from the application software**. This may solve the problem.

Points to Note About Applications with Restrictions

- There are following restrictions in Microsoft Word (Microsoft Corporation).
  - When Microsoft Word has the same printing functions as the printer driver, use Word to specify them.
  - When **Fit-to-Page**, **Scaled**, or **Page Layout** is used for **Page Layout** on the **Page Setup** tab of the printer driver, the document may not print normally in certain versions of Word.
  - When **Page Size** in Word is set to "XXX Enlarge/Reduce", the document may not print normally in certain versions of Word.
    If this happens, follow the procedure below.
    1. Open Word's **Print** dialog box.
    2. Open the printer driver setup window, and on the **Page Setup** tab, set **Page Size** to the same paper size that you specified in Word.
    3. Set the **Page Layout** that you want, and then click **OK** to close the window.
    4. Without starting printing, close the **Print** dialog box.
    5. Open Word's **Print** dialog box again.
    6. Open the printer driver setup window and click **OK**.

7. Start printing.

- If bitmap printing is enabled in Adobe Illustrator (Adobe Systems Incorporated), printing may take time or some data may not be printed. Print after unchecking the **Bitmap Printing** check box in the **Print** dialog box.

Printer Driver Description

- Quick Setup Tab Description
- Main Tab Description
- Page Setup Tab Description
- Maintenance Tab Description
- Canon IJ Status Monitor Description

Quick Setup Tab Description

The **Quick Setup** tab is for registering commonly used print settings. When you select a registered setting, the printer automatically switches to the preset items.

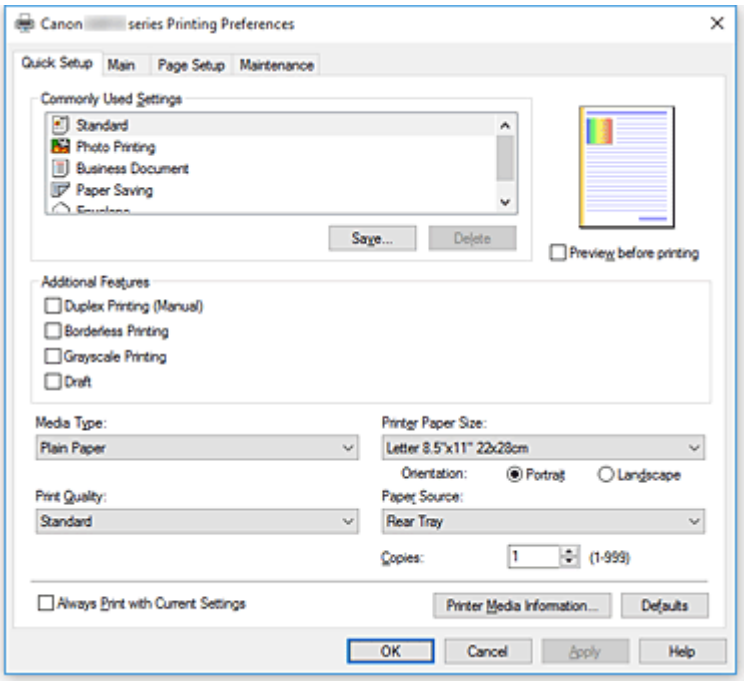

Commonly Used Settings

The names and icons of frequently used printing profiles are registered. When you select a printing profile according to the purpose of the document, settings that match the purpose are applied.
In addition, functions that are thought to be useful for the selected printing profile are displayed in **Additional Features**.
You can also change a printing profile and register it under a new name. You can delete the registered printing profile.
You can rearrange the profiles either by dragging the individual profiles or by holding down the Ctrl key and pressing the up or down arrow keys.

Standard

These are the factory settings.
If **Page Size**, **Orientation**, and **Copies** were set from the application software, those settings have priority.

Photo Printing

If you select this setting when printing a photo, the photo paper and photo size generally used are set. The **Borderless Printing** check box is checked automatically.
If **Orientation** and **Copies** were set from the application software, those settings have priority.

Business Document

Select this setting when printing a general document.
If **Page Size**, **Orientation**, and **Copies** were set from the application software, those settings have priority.

Paper Saving

Select this setting to save paper when printing a general document. The **2-on-1 Printing** and **Duplex Printing (Manual)** check boxes are checked automatically.

If **Page Size**, **Orientation**, and **Copies** were set from the application software, those settings have priority.

Envelope

If you select this setting for printing an envelope, **Media Type** is set automatically to **Envelope**. In the **Envelope Size Setting** dialog box, select the size of the envelope to be used.

Note

- The combination of the **Additional Features** that was displayed for the printing profile that had been selected when the added printing profile was saved is also displayed when that added printing profile is selected.

Save...

Displays the **Save Commonly Used Settings** dialog box.

Click this button when you want to save the information that you set on the **Quick Setup**, **Main**, and **Page Setup** tabs to **Commonly Used Settings**.

Delete

Deletes a registered printing profile.

Select the name of the setting to be deleted from **Commonly Used Settings**, and click **Delete**. When a confirmation message is displayed, click **OK** to delete the specified printing profile.

Note

- Printing profiles that are registered in the initial settings cannot be deleted.

Settings Preview

The paper illustration shows how the original will be laid out on a sheet of paper.

You can check an overall image of the layout.

Preview before printing

Shows what the print result will look like before you actually print the data.

Check this check box to display a preview before printing.

Uncheck this check box if you do not want to display a preview.

Additional Features

Displays the frequently used, convenient functions for the printing profile that you selected for **Commonly Used Settings** on the **Quick Setup** tab.

When you move the mouse pointer near a function that can be changed, a description of that function is displayed.

To enable a function, check the corresponding check box.

For some functions, you can set detailed settings from the **Main** and **Page Setup** tabs.

Important

- Depending on the printing profiles, certain function may be grayed out and you will not be able to change them.

2-on-1 Printing

Prints two pages of the document, side by side, on one sheet of paper.

To change the page sequence, click the **Page Setup** tab, select **Page Layout** for **Page Layout**, and click **Specify...**. Then in the **Page Layout Printing** dialog box that appears, specify the **Page Order**.

4-on-1 Printing

Prints four pages of the document, side by side, on one sheet of paper.

To change the page sequence, click the **Page Setup** tab, select **Page Layout** for **Page Layout**, and click **Specify...**. Then in the **Page Layout Printing** dialog box that appears, specify the **Page Order**.

Duplex Printing (Manual)

Select whether to print the document to both sides of the paper manually or to one side of the paper.

To change the staple side or the margins, set the new values from the **Page Setup** tab.

Borderless Printing

Performs borderless printing without any margins on the paper.

With the borderless printing function, the document to be printed is enlarged, so that it extends slightly off the paper. In other words, the document is printed without any margin.

To adjust the amount that the document extends beyond the paper, click the **Page Setup** tab, choose **Borderless**, and enter the value in **Amount of Extension**.

Grayscale Printing

This function converts the data to monochrome data when printing your document.

Draft

This setting is appropriate for test printing.

Rotate 180 degrees

Prints the document by rotating it 180 degrees against the paper feed direction.

The width of print area and the amount of extension that are configured in other application software will be reversed vertically and horizontally.

Color/Intensity Manual Adjustment

Select when you set the **Color Correction** method and individual settings such as **Cyan**, **Magenta**, **Yellow**, **Brightness**, **Intensity**, and **Contrast**, etc.

Media Type

Selects a type of printing paper.

Select a media type that matches the paper that is loaded in the printer. This ensures that printing is carried out properly for the specified paper.

Printer Paper Size

Selects the size of paper actually loaded into the printer.

Normally, the paper size is set automatically according to the output paper size setting, and the document is printed with no scaling.

When you set **2-on-1 Printing** or **4-on-1 Printing** in **Additional Features**, you can manually set the paper size with **Page Size** on the **Page Setup** tab.

If you select a paper size that is smaller than the **Page Size**, the document size will be reduced. If you select a paper size that is larger, the document size will be enlarged.

Also if you select **Custom...**, the **Custom Paper Size** dialog box opens and allows you to specify any vertical and horizontal dimensions for the paper size.

Orientation

Selects the printing orientation.

If the application used to create your document has a similar function, select the same orientation that you selected in that application.

Portrait

Prints the document so that its top and bottom positions are unchanged relative to the paper feed direction. This is the default setting.

Landscape

Prints the document by rotating it 90 degrees relative to the paper feed direction.

You can change the rotation direction by going to the Canon IJ Printer Assistant Tool, opening the **Custom Settings** dialog box, and then using **Rotate 90 degrees left when orientation is [Landscape]** check box.

To rotate the document 90 degrees to the left when printing, select the **Rotate 90 degrees left when orientation is [Landscape]** check box.

Print Quality

Selects your desired printing quality.

Select one of the following to set the print quality level that is appropriate for the purpose.

To set the print quality level individually, click the **Main** tab, and for **Print Quality**, select **Custom**. The **Set...** becomes enabled. Click **Set...** to open the **Custom** dialog box, and then specify the desired settings.

High

Gives priority to print quality over printing speed.

Standard

Prints with average speed and quality.

Draft

This setting is appropriate for test printing.

Paper Source

Shows the source from which paper is supplied.

Rear Tray

Paper is always supplied from the rear tray.

Copies

Specifies the number of copies you want to print. You can specify a value from 1 to 999.

Important

- When the application software that you used to create the document has the same function, specify the settings on the printer driver. However, if the print results are not acceptable, specify the function settings on the application software.

Always Print with Current Settings

Prints documents with the current settings starting from the next print execution.

When you select this function and then close the printer driver setup window, the information that you set on the **Quick Setup**, **Main**, and **Page Setup** tabs are saved and printing with the same settings is possible starting from the next print execution.

Important

- If you log on with a different user name, the settings that were set when this function was enabled are not reflected in the print settings.
- If a setting was specified on the application software, it has priority.

Printer Media Information...

Displays **Printer Media Information** dialog box.

You can check the printer settings and apply the checked settings to the printer driver.

Defaults

Restores all the settings you have changed to their default values.

Click this button to return all settings on the **Quick Setup**, **Main**, and **Page Setup** tabs to their default values (factory settings).

Save Commonly Used Settings dialog box

This dialog box allows you to save the information that you set on the **Quick Setup**, **Main**, and **Page Setup** tabs and add the information to the **Commonly Used Settings** list on the **Quick Setup** tab.

Name

Enter the name for the printing profile you wish to save.

Up to 255 characters can be entered.

The name appears, with its associated icon, in the **Commonly Used Settings** list on the **Quick Setup** tab.

Options...

Opens the **Save Commonly Used Settings** dialog box.

Changes the details of printing profile to be saved.

Save Commonly Used Settings dialog box

Select the icons of the printing profiles to be registered to **Commonly Used Settings**, and change the items to be saved in the printing profiles.

Icon

Select the icon for the printing profile you wish to save.

The selected icon appears, with its name, in the **Commonly Used Settings** list on the **Quick Setup** tab.

Save the paper size setting

Saves the paper size to the printing profile in **Commonly Used Settings**.

To apply the saved paper size when the printing profile is selected, check this check box.

If this check box is unchecked, the paper size is not saved, and consequently the paper size setting is not applied when the printing profile is selected. Instead the printer prints with the paper size specified with the application software.

Save the orientation setting

Saves the **Orientation** to the printing profile in **Commonly Used Settings**.

To apply the saved print orientation when the printing profile is selected, check this check box.

If this check box is unchecked, the print orientation is not saved, and consequently the **Orientation** setting is not applied when the printing profile is selected. Instead the printer prints with the print orientation specified with the application software.

Save the copies setting

Saves the **Copies** setting to the printing profile in **Commonly Used Settings**.

To apply the saved copies setting when the printing profile is selected, check this check box.

If this check box is unchecked, the copies setting is not saved, and consequently the **Copies**

setting is not applied when the printing profile is selected. Instead the printer prints with the copies setting specified with the application software.

Custom Paper Size dialog box

This dialog box allows you to specify the size (width and height) of the custom paper.

Units

Select the unit for entering a user-defined paper size.

Paper Size

Specifies the **Width** and the **Height** of the custom paper. Measurement is shown according to the units specified in **Units**.

Printer Media Information dialog box

This dialog box allows you to check the printer settings and apply the checked settings to the printer driver.

Paper Source

Check the setting or select a new paper source.

Media Type

Displays the **Media Type** that is currently set on the printer.
To apply the displayed setting to the printer driver, click **Set**.

Page Size

Displays the **Page Size** that is currently set on the printer.
To apply the displayed setting to the printer driver, click **Set**.

Related Topics

- Basic Printing Setup
- Setting a Page Size and Orientation
- Setting the Number of Copies and Printing Order
- Execute Borderless Printing
- Duplex Printing
- Setting Up Envelope Printing
- Printing on Postcards
- Displaying the Print Results Before Printing
- Setting Paper Dimensions (Custom Size)
- Printing a Color Document in Monochrome
- Specifying Color Correction
- Adjusting Color Balance
- Adjusting Color Balance Using Sample Patterns (Printer Driver)
- Adjusting Brightness
- Adjusting Intensity
- Adjusting Contrast
- Adjusting Intensity/Contrast Using Sample Patterns (Printer Driver)
- Registering a Frequently Used Printing Profile

Main Tab Description

The **Main** tab allows you to create a basic print setup in accordance with the media type. Unless special printing is required, normal printing can be performed just by setting the items on this tab.

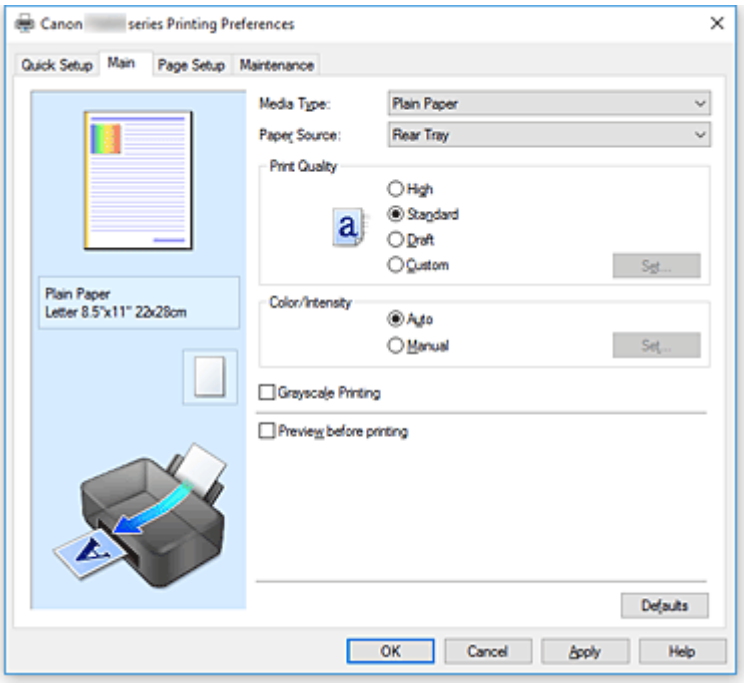

Settings Preview

The paper illustration shows how the original will be laid out on a sheet of paper.

You can check an overall image of the layout.

Media Type

Selects a type of printing paper.

Select a media type that matches the paper that is loaded in the printer. This ensures that printing is carried out properly for the specified paper.

Paper Source

Shows the source from which paper is supplied.

Rear Tray

Paper is always supplied from the rear tray.

Print Quality

Selects your desired printing quality.

Select one of the following to set the print quality level that is appropriate for the purpose.

Important

- Depending on the **Media Type** settings, the same print results may be produced even if the **Print Quality** is changed.

High

Gives priority to print quality over printing speed.

Standard

Prints with average speed and quality.

Draft

This setting is appropriate for test printing.

Custom

Select this when you want to set the printing quality level individually.

Set...

Select **Custom** for **Print Quality** to enable this button.

Open the **Custom** dialog box. You can then individually set the print quality level.

Color/Intensity

Selects color adjustment method.

Auto

Cyan, **Magenta**, **Yellow**, **Brightness**, **Intensity**, and **Contrast**, and so on are adjusted automatically.

Manual

Select when you set the individual settings such as **Cyan**, **Magenta**, **Yellow**, **Brightness**, **Intensity**, and **Contrast**, etc. and **Color Correction** method.

Set...

Select **Manual** for **Color/Intensity** to enable this button.

In the **Manual Color Adjustment** dialog box, you can adjust individual color settings such as **Cyan**, **Magenta**, **Yellow**, **Brightness**, **Intensity**, and **Contrast** on the **Color Adjustment** tab, and select the **Color Correction** method on the **Matching** tab.

Note

- If you want to use an ICC profile to adjust colors, use the **Manual Color Adjustment** dialog box to set the profile.

Grayscale Printing

This function converts the data to monochrome data when printing your document.

Check this check box to print a color document in monochrome.

Preview before printing

Shows what the print result will look like before you actually print the data.

Check this check box to display a preview before printing.

Defaults

Restores all the settings you have changed to their default values.

Clicking this button restores all the settings on the current screen to their default values (factory settings).

Custom dialog box

Set the quality level, and select the desired print quality.

Quality

You can use the slider bar to adjust the print quality level.

Important

- Certain print quality levels cannot be selected depending on the settings of **Media Type**.

Note

- The **High**, **Standard**, or **Draft** print quality modes are linked with the slider bar. Therefore when the slider bar is moved, the corresponding quality and value are displayed on the left. This is the same as when the corresponding radio button is selected for **Print Quality** on the **Main** tab.

Color Adjustment Tab

This tab allows you to adjust the color balance by changing the settings of the **Cyan**, **Magenta**, **Yellow**, **Brightness**, **Intensity**, and **Contrast** options.

Preview

Shows the effect of color adjustment.
The color and brightness change when each item is adjusted.

Note

- The graphic is in monochrome when the **Grayscale Printing** check box is checked.

View Color Pattern

Displays a pattern for checking color changes produced by color adjustment.
If you want to display the preview image with a color pattern, check this check box.

Cyan / Magenta / Yellow

Adjusts the strengths of **Cyan**, **Magenta**, and **Yellow**.
Moving the slider to the right makes a color stronger, and moving the slider to the left makes a color weaker.
You can also directly enter a value linked to the slider. Enter a value in the range from -50 to 50.
This adjustment changes the relative amount of ink of each color used, which alters the total color balance of the document. Use your application if you want to change the total color balance significantly. Use the printer driver only if you want to adjust the color balance slightly.

Important

- When **Grayscale Printing** is checked on the **Main** tab, **Cyan**, **Magenta**, and **Yellow** appear grayed out and are unavailable.

Brightness

Selects the brightness of your print.
You cannot change the levels of pure white and black. However, the brightness of the colors between white and black can be changed.

Intensity

Adjusts the overall intensity of your print.
Moving the slider to the right increases the intensity, and moving the slider to the left decreases the intensity.
You can also directly enter a value linked to the slider. Enter a value in the range from -50 to 50.

Contrast

Adjusts the contrast between light and dark in the image to be printed.
Moving the slider to the right increases the contrast, moving the slider to the left decreases the contrast.
You can also directly enter a value linked to the slider. Enter a value in the range from -50 to 50.

Print a pattern for color adjustment

When the color balance or intensity/contrast is changed, the pattern printing function prints a list of the adjustment results along with the adjustment values.
Select this function when printing a pattern for color adjustment.

Pattern Print preferences...

Check **Print a pattern for color adjustment** to enable this button.
The **Pattern Print** dialog box opens and allows you to set pattern printing settings.

Pattern Print dialog box

Performs the setup for printing of patterns that allow you to check the color balance and intensity/contrast of documents.

Parameters to Adjust

Select the item to be checked by pattern printing.

Cyan/Magenta/Yellow

Prints a pattern that allows you to check the cyan/magenta/yellow balance.

Important

- When **Grayscale Printing** is checked on the **Main** tab, **Cyan/Magenta/Yellow** appear grayed out and are unavailable.

Intensity/Contrast

Prints a pattern that allows you to check the intensity/contrast balance.

Printer Paper Size

Selects the paper size to be used for pattern printing.
This setting is linked to **Printer Paper Size** on the **Page Setup** tab.

Note

- Depending on the paper size selected on the **Page Setup** tab, there may be sizes that cannot be selected.

Amount of Pattern Instances

Sets the number of patterns to be printed.
You can select from **Largest**, **Large**, and **Small**. When you select a pattern size, the number of patterns that can be printed is as follows:

Note

- **Largest** and **Large** cannot be selected when certain paper sizes or output paper sizes are selected.
- The setting preview on the **Main** tab displays an image that allows you to check the overall layout.

Largest

Cyan/Magenta/Yellow 37
Intensity/Contrast 49

Large

Cyan/Magenta/Yellow 19
Intensity/Contrast 25

Small

Cyan/Magenta/Yellow 7

Intensity/Contrast 9

Color Variation Between Instances

Sets the amount of color change between neighboring patterns.

Select from **Large**, **Medium**, and **Small**. **Large** produces a large amount of change, and **Small** produces a small amount of change.

Note

- **Large** is about double the size of **Medium**, and **Small** is about half the size of **Medium**.

Matching Tab

Allows you to select the method for adjusting colors to match the type of document to be printed.

Color Correction

Allows you to select **Driver Matching**, **ICM**, or **None** to match the purpose of the print operation.

Important

- When **Grayscale Printing** is checked on the **Main** tab, **Color Correction** appears grayed out and is unavailable.

Driver Matching

With Canon Digital Photo Color, you can print sRGB data with color tints that most people prefer.

ICM

Adjusts the colors by using an ICC profile when printing.

Important

- If the application software is set so that ICM is disabled, **ICM** is unavailable for **Color Correction** and the printer may not be able to print the image data properly.

None

Disables color adjustment with the printer driver.

Related Topics

- Setting the Print Quality Level (Custom)
- Adjusting Color Balance
- Adjusting Brightness
- Adjusting Intensity
- Adjusting Contrast
- Adjusting Color Balance Using Sample Patterns (Printer Driver)
- Adjusting Intensity/Contrast Using Sample Patterns (Printer Driver)
- Specifying Color Correction
- Adjusting Colors with the Printer Driver
- Printing with ICC Profiles
- Printing a Color Document in Monochrome
- Displaying the Print Results Before Printing

Page Setup Tab Description

The **Page Setup** tab allows you to determine how a document is to be arranged on the paper. Also, this tab allows you to set the number of copies and the order of printing. If the application which created the document has a similar function, set them with the application.

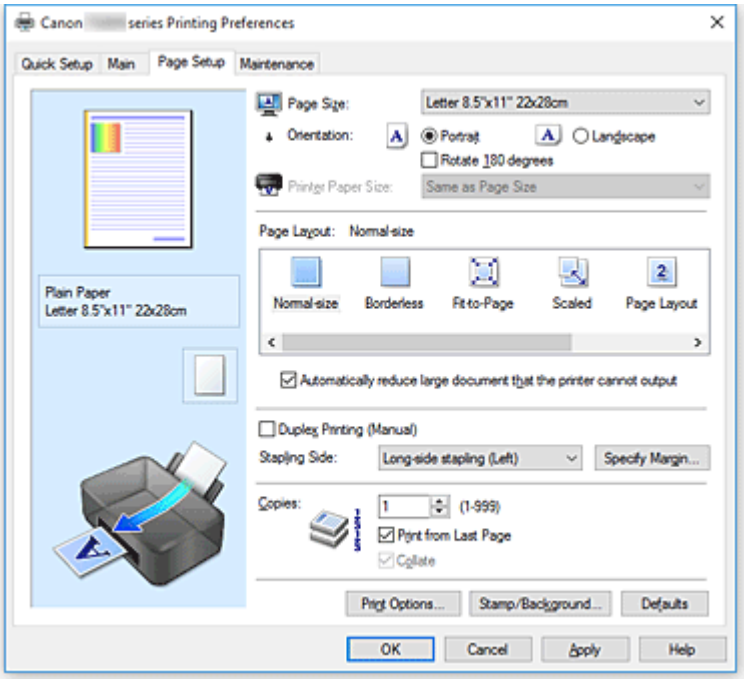

Settings Preview

The paper illustration shows how the original will be laid out on a sheet of paper.
You can check an overall image of the layout.

Page Size

Selects a page size.
Ensure that you select the same page size as you selected within the application.
If you select **Custom...**, the **Custom Paper Size** dialog box opens and allows you to specify any vertical and horizontal dimensions for the paper size.

Orientation

Selects the printing orientation.
If the application used to create your document has a similar function, select the same orientation that you selected in that application.

Portrait

Prints the document so that its top and bottom positions are unchanged relative to the paper feed direction. This is the default setting.

Landscape

Prints the document by rotating it 90 degrees relative to the paper feed direction.
You can change the rotation direction by going to the Canon IJ Printer Assistant Tool, opening the **Custom Settings** dialog box, and then using **Rotate 90 degrees left when orientation is [Landscape]** check box.
To rotate the document 90 degrees to the left when printing, select the **Rotate 90 degrees left when orientation is [Landscape]** check box.

Rotate 180 degrees

Prints the document by rotating it 180 degrees against the paper feed direction.

The width of print area and the amount of extension that are configured in other application software will be reversed vertically and horizontally.

Printer Paper Size

Selects the size of paper actually loaded into the printer.

The default setting is **Same as Page Size** to perform normal-sized printing.

You can select a printer paper size when you select **Fit-to-Page**, **Scaled**, **Page Layout**, **Tiling/Poster**, or **Booklet** for **Page Layout**.

If you select a paper size that is smaller than the **Page Size**, the document size will be reduced. If you select a paper size that is larger, the document size will be enlarged.

Also if you select **Custom...**, the **Custom Paper Size** dialog box opens and allows you to specify any vertical and horizontal dimensions for the paper size.

Page Layout

Selects the size of the document you want to print and the type of printing.

Normal-size

This is the normal printing method. Select this when you do not specify any page layout.

Automatically reduce large document that the printer cannot output

If the printer cannot print the paper size of a document, the printer can automatically reduce the size when it prints the document.

Check this check box to reduce the size when printing the document.

Borderless

Chooses whether you are printing on a full page without any page margins or printing with page margins.

In borderless printing, originals are enlarged to extend slightly off the paper. Thus, printing can be performed without any margins (border).

Use **Amount of Extension** to adjust how much of the document extends off the paper during borderless printing.

Amount of Extension

Adjusts how much of the document extends off the paper during borderless printing.

Moving the slider to the right increases the amount of extension and allows you to perform borderless printing with no problems.

Moving the slider to the left reduces the amount of extension and expands the range of the document to print.

Fit-to-Page

This function enables you to automatically enlarge or reduce documents to fit to the paper size loaded in the printer without changing the paper size you specified in your application software.

Scaled

Documents can be enlarged or reduced to be printed.

Specify the size in **Printer Paper Size**, or enter the scaling ratio in the **Scaling** box.

Scaling

Specifies an enlargement or reduction ratio for the document you want to print.

Page Layout

Multiple pages of document can be printed on one sheet of paper.

Specify...

Opens the **Page Layout Printing** dialog box.

Click this button to set details on page layout printing.

Tiling/Poster

This function enables you to enlarge the image data and divide the enlarged data into several pages to be printed. You can also glue together these sheets of paper to create large printed matter, such as a poster.

Specify...

Opens the **Tiling/Poster Printing** dialog box.

Click this button to set details on tiling/poster printing.

Booklet

The booklet printing function allows you to print data for a booklet. Data is printed on both sides of the paper. This type of printing ensures that pages can be collated properly, in page number order, when the printed sheets are folded and stapled at the center.

Specify...

Opens the **Booklet Printing** dialog box.

Click this button to set details on booklet printing.

Duplex Printing (Manual)

Select whether to print the document to both sides of the paper manually or to one side of the paper.

Check this check box to print the document on both sides.

This function can be used only when **Plain Paper** is selected for **Media Type** and one of **Normal-size**, **Fit-to-Page**, **Scaled**, or **Page Layout** is selected.

Stapling Side

Selects the stapling margin position.

The printer analyzes the **Orientation** and **Page Layout** settings, and automatically selects the best stapling margin position. Check **Stapling Side**, and select from the list to change it.

Specify Margin...

Opens the **Specify Margin** dialog box.

You can specify the width of the margin.

Copies

Specifies the number of copies you want to print. You can specify a value from 1 to 999.

Important

- If the application used to create your document has a similar function, specify the number of copies with the application without specifying it here.

Print from Last Page

Check this check box when you want to print from the last page in order. If you do this, you do not need to sort the pages into their correct order after printing.

Uncheck this check box to print your document in normal order, starting from the first page.

Collate

Check this check box to group together the pages of each copy when you want to print multiple copies.

Uncheck this check box when you want to print with all pages of the same page number grouped together.

Important

- When the application software that you used to create the document has the same function, give priority to the printer driver settings. However, if the print results are not acceptable, specify the function settings on the application software. When you specify the number of copies and the printing order with both the application and this printer driver, the number of copies may be multiplied numbers of the two settings or the specified printing order may not be enabled.

Print Options...

Opens the **Print Options** dialog box.

Changes detailed printer driver settings for print data that is sent from applications.

Stamp/Background...

Opens the **Stamp/Background** dialog box.

The **Stamp** function allows you to print a stamp text or a bitmap over or behind document data. It also allows you to print date, time and user name. The **Background** function allows you to print a light illustration behind the document data.

Depending on the environment, **Stamp** and **Background** may not be available.

Custom Paper Size dialog box

This dialog box allows you to specify the size (width and height) of the custom paper.

Units

Select the unit for entering a user-defined paper size.

Paper Size

Specifies the **Width** and the **Height** of the custom paper. Measurement is shown according to the units specified in **Units**.

Page Layout Printing dialog box

This dialog box allows you to select the number of document pages to be placed on one sheet of paper, the page order, and whether a page border line is to be printed around each document page.

The settings specified in this dialog box can be confirmed in the settings preview on the printer driver.

Preview Icon

Shows the settings made on the **Page Layout Printing** dialog box.

You can check what the print result will look like before you actually print the data.

Page Layout

Specifies the number of document pages to fit on one sheet.

Page Order

Specifies the document orientation to be printed on a sheet of paper.

Page Border

Prints a page border line around each document page.

Check this check box to print the page border line.

Tiling/Poster Printing dialog box

This dialog box allows you to select the size of the image to be printed. You can also make settings for cut lines and paste markers which are convenient for pasting together the pages into a poster.
The settings specified in this dialog box can be confirmed in the settings preview on the printer driver.

Preview Icon

Shows the settings of the **Tiling/Poster Printing** dialog box.
You can check what the print result will look like.

Image Divisions

Select the number of divisions (vertical x horizontal).
As the number of divisions increases, the number of sheets used for printing increases. If you are pasting pages together to create a poster, increasing the number of divisions allows you to create a larger poster.

Print "Cut/Paste" in margins

Specifies whether to print the words "Cut" and "Paste" in the margins. These words serve as guidelines for pasting together the pages into a poster.
Check this check box to print the words.

Note

- Depending on the environment, this function may not be available.

Print "Cut/Paste" lines in margins

Specifies whether to print cut lines that serve as guidelines for pasting together the pages into a poster.
Check this check box to print the cut lines.

Print page range

Specifies the printing range. Select **All** under normal circumstances.
Select **Pages** to specify a specific page or range.

Note

- If some of the pages have not been printed well, specify the pages that do not need to be printed by clicking them in the settings preview of the **Page Setup** tab. Only the pages shown on the screen will be printed this time.

Booklet Printing dialog box

This dialog box allows you to set how to bind the document as a booklet. Printing only on one side and printing a page border, can also be set in this dialog box.
The settings specified in this dialog box can be confirmed in the settings preview on the printer driver.

Preview Icon

Shows the settings made on the **Booklet Printing** dialog box.
You can check what the document will look like when printed as a booklet.

Margin for stapling

Specifies which side of the booklet is to be stapled.

Insert blank page

Selects whether to print the document on one side or both sides of the booklet.
Check this check box to print the document on one side of the booklet and select the side to be left blank from the list.

Margin

Specifies the width of the stapling margin.
The specified width becomes the stapling margin from the center of the sheet.

Page Border

Prints a page border line around each document page.
Check this check box to print the page border line.

Specify Margin dialog box

This dialog box allows you to specify the margin width for the side to be stapled. If a document does not fit on one page, the document is reduced when printed.

Margin

Specifies the width of the stapling margin.
The width of the side specified by **Stapling Side** becomes the stapling margin.

Print Options dialog box

Makes changes to print data that is sent to the printer.

Depending on the environment, this function may not be available.

Disable ICM required from the application software

Disables the ICM function required from the application software.
When an application software uses Windows ICM to print data, unexpected colors may be produced or the printing speed may decrease. If these problems occur, checking this check box may resolve the problems.

Important

- Uncheck this check box under normal circumstances.
- This function does not work when **ICM** is selected for **Color Correction** on the **Matching** tab of the **Manual Color Adjustment** dialog box.

Disable the color profile setting of the application software

Checking this check box disables information in the color profile that was set on the application software.
When the information in the color profile set on the application software is output to the printer driver, the print result may contain unexpected colors. If this happens, checking this check box may resolve the problem.

Important

- Even when this check box is checked, only some of the information in the color profile is disabled, and the color profile can still be used for printing.
- Uncheck this check box under normal circumstances.

Ungroup Papers

Sets the display method of **Media Type**, **Page Size**, and **Printer Paper Size**.
To display the items separately, select the check box.
To display the items as a group, clear the check box.

Do not allow application software to compress print data

Compression of the application software print data is prohibited.
If the print result has missing image data or unintended colors, selecting this check box may improve the condition.

Important

- Uncheck this check box under normal circumstances.

Print after creating print data by page

The print data is created in page units, and printing starts after the processing of one page of print data is complete.
If a printed document contains unintended results such as streaks, selecting this check box may improve the results.

Important

- Uncheck this check box under normal circumstances.

Prevention of Print Data Loss

You can reduce the size of the print data that was created with the application software and then print the data.
Depending on the application software being used, the image data may be cut off or may not be printed properly. In such cases, select **On**. If you will not be using this function, select **Off**.

Important

- When using this function, the print quality may drop depending on the print data.

Unit of Print Data Processing

Selects the processing unit of the print data to be sent to the printer.
Select **Recommended** under normal circumstances.

Important

- A large amount of memory may be used for certain settings.
  Do not change the setting if your computer has a small amount of memory.

Print With

Specify the ink tank to be used from the installed ink tanks.
Select from **All Colors (Default)** and **Black Only**.

Important

- When the following settings are specified, **Black Only** does not function because the printer uses an ink tank other than black to print documents.
  - Other than **Plain Paper**, **Envelope**, **Ink Jet Hagaki (A)**, **Hagaki K (A)**, **Hagaki (A)**, or **Hagaki** is selected for **Media Type** on the **Main** tab
  - **Borderless** is selected from the **Page Layout** list on the **Page Setup** tab
- Do not detach the ink tank that is not in use. Printing cannot be performed while either ink tank is detached.

Stamp/Background dialog box

The **Stamp/Background** dialog box allows you to print a stamp and/or background over or behind the document pages. In addition to the pre-registered ones, you can register and use your original stamp or background.

Stamp

Stamp printing is a function that prints a stamp over a document.
Check this check box and select a title from the list to print a stamp.

Define Stamp...

Opens the **Stamp Settings** dialog box.
You can check the details of a selected stamp or save a new stamp.

Place stamp over text

Sets how the stamp is to be printed over the document.
Check the **Stamp** check box to enable this.
Check this check box to print a stamp over the printed document page. The printed data may be hidden behind the stamp.
Uncheck this check box to print the document data over the stamp. The printed data will not be hidden behind the stamp. However, the sections of the stamp that are overlapped by the document may be hidden.

Stamp first page only

Selects whether the stamp is to be printed on the first page only or on all pages when the document has two or more pages.
Check the **Stamp** check box to enable this.
Check this check box to print a stamp on the first page only.

Background

Background printing is a function that allows you to print an illustration or a similar object (bitmap) behind the document.
Check this check box to print a background and select a title from the list.

Select Background...

Opens the **Background Settings** dialog box.
You can register a bitmap as a background, and change layout method and intensity of the selected background.

Background first page only

Selects whether to print the background on the first page only or print on all pages when the document has two or more pages.
Check the **Background** check box to enable this.
Check this check box to print a background on the first page only.

Stamp Tab

The Stamp tab allows you to set the text and bitmap file (.bmp) to be used for a stamp.

Preview Window

Shows the status of the stamp configured in each tab.

Stamp Type

Specifies the stamp type.

Select **Text** to create a stamp with characters. Select **Bitmap** to create with a bitmap file. Select **Date/Time/User Name** to display the creation date/time and user name of the printed document.

The setting items in the **Stamp** tab change depending on the selected type.

When **Stamp Type** is **Text** or **Date/Time/User Name**

Stamp Text

Specifies the stamp text string.

Up to 64 characters can be entered.

For **Date/Time/User Name**, the creation date/time and user name of the printed object are displayed in **Stamp Text**.

Important

- **Stamp Text** appears grayed out and is unavailable if **Date/Time/User Name** is selected.

TrueType Font

Selects the font for the stamp text string.

Style

Selects the font style for the stamp text string.

Size

Selects the font size for the stamp text string.

Outline

Selects a frame that encloses the stamp text string.

If a large font size is selected for **Size**, characters may extend outside of the stamp border.

Color/Select Color...

Shows the current color for the stamp.

To select a different color, click **Select Color...** to open the **Color** dialog box, and select or create a color you wish to use as a stamp.

When **Stamp Type** is **Bitmap**

File

Specifies the name of the bitmap file to be used as the stamp.

Select File...

Opens the dialog box to open a file.

Click this button to select a bitmap file to be used as a stamp.

Size

Adjusts the size of the bitmap file to be used as a stamp.

Moving the slider to the right increases the size, moving the slider to the left decreases the size.

Transparent white area

Specifies whether to make white-filled areas of the bitmap transparent.

Check this check box to make white-filled areas of the bitmap transparent.

Note

- Click **Defaults** to set **Stamp Type** to text, **Stamp Text** to blank, **TrueType Font** to Arial, **Style** to Regular, **Size** to 36 points, **Outline** unchecked, and **Color** to gray with the RGB values (192, 192, 192).

Placement Tab

The Placement tab allows you to set the position where the stamp is to be printed.

Preview Window

Shows the status of the stamp configured in each tab.

Position

Specifies the stamp position on the page.
Selecting **Custom** from the list allows you to enter values for the **X-Position** and **Y-Position** coordinates directly.

Orientation

Specifies the angle of rotation for the stamp. The angle can be set by entering the number of degrees.
Negative values rotate the stamp clockwise.

Note

- **Orientation** is enabled only when **Text** or **Date/Time/User Name** is selected for **Stamp Type** on the **Stamp** tab.

Note

- Click **Defaults** to set the stamp position to **Center** and the orientation to 0.

Save settings Tab

The **Save settings** tab allows you to register a new stamp or delete an unnecessary stamp.

Title

Enter the title to save the stamp you created.
Up to 64 characters can be entered.

Note

- Spaces, tabs, and returns cannot be entered at the beginning or end of a title.

Stamps

Shows a list of saved stamp titles.
Specify a title to display the corresponding stamp in **Title**.

Save/Save overwrite

Saves the stamp.
Enter a title in **Title**, and then click this button.

Delete

Deletes an unnecessary stamp.
Specify the title of an unnecessary stamp from the **Stamps** list, and click this button.

Background Tab

The Background tab allows you to select a bitmap file (.bmp) to be used as a background or determine how to print the selected background.

Preview Window

Shows the status of the bitmap set on the **Background** tab.

File

Specifies the name of the bitmap file to be used as the background.

Select File...

Opens the dialog box to open a file.
Click this button to select a bitmap file (.bmp) to be used as the background.

Layout Method

Specifies how the background image is to be placed on the paper.
When **Custom** is selected, you can set coordinates for **X-Position** and **Y-Position**.

Intensity

Adjusts the intensity of the bitmap to be used as a background.
Moving the slider to the right increases the intensity, and moving the slider to the left decreases the intensity. To print the background at the original bitmap intensity, move the slider to the rightmost position.

Note

- Depending on the environment, this function may not be available.
- Click **Defaults** to set **File** to blank, **Layout Method** to **Fill page**, and the **Intensity** slider to the middle.

Save settings Tab

The **Save settings** tab allows you to register a new background or delete an unnecessary background.

Title

Enter the title to save the background image you specified.
Up to 64 characters can be entered.

Note

- Spaces, tabs, and returns cannot be entered at the beginning or end of a title.

Backgrounds

Shows a list of registered background titles.
Specify a title to display the corresponding background in **Title**.

Save/Save overwrite

Saves the image data as a background.
After inserting the **Title**, click this button.

Delete

Deletes an unnecessary background.
Specify the title of an unnecessary background from the **Backgrounds** list, and then click this button.

Maintenance Tab Description

The **Maintenance** tab allows you to start the Canon IJ Printer Assistant Tool or check the status of the printer.

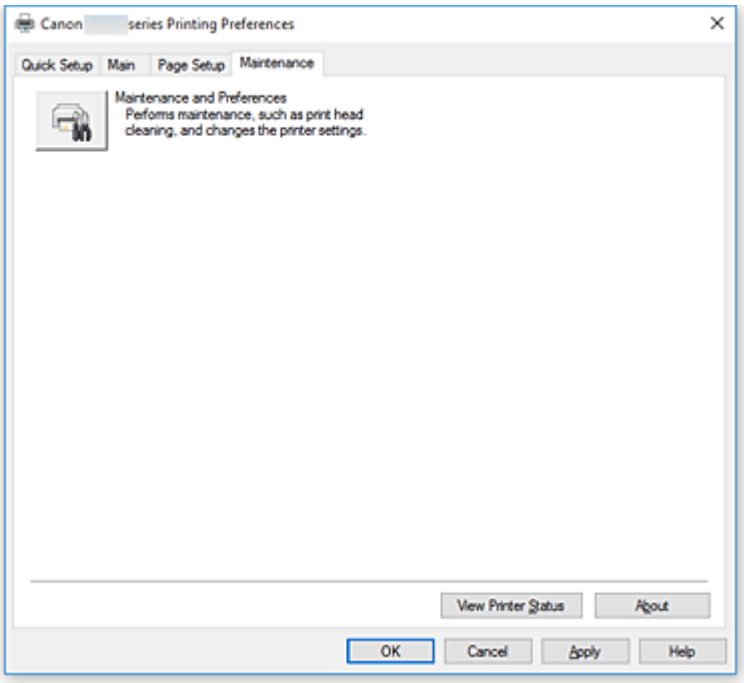

Maintenance and Preferences

Canon IJ Printer Assistant Tool is started.

You can perform printer maintenance or change the settings of the printer.

View Printer Status

Starts the Canon IJ Status Monitor.

Perform this function when you want to check the printer status and how a print job is proceeding.

About

Opens the **About** dialog box.

The version of the printer driver, plus a copyright notice, can be checked.

In addition, the language to be used can be switched.

About dialog box

When you click **About**, the **About** dialog box is displayed.

This dialog box displays the version, copyright, and module list of the printer driver. You can select the language to be used and switch the language displayed in the setup window.

Modules

Lists the printer driver modules.

Language

Specifies the language you wish to use in the printer driver setup window.

Important

- If the font for displaying the language of your choice is not installed in your system, the characters will be garbled.

Canon IJ Status Monitor Description

The Canon IJ Status Monitor displays the printer status and the printing progress. The printer status is shown by the images, icons, and messages in the status monitor.

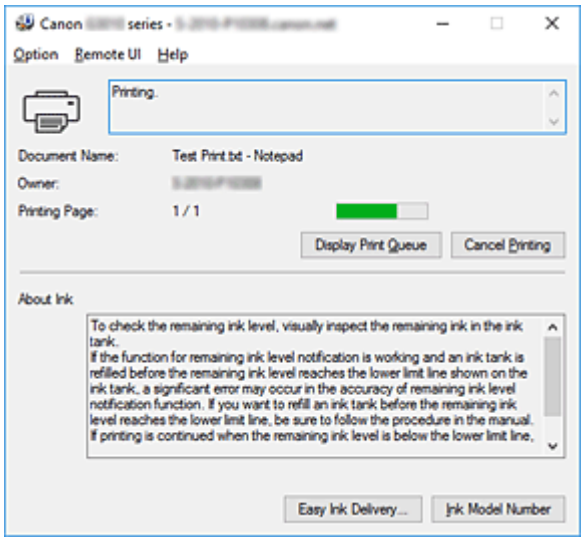

Features of the Canon IJ Status Monitor

The Canon IJ Status Monitor has the following functions:

Onscreen display of printer status

The status monitor displays the printer status in real-time.
You can check the progress of each document to be printed (print job).

Display of error content and correction procedure

The status monitor displays information on any errors that occur on the printer.
You can then immediately check what sort of action to perform.

Overview of the Canon IJ Status Monitor

The Canon IJ Status Monitor uses messages to display the printer status and the ink status.
During printing, you can check information about the document being printed and the print progress.
If an error occurs, the status monitor displays the error content and instructions on how to correct the error. Follow the message instructions.

Printer

Canon IJ Status Monitor shows an icon when a warning or error occurs to the printer.

: There is a warning.

: There has been an operator error.

: There is a notice about something other than a warning or an error.

: There has been an error which requires a service.

Document Name

Name of the document being printed.

Owner

Owner's name of the document being printed.

Printing Page

Page number of current page and the total page count.

Display Print Queue

The print queue, which controls the current document and documents waiting to be printed.

Cancel Printing

Cancels printing.

About Ink

Displays messages about ink.

Ink Model Number

You can look up the correct ink tank for your printer.

Option Menu

If a printer message appears, select **Enable Status Monitor** to start the Canon IJ Status Monitor.

Select **Enable Status Monitor** to use the following commands:

Always Display Current Job

Displays the Canon IJ Status Monitor whenever a document is being printed.

Always Display on Top

Displays the Canon IJ Status Monitor in front of other windows.

Display Guide Message

Displays guide messages for complicated paper setting operations.

Envelope Printing

Displays guide messages when envelope printing starts.

To hide these guide messages, select the **Do not show this message again** check box.

To display the guide messages again, open the **Option** menu, select **Display Guide Message**, click **Envelope Printing**, and enable this setting.

Hagaki Printing

Displays guide messages before the printer begins hagaki printing.

To hide these guide messages, select the **Do not show this message again** check box.

To display the guide messages again, open the **Option** menu, select **Display Guide Message**, click **Hagaki Printing**, and enable this setting.

Start when Windows is Started

Automatically starts the Canon IJ Status Monitor when Windows is started.

Remote UI menu

You are able to open the printer's Remote User Interface.

You are able to check the printer status and run maintenance functions on the printer when connected to and using it through a network.

Note

- When the printer is being used via USB connection **Remote UI** will not display.

Printer Information

Allows you check detailed information, such as the printer status, the print progress, and remaining ink levels.

Maintenance

Allows you to run printer maintenance and change printer settings.

Download Security Certificate

Displays the **For secure communication** window.
This window allows you to download the route certificate, register it to the browser, and disable warning displays.

Help Menu

Select this menu to display Help information for the Canon IJ Status Monitor including version and copyright information.

Installing the MP Drivers

You can access our web site through the Internet and download the latest MP Drivers for your model.

1. Turn off the printer

2. Start the installer

   Double-click the icon of the downloaded file.
   The installation program starts.

   Important

   - A confirmation/warning dialog box may appear when starting, installing or uninstalling software. This dialog box appears when administrative rights are required to perform a task.
     When you are logged on to an administrator account, click **Yes** (or **Continue**, **Allow**) to continue.
     Some applications require an administrator account to continue. In such cases, switch to an administrator account, and restart the operation from the beginning.

3. Install the MP Drivers

   Take the appropriate action as described on the screen.

4. Complete the installation

   Click **Complete**.

Depending on the environment you are using, a message prompting you to restart the computer may be displayed. To complete the installation properly, restart the computer.

Important

- You can download the MP Drivers for free, but any Internet access charges incurred are your responsibility.
- Before installing the latest MP Drivers, delete the previously installed version.

Related Topics

- Obtaining the Latest MP Drivers
- Deleting the Unnecessary MP Drivers
- Before Installing the MP Drivers

Printing from Smartphone/Tablet

- Printing from iPhone/iPad/iPod touch (iOS)
- Printing from Smartphone/Tablet (Android)
- Printing from Windows 10 Mobile Device
- Printing/Scanning with Wireless Direct

Printing/Scanning with Wireless Direct

You can connect devices (e.g. smartphone, or tablet) to the printer by two methods below.

- Wireless connection (connecting devices via a wireless router)
- Direct wireless connection (connecting devices using Wireless Direct)

This section describes Wireless Direct, which allows you to print or scan by connecting the devices to the printer directly.

Follow the procedure below to use Wireless Direct.

1. Preparing the printer.

   Changing Printer Setting to Use Wireless Direct

2. Preparing a device to connect to the printer.

   Changing Settings of a Device and Connecting It to the Printer

3. Printing/Scanning.

   Printing/Scanning with Wireless Direct

Important

- You can connect up to 5 devices to the printer at the same time.
- Check the usage restrictions and switch the printer to the Wireless Direct.

  Restrictions

Note

- For details on how to change the printer setting to wireless LAN connection, refer to the following.

  Changing Printer Setting to Use Wireless LAN

Changing Printer Setting to Use Wireless Direct

1. Make sure that printer is turned on.

2. Press the **Setup** button.

   The **Setup menu** screen is displayed.

3. Select **Device settings** and then press the **OK** button.

4. Select **LAN settings** and then press the **OK** button.

5. Select **Wireless Direct** and then press the **OK** button.

6. Select **Switch WL Direct** and then press the **OK** button.

7. Select **Yes** and then press the **OK** button.

When the setting is completed, the **Wireless router info** screen is displayed.

8. Select **Done** and then press the **OK** button.

   The Wireless Direct is enabled and a device can be connected to the printer wirelessly.

   Note

   - You can check the following on the **Wireless router info** screen. Use the ◄► button to select an item you want to check and then press the **OK** button.
     - **SSID**: Identifier
     - **Security protocol**: Security setting and password
     - **WL Direct dev. name**: Printer name displayed on a Wi-Fi Direct compatible device

     The password is required when connecting a device to the printer. Depending on the device you are using, no password is required.

     When you connect a Wi-Fi Direct compatible device to the printer, select the printer name from your device.
   - For details on how to update the identifier (SSID) and the security setting, refer to the following.

     Changing Wireless Direct Setting

Changing Settings of a Device and Connecting It to the Printer

1. Turn on wireless communication on your device.

   Enable "Wi-Fi" on your device's "Setting" menu.

   For more on turning on wireless communication, see your device's instruction manual.

2. Select "DIRECT-XXXX-G4010series" ("X" represents alphanumeric characters) from list displayed on your device.

   Note

   - If "DIRECT-XXXX-G4010series" does not appear on the list, Wireless Direct is not enabled.

     See Changing Printer Setting to Use Wireless Direct to enable Wireless Direct.

3. Enter password.

   Your device is connected to the printer.

   Note

   - You can check the password by printing the network settings from the printer.

     Printing Network Settings
   - Depending on the device you are using, no password is required.
   - If your Wi-Fi Direct compatible device is set to prioritize using Wi-Fi Direct and it is connecting to the printer, the printer displays a confirmation screen asking if you allow the device to connect to the printer.

Make sure the name on the LCD is the same as that of your wireless communication device and select **Yes**.

Printing/Scanning with Wireless Direct

After connecting a device and the printer, start printing/scanning from the application of your device.

Note

- For more on printing or scanning from a device via wireless LAN, refer to the device's or application's instruction manual.
- You can print/scan from your smartphone or tablet by installing Canon PRINT Inkjet/SELPHY. Download it from App Store and Google Play.
  - For iOS
  - For Android

Changing Wireless Direct Setting

Change the settings for the Wireless Direct following the procedure below.

1. Make sure that printer is turned on.
2. Press the **Setup** button.

   The **Setup menu** screen is displayed.
3. Select **Device settings** and then press the **OK** button.
4. Select **LAN settings** and then press the **OK** button.
5. Select **Wireless Direct** and then press the **OK** button.
6. Select a setting item and then press the **OK** button.

   Change name (SSID)

   Updates the identifier (SSID) for Wireless Direct or the printer name displayed on a Wi-Fi Direct compatible device.

   - **Manual setup**
     1. Select **Manual setup** and then press the **OK** button.
     2. Enter new printer name and then press the **OK** button.
     3. Confirm your entries and press the **OK** button.
   - **Auto setup**
     1. Select **Auto setup** and then press the **OK** button.
     2. Select **Yes** and then press the **OK** button.
     3. Select **Done** and then press the **OK** button.

If you select **SSID** and press the **OK** button, you can check the updated identifier (SSID).

Change password

- **Manual setup**
  1. Select **Manual setup** and then press the **OK** button.
  2. Enter new password and then press the **OK** button.
- **Auto setup**
  1. Select **Auto setup** and then press the **OK** button.
  2. Select **Yes** and then press the **OK** button.
  3. Select **Done** and then press the **OK** button.

     If you select **Security protocol** instead of **Done**, you can check the updated password.

Confirm request

To display the confirmation screen when a Wi-Fi Direct compatible device is connecting to the printer, select **Yes** and press the **OK** button.

Important

- To prevent an unauthorized access, we recommend you should not change the setting from the default.

Note

- If you change the Wireless Direct setting of the printer, also change the wireless router setting of the device.

Changing Printer Setting to Use Wireless LAN

Follow the procedure below to change the printer setting to use wireless LAN.

1. Make sure that printer is turned on.
2. Press the **Setup** button.

   The **Setup menu** screen is displayed.
3. Select **Device settings** and then press the **OK** button.
4. Select **LAN settings** and then press the **OK** button.
5. Select **Wireless LAN** and then press the **OK** button.
6. Select **WLAN activ./inactiv.** and then press the **OK** button.
7. Select **Active** and then press the **OK** button.

Printing Using Operation Panel

- Printing Templates Such as Lined or Graph Paper

Printing Templates Such as Lined or Graph Paper

You can print a template form such as lined paper, graph paper, or checklist, etc. on A4, B5, or Letter-sized plain paper.

- Printable template forms
- Printing template forms

Printable template forms

The following templates are available:

- **Notebook paper**

You can select three line spacing formats.

Setting on the LCD:

  - **Notebook paper 1**: 8 mm spacing
  - **Notebook paper 2**: 7 mm spacing
  - **Notebook paper 3**: 6 mm spacing

Note

- You cannot print Notebook paper on B5 sized paper.

- **Graph paper**

You can select two square sizes.

Setting on the LCD:

  - **Graph paper 1**: Graph 5 mm
  - **Graph paper 2**: Graph 3 mm

Note

- You cannot print Graph paper on B5 sized paper.

- **Checklist**

You can print a notepad with checkboxes.

Setting on the LCD:

Checklist

- **Staff paper**

You can print staff paper with 10 or 12 staves.

Setting on the LCD:

  - **Staff paper 1**: 10 staves
  - **Staff paper 2**: 12 staves

- **Handwriting paper**

You can print handwriting paper.

Setting on the LCD:

Handwriting paper

- **Weekly schedule**

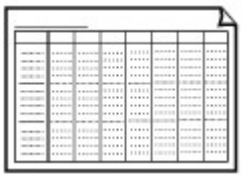

You can print a weekly schedule form.

Setting on the LCD:

Weekly schedule

- **Monthly schedule**

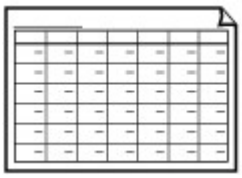

You can print a monthly schedule form.

Setting on the LCD:

Monthly schedule

Printing template forms

Print template form following the procedure below.

1. Make sure that printer is turned on.
2. Load A4, B5, or Letter-sized plain paper.
3. Press the **Setup** button.

   The **Setup menu** screen is displayed.
4. Select **Template print** and then press the **OK** button.

5. Select a template you want to print and then press the **OK** button.

   Printable template forms

6. Specify the paper size and then press the **OK** button.

   Note

   - The * (asterisk) on the LCD indicates the current setting.

7. Make sure that **Plain paper** is selected and then press the **OK** button.

8. Use the ◄► button or the Numeric buttons to specify the number of copies.

9. Press the **OK** button.

   The printer starts the color printing or the black & white printing depending on the selected form.

   - **Notebook paper 1** (color printing)
   - **Notebook paper 2** (color printing)
   - **Notebook paper 3** (color printing)
   - **Graph paper 1** (color printing)
   - **Graph paper 2** (color printing)
   - **Checklist** (black & white printing)
   - **Staff paper 1** (black & white printing)
   - **Staff paper 2** (black & white printing)
   - **Handwriting paper** (color printing)
   - **Weekly schedule** (black & white printing)
   - **Monthly schedule** (black & white printing)

   Note

   - You can also press the **Color** button or **Black** button to start printing.

Paper Settings

By registering the paper size and the media type loaded on the rear tray, you can prevent the printer from misprinting by displaying the message before printing starts when the paper size or the media type of the loaded paper differs from the paper settings for printing.

Note

- The default setting is different between when you print or copy from the operation panel of the printer, when you print from Smartphone/tablet, when you print from Windows, and when you print from macOS.

  Default Setting for Displaying the Message which Prevents Misprinting

When you load paper on the rear tray:

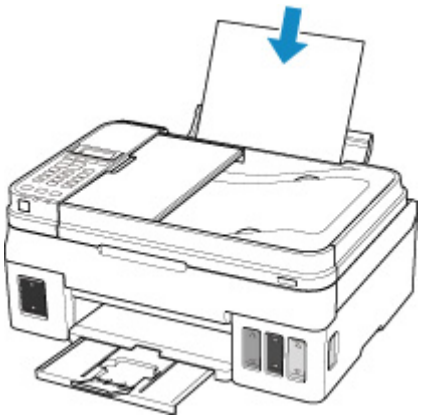

The screen to register the paper information is displayed.

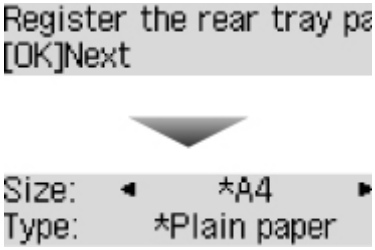

Register the paper size and the media type according to the loaded paper.

Important

- For more on the proper combination of paper settings you can specify by the printer driver for Windows and on the LCD:

  Paper Settings on the Printer Driver and the Printer (Media Type)
  Paper Settings on the Printer Driver and the Printer (Paper Size)

When the paper settings for printing/copying are different from the paper information registered in the printer:

Ex:

- Paper settings for printing/copying: A5

- Paper information registered in the printer: A4

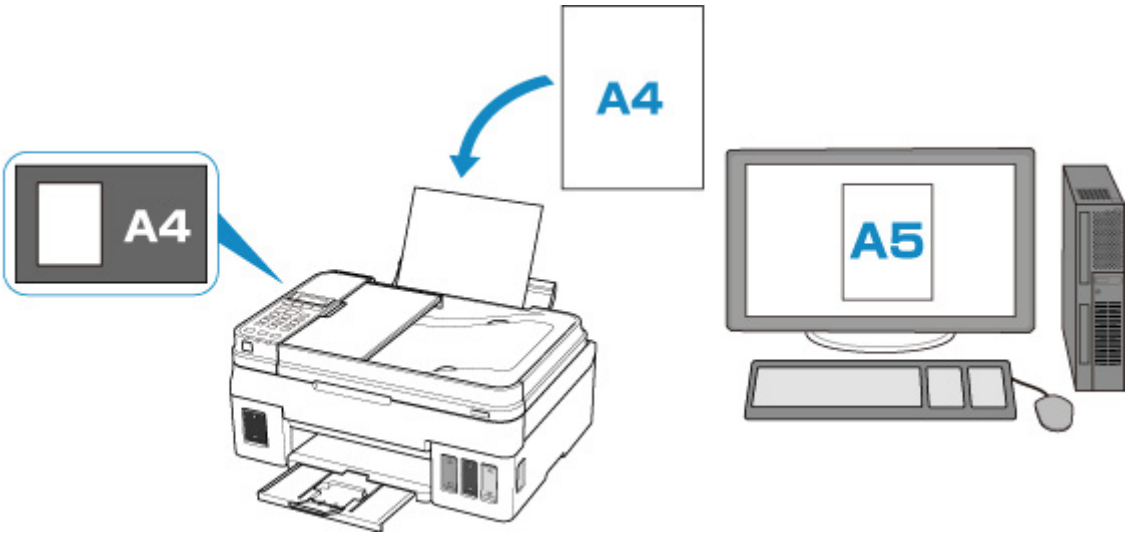

When you start printing/copying, **The size/type of loaded paper is different from the print settings** appears on the LCD.

When you press the **OK** button, the screen for selecting the processing method is displayed. Please choose one of the following.

Note

- Depending on the setting, the choices below may not be displayed.

Use rear tray set.

Select if you want to print on the paper loaded without changing the paper settings.

For example, when the paper size setting for printing/copying is A5 and the paper information registered in the printer is A4, the printer starts printing/copying on the paper loaded on the rear tray without changing the paper size setting for printing/copying.

Replace the paper

Select if you want to print after replacing the paper of the rear tray.

For example, when the paper size setting for printing/copying is A5 and the paper information registered in the printer is A4, you load A5 sized paper before you start printing/copying.

After replacing the paper, register the paper information according to the loaded paper.

Note

- For more on the proper combination of paper settings you can specify by the printer driver for Windows and on the LCD:

  - Paper Settings on the Printer Driver and the Printer (Media Type)
  - Paper Settings on the Printer Driver and the Printer (Paper Size)

Cancel

Cancels printing.

Select when you change the paper settings specified for printing/copying. Change the paper settings and try printing/copying again.

Default Setting for Displaying the Message which Prevents Misprinting

- **When you print/copy using the operation panel of the printer or when you print from smartphone/tablet:**

  The message which prevents misprinting is enabled by default.

  To change the setting:

  Feed settings

- **When you print from Windows:**

  The message which prevents misprinting is disabled by default.

  To change the setting:

  Changing the Printer Operation Mode

- **When you print from macOS:**

  The message which prevents misprinting is enabled by default.

  To change the setting:

  Changing the Printer Operation Mode

Important

- When the message which prevents misprinting is disabled:

  The printer starts printing/copying even though the paper settings for printing/copying and the paper information registered in the printer are different.

Copying

Making Copies Basics

Reducing/Enlarging Copies

Collated Copying

Special Copy Menu

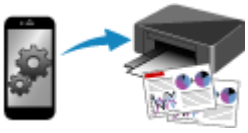

Copying Using Smartphone or Tablet

Making Copies

This section describes the basic procedure to perform standard copying.

1. Make sure that printer is turned on.

2. Load paper.

3. Press the **COPY** button.

   The Copy standby screen is displayed.

4. Load the original document on the platen glass or in the ADF.

5. Confirm the page size and magnification.

   1. Magnification
   2. Page size

Note

- To change or confirm the page size, magnification, or other settings, press the **Menu** button, then use the ◄► button to display the desired setting item.

  Setting Items for Copying

- Press the **COPY** button to reset the magnification to 100%.

6. Use the ◄► button or the Numeric buttons to specify the number of copies.

7. Press the **Color** button for color copying, or the **Black** button for black & white copying.

   The printer starts copying.

   Remove the original on the platen glass or from the document output slot after copying is complete.

Important

- If you load the original on the platen glass, do not open the document cover or remove the original while **Scanning...** is displayed on the screen.
- If you load the original in the ADF, do not move the original until copying is complete.

Note

- To cancel copying, press the **Stop** button.
- If you load the original on the platen glass, you can add the copying job while printing.

  Adding the Copying Job (Reserve copy)

Adding the Copying Job (Reserve copy)

If you load the original on the platen glass, you can add the copying job while printing (Reserve copy).

The screen like shown below is displayed when you can reserve copy.

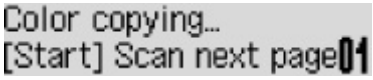

Load the original on the platen glass and press the same button (the **Color** button or the **Black** button) as the one which you previously pressed.

Important

- When you load the original on the platen glass, move the document cover gently.

Note

- When **Print quality** is set **High**, or you load the original in the ADF, you cannot add the copying job.
- When you add the copying job, the number of copies or the settings such as the page size or media type cannot be changed.
- If you press the **Stop** button while reserve copying is in progress, the screen to select the method to cancel copying is displayed. If you select **Cancel all reserv.** then press the **OK** button, you can cancel copying all scanned data. If you select **Cancel last reserv.** then press the **OK** button, you can cancel the last copying job.
- If you set a document of too many pages to reserve copy, **Memory is full** may appears on the LCD. Press the **OK** button and wait a while, then try copying again.
- If **Try again** appears on the LCD when scanning, press the **OK** button, then press the **Stop** button to cancel copying. After that, copy the documents that have not been finished copying.

Setting Items for Copying

You can change the copy settings such as the page size, media type, and intensity.

In the copy mode, press the **Menu** button, use the ◄► button to select a setting item, then press the **OK** button.

Use the ◄► button to adjust each setting item, then press the **OK** button. The next setting item is displayed.

The LCD returns to the Copy standby screen when all the settings are complete.

Note

- The * (asterisk) on the LCD indicates the current setting.
- Some settings cannot be specified in combination with the setting of other setting items or the copy menu.
- The settings of the page size, media type, etc. are retained even if the printer is turned off.

- **Enlarge/Reduce**

  Select the reduction/enlargement method.

  Reducing/Enlarging Copies

  Ex:

  ```
  Enlarge/Reduce
        Preset ratio      ►
  ```

  ### Note

  - This setting item is displayed under the following conditions.
    - When standard copying is selected
    - When **Borderless copy** is selected for **Special copy**

- **Copy intensity**

  Change the intensity.

  Ex:

  ```
  Copy intensity
  ◄     *Manual adjust
  ```

  ### Note

  - If you select **Auto adjust**, load the original on the platen glass.
  - If you select **Manual adjust**, use the ◄ button to decrease the intensity or the ► button to increase it.

- **Page size**

  Select the page size of the loaded paper.

  Ex:

```
Page size
◀        *A4        ▶
```

Note

- Some of setting items are not available depending on the country or region of purchase.

- **Media type**

  Select the media type of the loaded paper.

  Ex:

```
Media type
     *Plain paper     ▶
```

- **Print quality**

  Select the print quality according to the original.

  Ex:

```
Print quality
◀     *Standard     ▶
```

Note

- If you use **Draft** with the media type set to **Plain paper** and the quality is not as good as expected, select **Standard** or **High** and try copying again.
- Select **High** to copy in grayscale. Grayscale renders tones in a range of grays instead of black or white.

- **4-on-1 layout**

  Select the layout when copying four original pages onto a single sheet of paper by reducing each image. Four different layouts are available.

  Ex:

```
4-on-1 layout
     *Layout 1     ▶
```

Note

- This setting item is displayed only when **4-on-1 copy** is selected for **Special copy**.

  ■ Copying Four Pages onto Single Page

- **Collate**

  Select whether to obtain sorted printouts when making multiple copies of a multi-paged original.

  ■ Collated Copying

  Ex:

```
Collate
◀        *OFF
```

Note

- This setting item is displayed when standard copying is selected.

Scanning

Scanning from Computer (Windows)

Scanning from Computer (macOS)

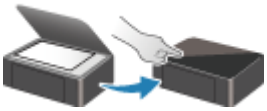

Scanning from Operation Panel

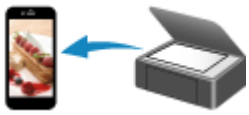

Scanning Using Smartphone/Tablet

Scanning from Computer (Windows)

- **Scanning According to Item Type or Purpose (IJ Scan Utility)**
  - IJ Scan Utility Features
  - Scanning Easily (Auto Scan) **Basics**
  - Scanning Documents and Photos
- **Scanning Using Application Software (ScanGear)**
- **Scanning Tips**
  - Positioning Originals (Scanning from Computer)
  - Network Scan Settings
    - IJ Network Scanner Selector EX2 Menu and Setting Screen

Scanning According to Item Type or Purpose (IJ Scan Utility)

- IJ Scan Utility Features
- Scanning Easily (Auto Scan) Basics
- Scanning Documents and Photos

IJ Scan Utility Features

Use IJ Scan Utility to scan and save documents, photos, or other items at one time by simply clicking the corresponding icon.

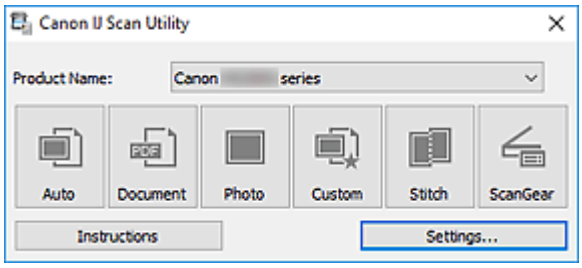

Multiple Scanning Modes

Auto allows for one click scanning with default settings for various items. **Document** will sharpen text in a document or magazine for better readability, and **Photo** is best suited for scanning photos.

Note

- For details on the IJ Scan Utility main screen, see IJ Scan Utility Main Screen.

Save Scanned Images Automatically

Scanned images are automatically saved to a preset folder. The folder can be changed as needed.

Note

- The default save folders are as follows.
  - **Windows 10/Windows 8.1:**

    Documents folder
  - **Windows 7:**

    My Documents folder
- To change folder, see Settings Dialog Box.

Application Integration

Scanned images can be sent to other applications. For example, display scanned images in your favorite graphics application, attach them to e-mails, or extract text from images.

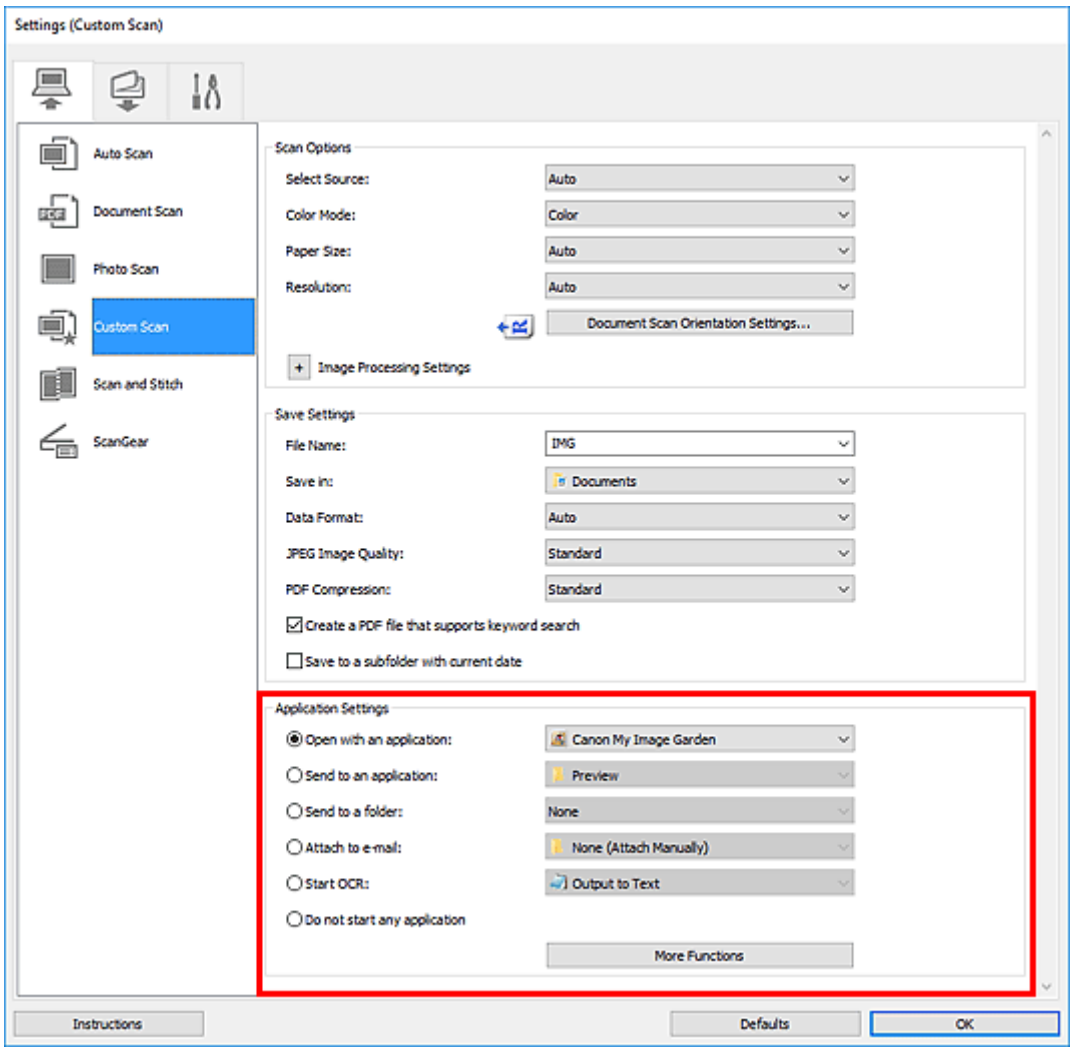

Note

- To set the applications to integrate with, see Settings Dialog Box.

Scanning Easily (Auto Scan)

Auto Scan allows for automatic detection of the type of the item placed on the platen or ADF (Auto Document Feeder).

Important

- The following types of items may not be scanned correctly. In that case, adjust the cropping frames (scan areas) in whole image view of ScanGear (scanner driver), and then scan again.
  - Photos with a whitish background
  - Items printed on white paper, hand-written text, business cards, and other unclear items
  - Thin items
  - Thick items
- When scanning two or more documents from the ADF, place documents of the same size.

1. Make sure scanner or printer is turned on.

2. Place items on platen or ADF.

   Positioning Originals (Scanning from Computer)

3. Start IJ Scan Utility.

4. Click **Auto**.

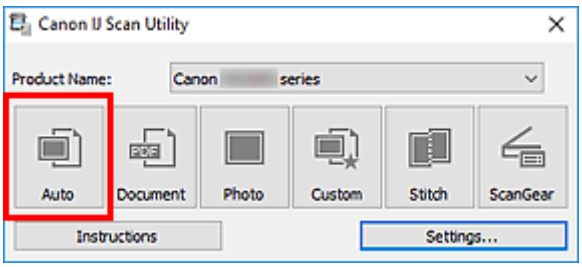

   Scanning starts.

Note

- To cancel the scan, click **Cancel**.
- Use the **Settings (Auto Scan)** dialog box to set where to save the scanned images and to make advanced scan settings.
- To scan a specific item type, see the following pages.

  Scanning Documents and Photos
  Scanning with Favorite Settings
  Scanning Multiple Documents at One Time from the ADF (Auto Document Feeder)

Scanning Documents and Photos

Scan items placed on the platen with settings suitable for documents or photos.

Save documents in formats such as PDF and JPEG, and photos in formats such as JPEG and TIFF.

1. Place the item on the platen.

   Positioning Originals (Scanning from Computer)

2. Start IJ Scan Utility.

3. To specify the paper size, resolution, PDF settings, etc., click **Settings...**, and then set each item in the Settings dialog box.

   Note

   - Once settings are made in the Settings dialog box, the same settings can be used for scanning from the next time.
   - In the Settings dialog box, specify image processing settings such as slant correction and outline emphasis, set the destination of the scanned images, and more, as needed.

   When setting is completed, click **OK**.

4. Click **Document** or **Photo**.

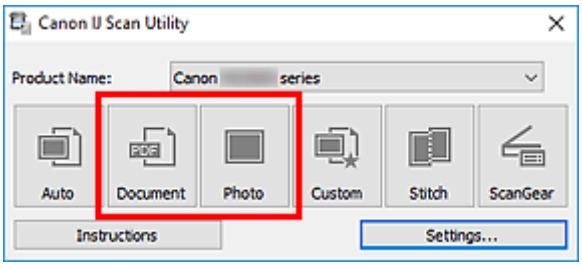

   Scanning starts.

Note

- To cancel the scan, click **Cancel**.

Scanning Using Application Software (ScanGear)

- What Is ScanGear (Scanner Driver)?
- Starting ScanGear (Scanner Driver)
- Scanning in Basic Mode
- ScanGear (Scanner Driver) Screens
- General Notes (Scanner Driver)

Important

- Available functions and settings vary depending on your scanner or printer.

What Is ScanGear (Scanner Driver)?

ScanGear (scanner driver) is software required for scanning documents. Use the software to specify the output size, image corrections, and other settings.

ScanGear can be started from IJ Scan Utility or applications that are compatible with the standard TWAIN interface. (ScanGear is a TWAIN-compatible driver.)

Features

Specify the document type, output size, and other settings when scanning documents and preview scan results. Make various correction settings or finely adjust the brightness, contrast, and other parameters to scan in a specific color tone.

Screens

There are two modes: Basic Mode and Advanced Mode.

Switch modes with the tabs on the upper right of the screen.

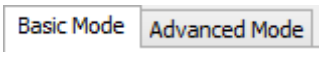

Note

- ScanGear starts in the last used mode.
- Settings are not retained when you switch modes.

Basic Mode

Use the **Basic Mode** tab to scan easily by following three simple on-screen steps (1, 2, and 3).

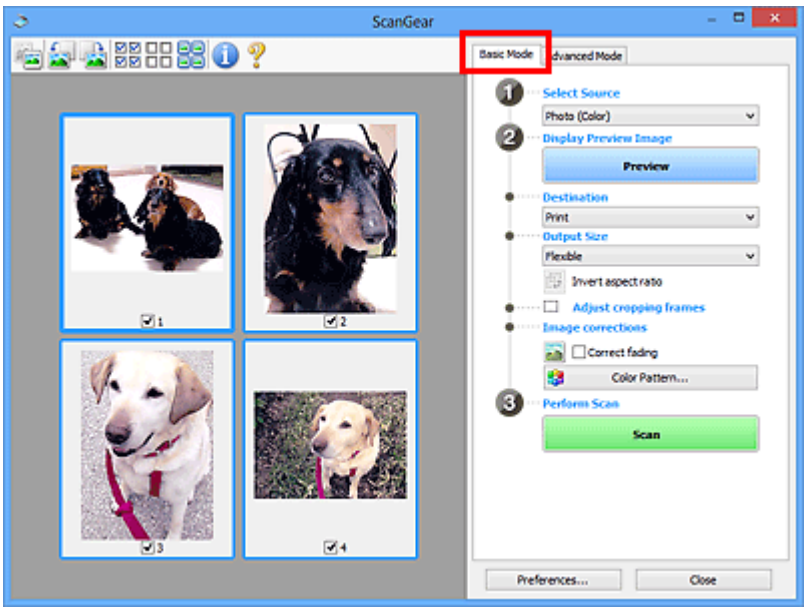

Advanced Mode

Use the **Advanced Mode** tab to scan by specifying the color mode, output resolution, image brightness, color tone, and other settings.

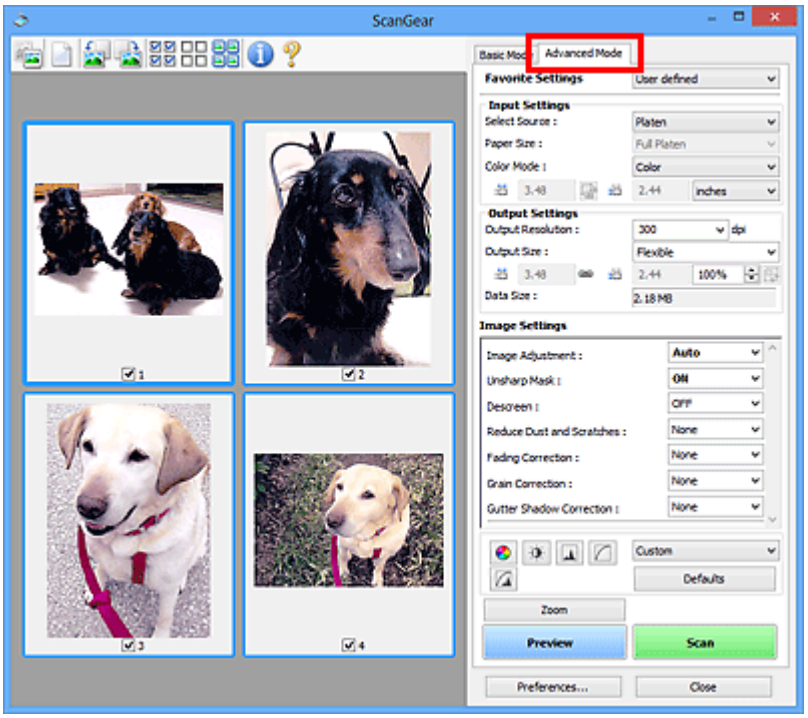

Starting ScanGear (Scanner Driver)

Use ScanGear (scanner driver) to make image corrections and color adjustments when scanning. Start ScanGear from IJ Scan Utility or other applications.

Note

- If you have more than one scanner or have a network compatible model and changed the connection from USB connection to network connection, set up the network environment.

Starting from IJ Scan Utility

1. Start IJ Scan Utility.

   For details, click Home to return to the top page of the Online Manual for your model and search for "Starting IJ Scan Utility."

2. In IJ Scan Utility main screen, click ScanGear.

   The ScanGear screen appears.

Starting from Application

The procedure varies depending on the application. For details, see the application's manual.

1. Start application.

2. On application's menu, select machine.

   Note

   - A machine connected over a network, will have "Network" displayed after the product name.

3. Scan document.

   The ScanGear screen appears.

Scanning in Basic Mode

Use the **Basic Mode** tab to scan easily by following these simple on-screen steps.

To scan multiple documents at one time from the Platen, see Scanning Multiple Documents at One Time with ScanGear (Scanner Driver).

When scanning from the ADF (Auto Document Feeder), preview is not available.

Important

- The following types of documents may not be scanned correctly. In that case, click (Thumbnail) on the Toolbar to switch to whole image view and scan.
  - Photos with a whitish background
  - Documents printed on white paper, hand-written text, business cards, and other unclear documents
  - Thin documents
  - Thick documents
- The following types of documents cannot be scanned correctly.
  - Documents smaller than 1.2 inches (3 cm) square
  - Photos that have been cut to irregular shapes

Note

- Both sides of a two sided document can be scanned simultaneously on models with ADF duplex scanning support.

1. Place document on machine's Platen or ADF, and then start ScanGear (scanner driver).

   - Positioning Originals (Scanning from Computer)
   - Starting ScanGear (Scanner Driver)

2. Set **Select Source** to match your document.

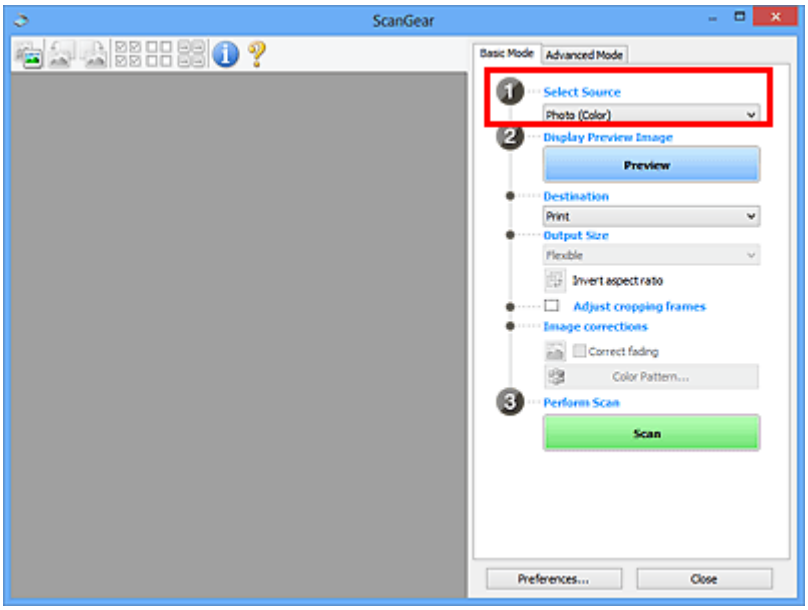

Important

- Some applications do not support continuous scanning from the ADF. For details, see the application's manual.

Note

- To scan magazines containing many color photos, select **Magazine (Color)**.

3. Click **Preview**.

Preview image appears in the Preview area.

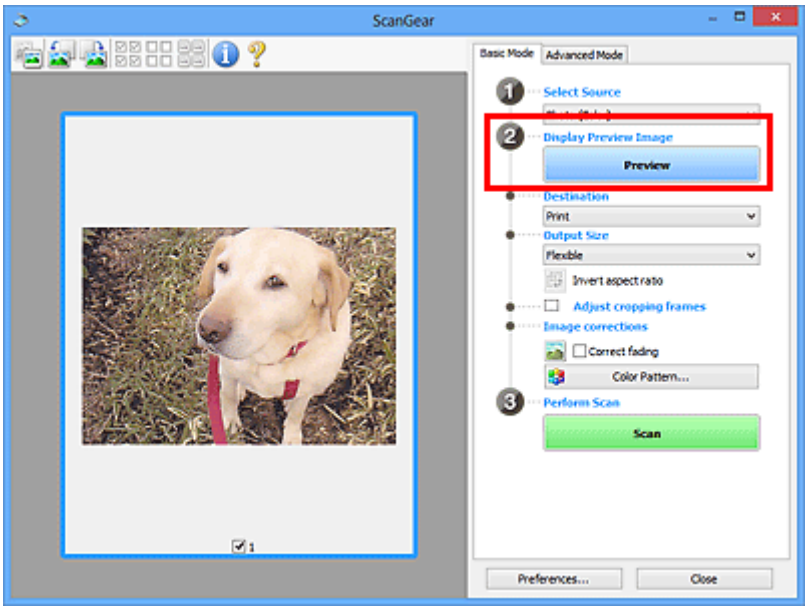

Important

- **Preview** is not available when scanning from the ADF.

Note

- Colors are adjusted based on the document type selected in **Select Source**.

4. Set **Destination**.

Note

- Skip ahead to Step 7 if an ADF option is selected in **Select Source**.

5. Set **Output Size**.

Output size options vary with the selected **Destination**.

6. Adjust cropping frames (scan areas) as needed.

Adjust the size and position of the cropping frames on the preview image.

■ Adjusting Cropping Frames (ScanGear)

7. Set **Image corrections** as needed.

8. Click **Scan**.

   Scanning starts.

Note

- Click (Information) to display a dialog box showing the document type and other details of the current scan settings.
- How ScanGear behaves after scanning is complete can be set from **Status of ScanGear dialog after scanning** on the **Scan** tab of the **Preferences** dialog box.

Related Topic

- **Basic Mode** Tab

ScanGear (Scanner Driver) Screens

- Basic Mode Tab
- Advanced Mode Tab

Basic Mode Tab

Use the **Basic Mode** tab to scan easily by following these simple on-screen steps.

This section describes the settings and functions available on the **Basic Mode** tab.

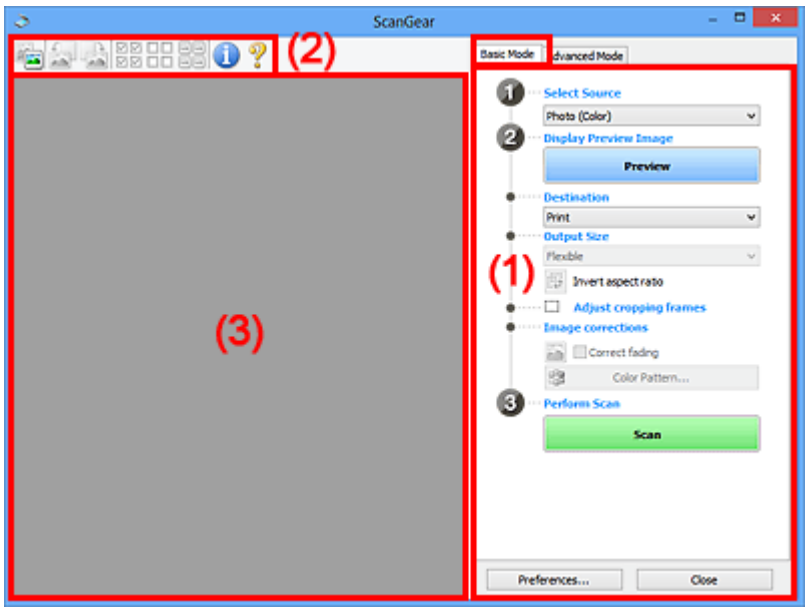

- (1) Settings and Operation Buttons
- (2) Toolbar
- (3) Preview Area

Note

- The displayed items vary by document type and view.
- Preview is not available when scanning from the ADF (Auto Document Feeder).

(1) Settings and Operation Buttons

Select Source

Photo (Color)

Scan color photos.

Magazine (Color)

Scan color magazines.

Document (Color)

Scan documents in color.

Document (Grayscale)

Scan documents in black and white.

Document (Color) ADF Simplex

Scan documents from the ADF in color.

Document (Grayscale) ADF Simplex

Scan documents from the ADF in black and white.

Document (Color) ADF Duplex (only for models supporting ADF duplex scanning)

Scan both sides of documents from the ADF in color.

Document (Grayscale) ADF Duplex (only for models supporting ADF duplex scanning)

Scan both sides of documents from the ADF in black and white.

Important

- Some applications do not support continuous scanning from the ADF. For details, see the application's manual.

Note

- When you select a document type, the unsharp mask function will be active.
- When you select an option other than the ADF types, the image adjustment function which adjusts images based on the document type will also be active.
- When you select **Magazine (Color)**, the descreen function will be active.

Display Preview Image

Preview

Performs a trial scan.

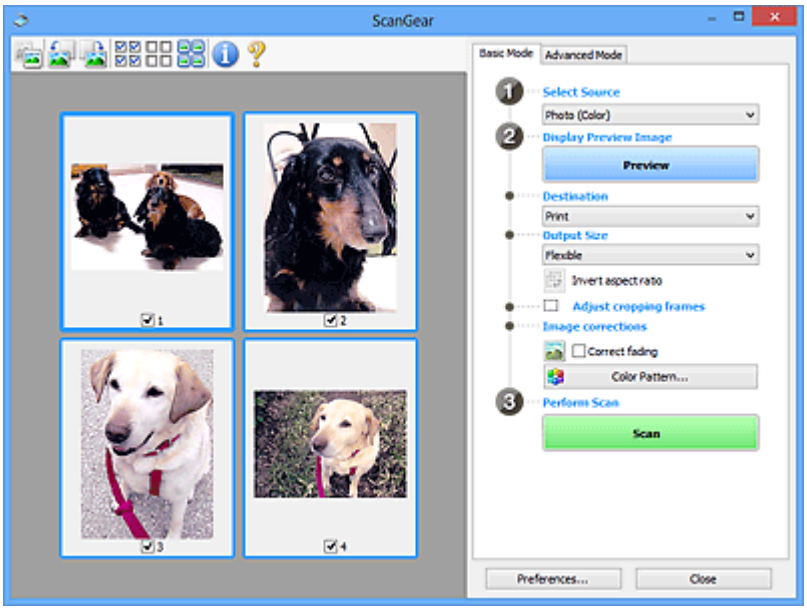

Note

- When using the machine for the first time, scanner calibration starts automatically. Wait a while until the preview image appears.

Destination

Select what you want to do with the scanned image.

Print

Select this to print the scanned image on a printer.

Image display

Select this to view the scanned image on a monitor.

OCR

Select this to use the scanned image with OCR software.

"OCR software" is software that converts text scanned as an image into text data that can be edited in word processors and other programs.

Output Size

Select an output size.

Output size options vary by the item selected in **Destination**.

Flexible

Adjust the cropping frames (scan areas) freely.

In thumbnail view:

Drag the mouse over a thumbnail to display a cropping frame. When a cropping frame is displayed, the portion within the cropping frame will be scanned. When no cropping frame is displayed, each frame is scanned individually.

In whole image view:

When no cropping frame is displayed, the entire Preview area will be scanned. When a cropping frame is displayed, the portion within the cropping frame will be scanned.

Paper Size (such as L or A4)

Select an output paper size. The portion within the cropping frame will be scanned at the size of the selected paper size. Drag the cropping frame to enlarge/reduce it while maintaining the aspect ratio.

Monitor Size (such as 1024 x 768 pixels)

Select an output size in pixels. A cropping frame of the selected monitor size will appear and the portion within the cropping frame will be scanned. Drag the cropping frame to enlarge/reduce it while maintaining the aspect ratio.

Add/Delete...

Displays the **Add/Delete the Output Size** dialog box for specifying custom output sizes. This option can be selected when **Destination** is **Print** or **Image display**.

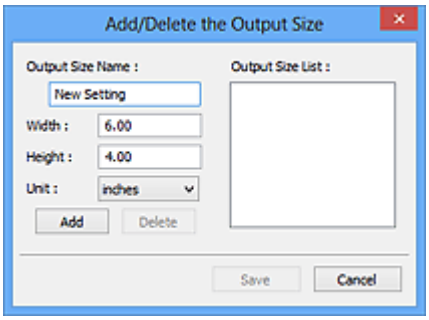

In the **Add/Delete the Output Size** dialog box, multiple output sizes can be specified and then saved at one time. Saved items will be registered to the **Output Size** list and can be selected, along with the predefined items.

Adding:

Enter **Output Size Name**, **Width**, and **Height**, and then click **Add**. For **Unit**, select **inches** or **mm** if **Destination** is **Print**; if it is **Image display**, only **pixels** can be selected. The name of the added size appears in **Output Size List**. Click **Save** to save the items listed in **Output Size List**.

Deleting:

Select the output size you want to delete in **Output Size List**, and then click **Delete**. Click **Save** to save the items listed in **Output Size List**.

Important

- Predefined output sizes such as **A4** and **1024 x 768 pixels** cannot be deleted.

Note

- Save up to 10 items.
- An error message appears when you enter a value outside the setting range. Enter a value within the setting range.

Note

- For details on whether or how the cropping frame initially appears on a preview image, see **Cropping Frame on Previewed Images** in **Preview** Tab of the **Preferences** dialog box.

Invert aspect ratio

Available when **Output Size** is set to anything but **Flexible**.

Click this button to rotate the cropping frame. Click again to return it to the original orientation.

Adjust cropping frames

Adjust the scan area within the Preview area.

If an area is not specified, the document will be scanned at the document size (Auto Crop). If an area is specified, only the portion in the cropping frame will be scanned.

Adjusting Cropping Frames (ScanGear)

Image corrections

Correct the image to be scanned.

Important

- **Apply Auto Document Fix** and **Correct fading** are available when **Recommended** is selected on the **Color Settings** tab of the **Preferences** dialog box.

Note

- Available functions vary by the document type selected in **Select Source**.

Apply Auto Document Fix

Sharpens text in a document or magazine for better readability.

Important

- Scanning may take longer than usual when this checkbox is selected.
- The color tone may change from the source image due to corrections. In that case, deselect the checkbox and scan.
- Correction may not be applied properly if the scan area is too small.

Correct fading

Corrects photos that have faded with time or have a colorcast.

Reduce gutter shadow

Corrects shadows that appear between pages when scanning open booklets.

Important

- Be sure to see **Gutter Shadow Correction** for precautions and other information on using this function.

Color Pattern...

Adjust the image's overall color. Correct colors that have faded due to colorcast or other reasons and reproduce natural colors while previewing color changes.

Adjusting Colors Using a Color Pattern

Important

- This setting is not available when **Color Matching** is selected on the **Color Settings** tab of the **Preferences** dialog box.

Perform Scan

Scan

Starts scanning.

Note

- When scanning starts, the progress appears. To cancel the scan, click **Cancel**.

Preferences...

Displays the **Preferences** dialog box for making scan/preview settings.

Close

Closes ScanGear (scanner driver).

(2) Toolbar

Adjust or rotate preview images. The buttons displayed on the Toolbar vary by view.

In thumbnail view:

In whole image view:

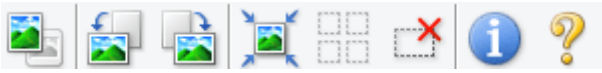

(Thumbnail) / **(Whole Image)**

Switches the view in the Preview area.

(3) Preview Area

(Rotate Left)

Rotates the preview image 90 degrees counter-clockwise.

- The result will be reflected in the scanned image.
- The image returns to its original state when you preview again.

(Rotate Right)

Rotates the preview image 90 degrees clockwise.

- The result will be reflected in the scanned image.
- The image returns to its original state when you preview again.

(Auto Crop)

Displays and adjusts the cropping frame automatically to the size of the document displayed in the Preview area. The scan area is reduced every time you click this button if there are croppable areas within the cropping frame.

(Check All Frames)

Available when two or more frames are displayed.

Selects the checkboxes of the images in thumbnail view.

(Uncheck All Frames)

Available when two or more frames are displayed.

Deselects the checkboxes of the images in thumbnail view.

(Select All Frames)

Available when two or more frames are displayed.

Selects the images in thumbnail view and outlines them in blue.

(Select All Cropping Frames)

Available when two or more cropping frames are specified.

Turns the cropping frames into thick broken lines and applies the settings to all of them.

(Remove Cropping Frame)

Removes the selected cropping frame.

(Information)

Displays the version of ScanGear, along with the document type and other details of the current scan settings.

(Open Guide)

Opens this page.

(3) Preview Area

This is where a trial image appears after you click **Preview**. The results of image corrections, color adjustments, and other settings made in (1) Settings and Operation Buttons are also reflected.

When (Thumbnail) is displayed on Toolbar:

Cropping frames are specified according to the document size, and thumbnails of scanned images appear. Only the images with the checkbox selected will be scanned.

Note

- When multiple images are previewed, different outlines indicate different selection status.
  - Focus Frame (thick blue outline): The displayed settings will be applied.
  - Selected Frame (thin blue outline): The settings will be applied to the Focus Frame and Selected Frames simultaneously. To select multiple images, click them while pressing the Ctrl key.
  - Unselected (no outline): The settings will not be applied.
- Double-click a frame to enlarge the image. Click (Frame Advance) at the bottom of the screen to display the previous or next frame. Double-click the enlarged frame again to return it to its original state.

When (Whole Image) is displayed on Toolbar:

Items on the Platen are scanned and appear as a single image. All portions in the cropping frames will be scanned.

Note

- Create cropping frame(s) on the displayed image. In thumbnail view, one cropping frame can be created per image. In whole image view, multiple cropping frames can be created.

  Adjusting Cropping Frames (ScanGear)

Related Topic

Scanning in Basic Mode

Advanced Mode Tab

This mode allows you to make advanced scan settings such as the color mode, output resolution, image brightness, and color tone.

This section describes the settings and functions available on the **Advanced Mode** tab.

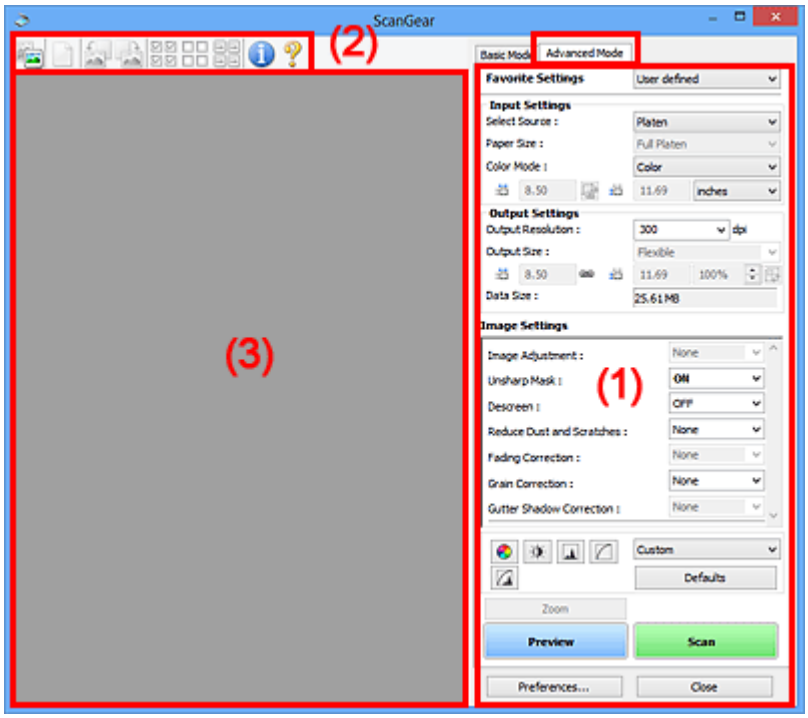

- (1) Settings and Operation Buttons
- (2) Toolbar
- (3) Preview Area

Note

- The displayed items vary by document type and view.
- The preview function is not available when scanning from the ADF (Auto Document Feeder).

(1) Settings and Operation Buttons

Favorite Settings

You can name and save a group of settings (Input Settings, Output Settings, Image Settings, and Color Adjustment Buttons) on the **Advanced Mode** tab, and load it as required. It is convenient to save a group of settings if you will be using it repeatedly. You can also use this to reload the default settings.

Select **Add/Delete...** from the pull-down menu to open the **Add/Delete Favorite Settings** dialog box.

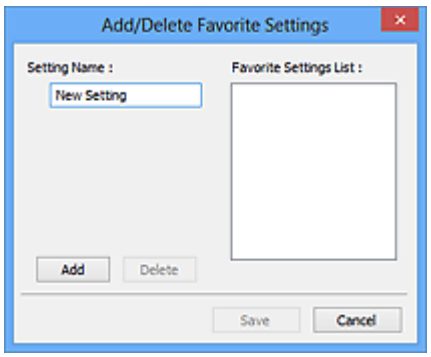

Enter **Setting Name** and click **Add**; the name appears in **Favorite Settings List**.

When you click **Save**, the item appears in the **Favorite Settings** list and can be selected, along with the predefined items.

To delete an item, select it in **Favorite Settings List** and click **Delete**. Click **Save** to save the settings displayed in **Favorite Settings List**.

Note

- You can set **Add/Delete...** in **Favorite Settings** after preview.
- Save up to 10 items.

Input Settings

Specify the input settings such as the document type and size.

Output Settings

Specify the output settings such as the output resolution and size.

Image Settings

Enable/disable various image correction functions.

Color Adjustment Buttons

Fine corrections to the image brightness and color tones can be made including adjustments to the image's overall brightness or contrast and adjustments to its highlight and shadow values (histogram) or balance (tone curve).

Zoom

Zooms in on a frame, or zooms in on the image in the area specified with a cropping frame (scan area). When zoomed in, **Zoom** changes to **Undo**. Click **Undo** to return the display to its non-magnified state.

In thumbnail view:

When multiple images are displayed in thumbnail view, clicking this button zooms in on the selected frame. Click (Frame Advance) at the bottom of the screen to display the previous or next frame.

Note

- You can also zoom in on an image by double-clicking the frame. Double-click the enlarged frame again to return it to its original state.

In whole image view:

Rescans the image in the area specified with a cropping frame at higher magnification.

Note

- **Zoom** rescans the document and displays high-resolution image in Preview.
- (Enlarge/Reduce) on the Toolbar zooms in on the preview image quickly. However, the resolution of the displayed image will be low.

Preview

Performs a trial scan.

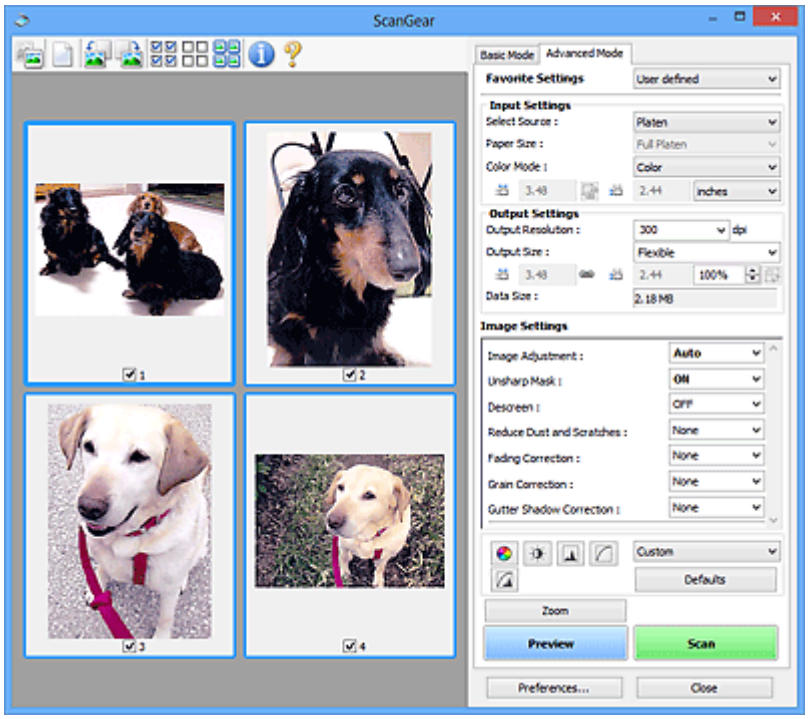

Scan

Starts scanning.

Note

- When scanning starts, the progress appears. To cancel the scan, click **Cancel**.
- When scanning is completed, a dialog box prompting you to select the next action may appear. Follow the prompt to complete. For details, refer to **Status of ScanGear dialog after scanning** in **Scan** Tab (**Preferences** dialog box).
- It will take time to process the images if the total size of the scanned images exceeds a certain size. In that case, a warning message appears; it is recommended that you reduce the total size. To continue, scan in whole image view.

Preferences...

Displays the **Preferences** dialog box for making scan/preview settings.

Close

Closes ScanGear (scanner driver).

(2) Toolbar

Adjust or rotate preview images. The buttons displayed on the Toolbar vary by view.

In thumbnail view:

In whole image view:

(Thumbnail) / (Whole Image)

Switches the view in the Preview area.

(3) Preview Area

(Clear)

Deletes the preview image from the Preview area.

It also resets the Toolbar and color adjustment settings.

(Crop)

Allows you to specify the scan area by dragging the mouse.

(Move Image)

Allows you to drag the image until the part you want to see is displayed when an image enlarged in the Preview area does not fit in the screen. You can also move the image using the scroll bars.

(Enlarge/Reduce)

Allows you to zoom in on the Preview area by clicking the image. Right-click the image to zoom out.

(Rotate Left)

Rotates the preview image 90 degrees counter-clockwise.

- The result will be reflected in the scanned image.
- The image returns to its original state when you preview again.

(Rotate Right)

Rotates the preview image 90 degrees clockwise.

- The result will be reflected in the scanned image.
- The image returns to its original state when you preview again.

(Auto Crop)

Displays and adjusts the cropping frame automatically to the size of the document displayed in the Preview area. The scan area is reduced every time you click this button if there are croppable areas within the cropping frame.

(Check All Frames)

Available when two or more frames are displayed.

Selects the checkboxes of the images in thumbnail view.

(Uncheck All Frames)

Available when two or more frames are displayed.

Deselects the checkboxes of the images in thumbnail view.

(Select All Frames)

Available when two or more frames are displayed.

Selects the images in thumbnail view and outlines them in blue.

(Select All Cropping Frames)

Available when two or more cropping frames are specified.

Turns the cropping frames into thick broken lines and applies the settings to all of them.

(Remove Cropping Frame)

Removes the selected cropping frame.

(Information)

Displays the version of ScanGear, along with the document type and other details of the current scan settings.

(Open Guide)

Opens this page.

(3) Preview Area

This is where a trial image appears after you click **Preview**. The results of image corrections, color adjustments, and other settings made in (1) Settings and Operation Buttons are also reflected.

When (Thumbnail) is displayed on Toolbar:

Cropping frames are specified according to the document size, and thumbnails of scanned images appear. Only the images with the checkbox selected will be scanned.

Note

- When multiple images are previewed, different outlines indicate different selection status.
  - Focus Frame (thick blue outline): The displayed settings will be applied.
  - Selected Frame (thin blue outline): The settings will be applied to the Focus Frame and Selected Frames simultaneously. To select multiple images, click them while pressing the Ctrl key.
  - Unselected (no outline): The settings will not be applied.

When (Whole Image) is displayed on Toolbar:

Items on the Platen are scanned and appear as a single image. All portions in the cropping frames will be scanned.

Note

- Create cropping frame(s) on the displayed image. In thumbnail view, one cropping frame can be created per image. In whole image view, multiple cropping frames can be created.

  Adjusting Cropping Frames (ScanGear)

Related Topic

- Scanning in Advanced Mode
- Scanning Multiple Documents from the ADF (Auto Document Feeder) in Advanced Mode

General Notes (Scanner Driver)

ScanGear (scanner driver) is subject to the following restrictions. Keep these points in mind when using it.

Scanner Driver Restrictions

- When using the NTFS file system, the TWAIN data source may not be invoked. This is because the TWAIN module cannot be written to the winnt folder for security reasons. Contact the computer's administrator for help.
- Some computers (including laptops) connected to the machine may not resume correctly from standby mode. In that case, restart the computer.
- Do not connect two or more scanners or multifunction printers with scanner function to the same computer simultaneously. If multiple scanning devices are connected, you cannot scan from the operation panel of the machine and also may experience errors while accessing the devices.
- Scanning may fail if the computer has resumed from sleep or standby mode. In that case, follow these steps and scan again.
  1. Turn off the machine.
  2. Exit ScanGear, then disconnect the USB cable from the computer and reconnect it.
  3. Turn on the machine.
- ScanGear cannot be opened in multiple applications at the same time. Within an application, ScanGear cannot be opened for the second time when it is already open.
- Be sure to close the ScanGear window before closing the application.
- When using a network compatible model by connecting to a network, the machine cannot be accessed from multiple computers at the same time.
- When using a network compatible model by connecting to a network, scanning takes longer than usual.
- Make sure that you have adequate disk space available when scanning large images at high resolutions. For example, at least 300 MB of free space is required to scan an A4 document at 600 dpi in full-color.
- ScanGear and WIA driver cannot be used at the same time.
- Do not enter the computer into sleep or hibernate state during scanning.

Applications with Restrictions on Use

- Some applications may not display the TWAIN user interface. In that case, refer to the application's manual and change the settings accordingly.
- Some applications do not support continuous scanning of multiple documents. In some cases, only the first scanned image is accepted, or multiple images are scanned as one image. For such applications, do not scan multiple documents from the ADF (Auto Document Feeder).
- To import scanned images into Microsoft Office 2000, first save them using IJ Scan Utility, then import the saved files from the **Insert** menu.
- When scanning Platen size images into Microsoft Office 2003 (Word, Excel, PowerPoint, etc.), click **Custom Insert** in the **Insert Picture from Scanner or Camera** screen. Otherwise, images may not be scanned correctly.
- When scanning images into Microsoft Office 2007/Microsoft Office 2010 (Word, Excel, PowerPoint, etc.), use Microsoft Clip Organizer.

- Images may not be scanned correctly in some applications. In that case, increase the operating system's virtual memory and retry.
- When image size is too large (such as when scanning large images at high resolution), your computer may not respond or the progress bar may remain at 0 % depending on the application. In that case, cancel the action (for example by clicking **Cancel** on the progress bar), then increase the operating system's virtual memory or reduce the image size/resolution and retry. Alternatively, scan the image via IJ Scan Utility first, then save and import it into the application.

Scanning Tips

- **Positioning Originals (Scanning from Computer)**
- **Network Scan Settings**
  - IJ Network Scanner Selector EX2 Menu and Setting Screen

Positioning Originals (Scanning from Computer)

This section describes how to load originals on the platen or ADF (Auto Document Feeder) for scanning. If items are not placed correctly they may not be scanned correctly.

Important

- Do not place objects on the document cover. When you open the document cover, the objects may fall into your scanner or printer, resulting in malfunction.
- Close the document cover when scanning.
- Do not touch the operation panel buttons or LCD (Liquid Crystal Display) when opening/closing the document cover. May result in unintended operation.

- Placing Items (Platen)
- Placing Documents (ADF (Auto Document Feeder))

Placing Items (Platen)

Place items as described below to scan by detecting the item type and size automatically.

Important

- When scanning by specifying the paper size in IJ Scan Utility or ScanGear (scanner driver), align an upper corner of the item with the corner at the arrow (alignment mark) of the platen.
- Photos that have been cut to irregular shapes and items smaller than 1.2 inches (3 cm) square cannot be cropped accurately when scanning.
- Reflective disc labels may not be scanned as expected.

Photos, Postcards, Business Cards, and BD/DVD/CD	Magazines, Newspapers, and Documents
 Single item: Place the item face-down on the platen, with 0.4 inch (1 cm) or more space between the edges (diagonally striped area) of the platen and the item. Portions placed on the diagonally striped area cannot be scanned. 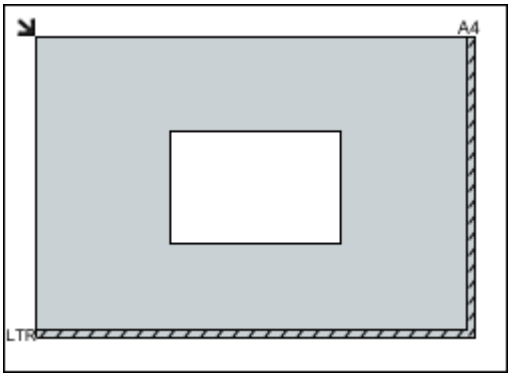 	 Place the item face-down on the platen and align an upper corner of the item with the corner at the arrow (alignment mark) of the platen. Portions placed on the diagonally striped area cannot be scanned. 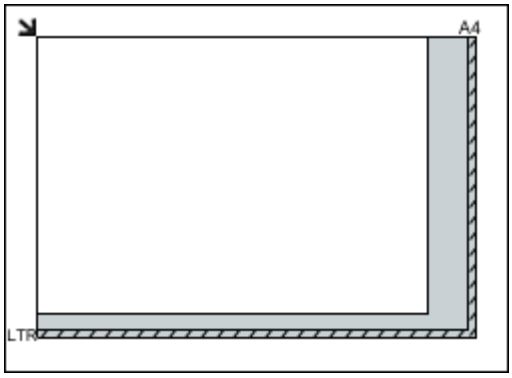

Important

- Large items (such as A4 size photos) that cannot be placed away from the edges/arrow (alignment mark) of the platen may be saved as PDF files. To save in a format other than PDF, scan by specifying the data format.

Multiple items:

Allow 0.4 inch (1 cm) or more space between the edges (diagonally striped area) of the platen and items, and between items. Portions placed on the diagonally striped area cannot be scanned.

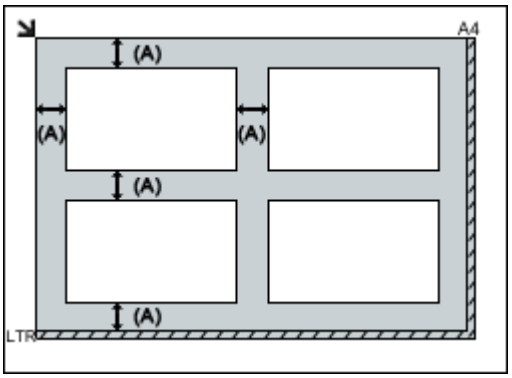

(A) 0.4 inch (1 cm) or more

Note

- Place up to 12 items.
- Positions of slanted items (10 degrees or less) are corrected automatically.

Important

- For the portions in which items cannot be scanned, see Loading Originals.

Placing Documents (ADF (Auto Document Feeder))

Important

- Do not leave thick items on the platen when scanning from the ADF. May result in paper jam.
- Place and align documents of the same size when scanning two or more documents.
- For supported document sizes when scanning from the ADF, see Supported Originals.

1. Open document tray.

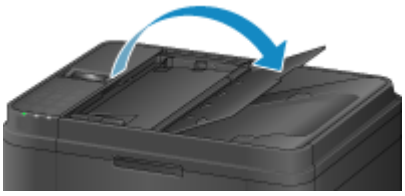

2. Place documents on ADF, and then adjust document guides to width of documents.

   Insert the documents face-up until a beep sounds.

AB

Network Scan Settings

You can connect your scanner or printer to a network to share it among multiple computers or scan images into a specified computer.

Important

- Multiple users cannot scan at the same time.

Note

- Complete the network settings of your scanner or printer beforehand from the Setup CD-ROM or by following the instructions our website.
- With network connection, scanning takes longer than USB connection.

Complete the following settings to enable scanning over a network.

Specifying Your Scanner or Printer

Use IJ Network Scanner Selector EX to specify the scanner you want to use. By specifying the scanner, you can scan over a network from your computer or the operation panel.

Important

- If the product you want to use is changed with IJ Network Scanner Selector EX, the product used for scanning with IJ Scan Utility changes as well. The product for scanning from the operation panel also changes.

  If your scanner or printer is not selected in IJ Scan Utility, check that it is selected with IJ Network Scanner Selector EX.

  Refer to "IJ Network Scanner Selector EX2 Menu and Setting Screen" for your model from Home of the Online Manual for details.
- To scan from the operation panel, specify your scanner or printer with IJ Network Scanner Selector EX beforehand.

1. Check that IJ Network Scanner Selector EX is running.

   If IJ Network Scanner Selector EX is running, (IJ Network Scanner Selector EX2) appears in the notification area on the desktop. Click to check the hidden icons as well.

   Note

   - If the icon is not displayed in the notification area on the desktop, follow the procedure below to start.
     - **Windows 10:**

       From the **Start** menu, click **All apps** > **Canon Utilities** > **IJ Network Scanner Selector EX2**.
     - **Windows 8.1:**

       Click **IJ Network Scanner Selector EX2** on the Start screen.

If **IJ Network Scanner Selector EX2** is not displayed on the Start screen, select the **Search** charm, then search for "IJ Network Scanner Selector EX".

- **Windows 7:**

  From the **Start** menu, click **All Programs** > **Canon Utilities** > **IJ Network Scanner Selector EX2** > **IJ Network Scanner Selector EX2**.

The icon appears in the notification area on the desktop, and the Scan-from-PC Settings screen appears. In that case, skip ahead to Step 3.

2. In the notification area on the desktop, right-click (IJ Network Scanner Selector EX2), then select **Settings...**.

   The Scan-from-PC Settings screen appears.

3. Select your scanner or printer from **Scanners**.

   Normally, the MAC address of your scanner or printer is already selected after the network setup. In that case, you do not need to select it again.

   Important

   - If multiple scanners exist on the network, multiple model names appear. In that case, you can select one scanner per model.

4. Click **OK**.

Note

- The scanner selected in the Scan-from-PC Settings screen will be automatically selected in the Scan-from-Operation-Panel Settings screen as well.

Setting for Scanning with IJ Scan Utility

To scan from IJ Scan Utility using a scanner or printer connected to a network, specify your scanner or printer with IJ Network Scanner Selector EX, then follow the steps below to change the connection status between it and the computer.

1. Start IJ Scan Utility.

2. Select "Canon XXX series Network" (where "XXX" is the model name) for **Product Name**.

3. Click **Settings...** to use another scanner connected to a network.

4. Click (General Settings), then click **Select** in **Product Name**.

   The Scan-from-PC Settings screen of IJ Network Scanner Selector EX appears.

Select the scanner you want to use and click **OK**.

5. In the **Settings (General Settings)** dialog box, click **OK**.

   The IJ Scan Utility main screen reappears. You can scan via a network connection.

Setting for Scanning from the Operation Panel

You can make the setting for scanning from the operation panel.

Important

- Set IJ Scan Utility to use your scanner or printer via a network connection beforehand.

  Setting for Scanning with IJ Scan Utility

1. Check that IJ Network Scanner Selector EX is running.

   If IJ Network Scanner Selector EX is running, (IJ Network Scanner Selector EX2) appears in the notification area on the desktop. Click to check the hidden icons as well.

   ### Note

   - If the icon is not displayed in the notification area on the desktop, follow the procedure below to start.

     - **Windows 10:**

       From the **Start** menu, click **All apps** > **Canon Utilities** > **IJ Network Scanner Selector EX2**.

     - **Windows 8.1:**

       Click **IJ Network Scanner Selector EX2** on the Start screen.

       If **IJ Network Scanner Selector EX2** is not displayed on the Start screen, select the **Search** charm, then search for "IJ Network Scanner Selector EX".

     - **Windows 7:**

       From the **Start** menu, click **All Programs** > **Canon Utilities** > **IJ Network Scanner Selector EX2** > **IJ Network Scanner Selector EX2**.

     The icon appears in the notification area on the desktop, and the Scan-from-PC Settings screen appears. In that case, skip ahead to Step 3.

2. In the notification area on the desktop, right-click (IJ Network Scanner Selector EX2), then select **Settings...**.

   The Scan-from-PC Settings screen appears.

3. Click **Scan-from-Operation-Panel Settings**.

   The Scan-from-Operation-Panel Settings screen appears.

4. Select your scanner or printer from **Scanners** and click **OK**.

   Select the MAC address of your scanner or printer.

   Note

   - When multiple scanners are connected via a network, you can select up to three scanners.

5. In the Scan-from-PC Settings screen, click **OK**.

Note

- If your scanner or printer does not appear, check the following, click **OK** to close the screen, then reopen it and try selecting again.
  - MP Drivers is installed
  - Network settings of your scanner or printer is completed after installing the MP Drivers
  - Network communication between your scanner or printer and computer is enabled

  If the problem is still not solved, see Network Communication Problems.

Scanning Using Smartphone/Tablet

- **Using PIXMA/MAXIFY Cloud Link**
- **Printing/Scanning with Wireless Direct**

Faxing

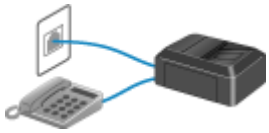

Preparing for Faxing

Registering Recipients

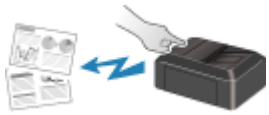

Sending Faxes Using Operation Panel of Printer

Sending Faxes from Computer (Windows)

Sending Faxes from Computer (Mac OS)

Receiving Faxes

Other Useful Fax Functions

Preparing for Faxing

Connect the printer to the telephone line and set up the printer before using the faxing functions. Then specify the basic setting such as sender information, date/time, and daylight saving time.

Important

- If the Power Disconnects:

  If there is a power failure or if you accidentally unplug the power cord, the date/time settings will be reset.

  - The settings for user information and directory will be retained.
  - All faxes stored in the printer's memory, such as unsent and received faxes, will be lost.

  If the power disconnects, the following will apply:

  - You will not be able to send or receive faxes, make copies, or scan originals.
  - When you are connecting the telephone, whether or not you can use it depends upon your telephone line or telephone.

Setting Up Printer

The printer must be set up depending on your telephone line and use of the faxing function.

All Setup

Setting Up the FAX

Individual Setup

1. Connecting Telephone Line
2. Setting Telephone Line Type
3. Setting Receive Mode
4. Setting Sender Information

Note

- You can set the fax setting according to the instruction on the LCD.

  Easy setup

Connecting Telephone Line

The connection method differs depending on your telephone line.

- If you connect the printer to wall telephone line directly/If you connect the printer with the xDSL splitter:

  Basic Connection (Connecting with General Telephone line)

- If you connect the printer to another line such as an xDSL:

  Connecting Various Lines

If the connection is incorrect, the printer cannot send/receive faxes. Connect the printer correctly.

Important

- Do not connect fax devices and/or telephones in parallel (US and Canada only).

  If two or more fax devices and/or telephones are connected in parallel, the following problems may occur and the printer may not operate properly.

  - If you pick up the handset of the telephone that is connected in parallel during fax transmission or reception, the fax image may be corrupted or a communication error may occur.
  - Such services as Caller ID, etc. may not operate properly on the telephone.

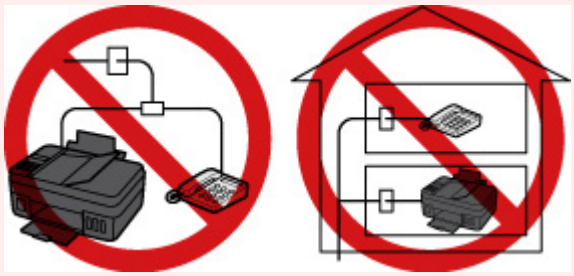

  If you cannot avoid parallel connections, set the receive mode to **TEL priority mode**, understanding that the above problems may occur. You will only be able to receive faxes manually.

Basic Connection (Connecting with General Telephone line)

Make sure that the printer is turned off, connect one end of supplied telephone line cable to the telephone line jack near the "LINE" mark of the printer, then connect the other end to the telephone line jack on the wall or to the telephone line jack of the xDSL splitter.

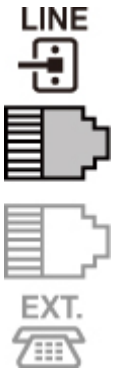

When you connect the telephone to the printer, make sure that the printer is turned off, connect one end of the modular cable to the external device jack near the "EXT." mark of the printer, then connect the other end to the telephone line jack of the telephone.

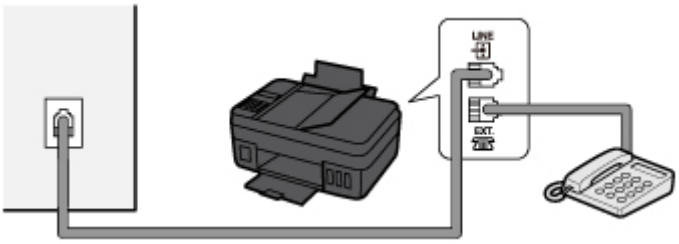

Important

- Be sure to connect the telephone line before the printer is turned on.

  If you connect the telephone line when the printer is turned on, turn the printer off and unplug the power cord. Wait for 1 minute then connect the telephone line and power plug.

Note

- Refer to Rear View for the position of the telephone line jack and the external device jack.
- Before connecting a telephone or answering machine, remove the Telephone connector cap.
- **For users in the UK:**

  If the connector of the external device cannot be connected to the jack on the printer, you will need to purchase a B.T. adapter to connect as follows:

  Attach the B.T. adapter to the modular cable connecting the external device, then connect the B.T. adapter to the external device jack.

Connecting Various Lines

This section introduces how to connect various lines.

These are examples and could not be guaranteed to suit every connecting condition. For details, refer to the instruction manual supplied with the network device (control devices such as an xDSL (Digital Subscriber Line) modem or terminal adapter) you are connecting to this printer.

Note

- xDSL is the generic term for the high speed digital communication technology with telephone line such as ADSL/HDSL/SDSL/VDSL.

- **Connecting to an Internet Telephone**

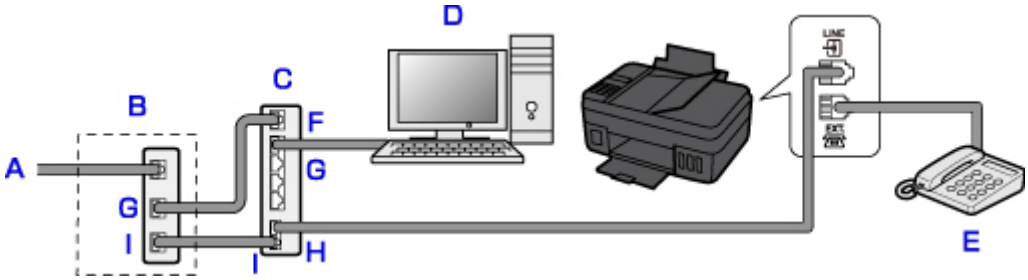

A. Digital Subscriber Line

B. xDSL modem (splitter may not be built-in to the modem)

C. Broadband router compatible with Internet Telephone

D. Computer

E. Telephone or answering machine

F. WAN (Wide Area Network) port

G. LAN (Local Area Network) port

H. TEL port

I. LINE port

* Port configurations and names may vary depending on the product.

Note

- When connecting to the xDSL line, select the same line type as you are subscribing to in **Telephone line type**.

  Setting Telephone Line Type

- **Connecting to an xDSL**

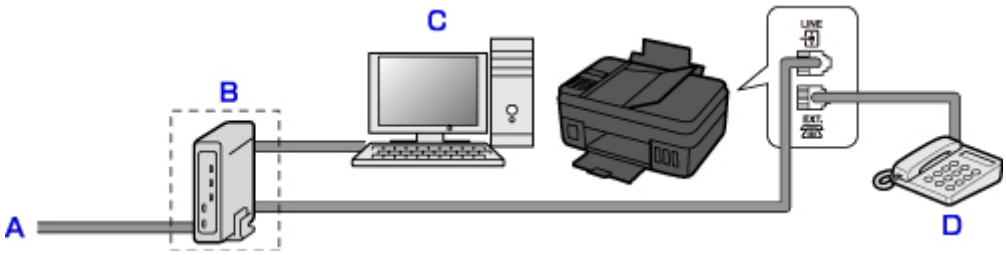

A. Analog Subscriber Line

B. xDSL modem (splitter may not be built-in to the modem)

C. Computer

D. Telephone or answering machine

Important

- When the splitter is not built-in to the modem, do not branch the telephone line before the splitter (wall side). And also, do not connect splitters in parallel. The printer may not be able to operate properly.

Note

- When connecting to the xDSL line, select the same line type as you are subscribing to in **Telephone line type**.

  Setting Telephone Line Type

- **Connecting to an ISDN Line**

  For details on ISDN (Integrated Service Digital Network) connection and settings, refer to the manuals supplied with your terminal adapter or dial-up router.

Setting Telephone Line Type

Before using your printer, make sure you set the correct telephone line type for your telephone line. If you are unsure of your telephone line type, contact your telephone company. For xDSL or ISDN connections, contact the telephone company or service provider to confirm your line type.

Important

- **For users in China**

  After plugging the power cord and turning on the printer, the telephone line type is selected automatically. However, if the printer is connected to the control device such as an xDSL modem or terminal adapter, the telephone line type may not be selected correctly.

  In this case, set the line type manually.

  For details on how to set the Telephone line type manually in China:

  Setting the Telephone Line Type Manually in China

Note

- **Telephone line type** will not appear in countries or regions where **Rotary pulse** is not supported.
- You can print USER'S DATA LIST to check the current setting.

  Summary of Reports and Lists

1. Make sure that printer is turned on.

2. Press the **Setup** button.

   The **Setup menu** screen is displayed.

3. Select **Fax settings**, then press the **OK** button.

4. Select **FAX user settings**, then press the **OK** button.

5. Select **Telephone line type**, then press the **OK** button.

6. Select a telephone line type, then press the **OK** button.

   Rotary pulse
   Select when your telephone line type is pulse dialing.

   Touch tone
   Select when your telephone line type is tone dialing.

   ### Note

   - The * (asterisk) on the LCD indicates the current setting.

7. Press the **FAX** button to return to the Fax standby screen.

Setting the Telephone Line Type Manually in China

This section describes the procedure to set the telephone line type manually in China.

1. Make sure that printer is turned on.

2. Press the **Setup** button.

   The **Setup menu** screen is displayed.

3. Select **Fax settings**, then press the **OK** button.

4. Select **FAX user settings**, then press the **OK** button.

5. Select **TEL line auto select**, then press the **OK** button.

   The current telephone line type is displayed.

   Note

   - If you do not need to change the telephone line type, press the **FAX** button to return to the Fax standby screen.

6. Select **OFF**, then press the **OK** button.

7. Select a telephone line type, then press the **OK** button.

   Rotary pulse
   Select when your telephone line type is pulse dialing.

   Touch tone
   Select when your telephone line type is tone dialing.

   Note

   - The * (asterisk) on the LCD indicates the current setting.

8. Press the **FAX** button to return to the Fax standby screen.

Setting Receive Mode

Set the receiving operation (receiving mode).

For details on how to set the receive mode:

Setting Receive Mode

You can select the appropriate mode.

For details on the selectable receive mode:

About Receive Mode

For details on the advanced settings of the receive mode:

Advanced Settings of Receive Mode

Note

- The receiving operation procedure varies depending on the selected receive mode.

  For details on receiving method depending on each receive mode:

  Receiving Faxes

- If you want to use a single telephone line for faxes and voice calls, you need to connect a telephone or an answering machine to the external device jack of this printer.

  For details on how to connect the telephone or the answering machine to the printer:

  Basic Connection (Connecting with General Telephone line)

Setting Receive Mode

This section describes the procedure to select the receive mode.

1. Make sure that printer is turned on.

2. Press the **FAX** button.

   The Fax standby screen is displayed.

3. Press the **Menu** button.

   The **FAX menu** screen is displayed.

4. Select **Receive mode set.**, then press the **OK** button.

5. Select the receive mode, then press the **OK** button.

   Note

   - The * (asterisk) on the LCD indicates the current setting.
   - For details on the receive mode:

     About Receive Mode

   - **DRPD** is available only in the US and Canada.

- **Network switch** may not be available depending on the country or region of purchase.
- Refer to Receiving Faxes for information on receiving faxes or the procedure for each receive mode.

About Receive Mode

You can select the receive mode suitable for your fax use conditions: whether you use a dedicated line for fax, etc.

Receive mode	Your fax use condition	Receiving operation
TEL priority mode	When mainly receiving voice calls (with a telephone or answering machine connected to the printer):	When a call incomes, the telephone will ring. Pick up the handset. If the call is a voice call, talk on the telephone. If the call is a fax, hang up the handset after the printer starts receiving the fax. **Note** • The telephone may not ring when a call incomes even if it is connected to the printer, depending on the type or settings of the telephone.
DRPD or **Network switch**	When receiving voice calls (with a telephone or answering machine connected to the printer) and subscribing to a ring pattern detection service provided by your telephone company:	When a call incomes, the telephone will ring. The printer detects a fax call by the fax ring pattern. If the call is a fax, the printer will receive the fax automatically. If the printer does not detect the fax ring pattern, the telephone will continue ringing. **Note** • The telephone may not ring when a call incomes even if it is connected to the printer, depending on the type or settings of the telephone.
Fax only mode	When not receiving voice calls:	When a fax incomes, the printer will receive the fax automatically.

Advanced Settings of Receive Mode

You can specify the advanced settings of each receive mode.

Note

- The * (asterisk) on the LCD indicates the current setting.

- **Advanced setting in TEL priority mode**

  You can specify the following setting items.

  - **Manual/auto switch**

If you select **ON**, the printer automatically receives faxes after the external device rang a specified length of time.

You can specify the length of time until automatic reception is started.

- **User-friendly RX**

  If you select **ON**, the printer automatically switches from telephone calling to fax reception by detecting the fax signal (CNG signal) when you lift the handset of the telephone or the answering machine answers. When you have an answering machine connected to the printer, select **ON** to switch to fax reception automatically after the answering machine answers.

  If you select **OFF**, the printer does not switch from telephone calling to fax reception automatically even if the printer detects the fax signal (CNG signal). Select **OFF** if you want the printer not to switch automatically during a call.

Note

- If you subscribe to Duplex Ringing service in Hong Kong, the number of times the external device rings specified with **Incoming ring** in **Fax only mode** is available in **TEL priority mode**.

  If you want to specify the number of times the external device rings in **TEL priority mode**, select **Fax only mode** for **Receive mode set.** under **FAX menu**, specify the number of times the external device rings with **Incoming ring**, then switch to **TEL priority mode** for **Receive mode set.**.

- If you subscribe to Duplex Ringing service in Hong Kong, we recommend that **Manual/auto switch** be set to **OFF**.

- **Advanced setting in Fax only mode**

  You can specify the following setting item.

  - **Incoming ring**

    You can specify the number of times the external device rings when incoming.

- **Advanced setting in DRPD**

  You can specify the following setting items.

  - **DRPD: FAX ring pat.**

    Sets the distinctive ring pattern of a call that the printer assumes is a fax call.

    If you subscribe to a DRPD service, set the ring pattern to match the pattern assigned by your telephone company.

    Setting the DRPD Ring Pattern (US and Canada only)

  - **Incoming ring**

    You can specify the number of times the external device rings when incoming.

- **Advanced setting in Network switch**

  You can specify the following setting item.

  - **Incoming ring**

    You can specify the number of times the external device rings when incoming.

Setting the DRPD Ring Pattern (US and Canada only)

If you have subscribed to a Distinctive Ring Pattern Detection (DRPD) service provided by your telephone company, your telephone company will assign two or more telephone numbers with distinctive ring patterns to your single telephone line, allowing you to have different numbers for fax calls and voice calls using only one telephone line. Your printer will automatically monitor the ring pattern, and will automatically receive the fax if the ring pattern is a fax call.

To use DRPD, follow the procedure below to set the fax ring pattern that matches the pattern assigned by your telephone company.

Note

- Contact your local telephone company for detailed information on this service.

1. Make sure that printer is turned on.

2. Press the **FAX** button.

   The Fax standby screen is displayed.

3. Press the **Menu** button.

   The **FAX menu** screen is displayed.

4. Select **Receive mode set.**, then press the **OK** button.

5. Select **DRPD**, then press the **OK** button.

   The confirmation screen asking whether to make advanced settings is displayed.

6. Select **Yes**, then press the **OK** button.

7. Select **DRPD: FAX ring pat.**, then press the **OK** button.

   The **DRPD: FAX ring pat.** screen is displayed.

8. Select the ring pattern that your telephone company assigned to your fax number, then press the **OK** button.

   DRPD: FAX ring pat.
   ◄ *Double ring ►

   Select from **Normal ring**, **Double ring**, **Short-short-long**, or **Short-long-short**.

   Note

   - The * (asterisk) on the LCD indicates the current setting.

9. Press the **FAX** button to return to the Fax standby screen.

Setting Sender Information

You can set the sender information such as date/time, unit name, and unit fax/telephone number.

- About Sender Information
- Setting Date and Time
- Setting Daylight Saving Time (Summer Time)
- Registering User Information

About Sender Information

If the unit name and unit fax/telephone number are registered, they are printed with date and time as sender information on the recipient's fax.

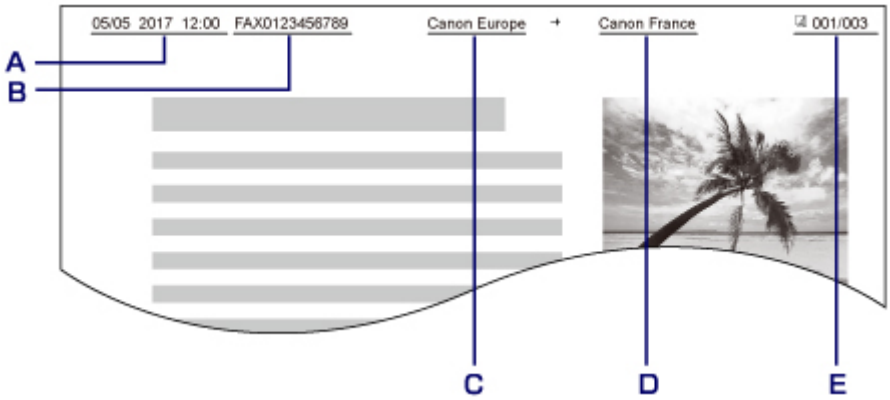

A. Date and time of transmission

B. Unit fax/telephone number

C. Unit name

D. The registered recipient's name is printed when sending faxes.

E. Page number

Note

- You can print USER'S DATA LIST to confirm the sender information you have registered.

  - Summary of Reports and Lists

- When sending faxes in black & white, you can select whether to print the sender information inside or outside the image area.

  Specify the setting on **TTI position** in **Adv. FAX settings** under **Fax settings**.

  - Adv. FAX settings

- You can select the date print format from three formats: **YYYY/MM/DD**, **MM/DD/YYYY**, and **DD/MM/YYYY**.

  Select the date print format on **Date display format** under **Dev. user settings**.

  - Dev. user settings

Setting Date and Time

This section describes the procedure to set the date and time.

1. Make sure that printer is turned on.

2. Press the **Setup** button.

   The **Setup menu** screen is displayed.

3. Select **Device settings**, then press the **OK** button.

4. Select **Dev. user settings**, then press the **OK** button.

5. Select **Date/time setting**, then press the **OK** button.

6. Set the date and time.

   Use the ◄► button to move the cursor under the desired position, then use the Numeric buttons to enter the date and time.

   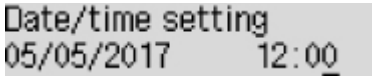

   Enter the date and time in 24-hour format.

   Enter only the last two digits of the year.

7. Press the **OK** button.

8. Press the **FAX** button to return to the Fax standby screen.

Setting Daylight Saving Time (Summer Time)

Some countries adopt the daylight saving time (summer time) system that shifts the clock time forward at certain periods of the year.

You can set your printer to automatically change the time by registering the date and time that daylight saving time (summer time) begins and ends.

Important

- Not all the latest information of all countries or regions is applied for **DST setting** by default. You need to change the default setting according to the latest information of your country or region.

Note

- This setting may not be available depending on the country or region of purchase.

1. Make sure that printer is turned on.

2. Press the **Setup** button.

   The **Setup menu** screen is displayed.

3. Select **Device settings**, then press the **OK** button.

4. Select **Dev. user settings**, then press the **OK** button.

5. Select **DST setting**, then press the **OK** button.

6. Select **ON**, then press the **OK** button.

   To disable summer time, select **OFF**.

7. Set the date and time when summer time starts.

   1. Select **Start date/time**, then press the **OK** button.
   2. Make sure that **Set month** is selected, then press the **OK** button.
   3. Select the month when summer time starts, then press the **OK** button.
   4. Make sure that **Set week** is selected, then press the **OK** button.
   5. Select the week when summer time starts, then press the **OK** button.
   6. Make sure that **Set day of week** is selected, then press the **OK** button.
   7. Select the day of the week when summer time starts, then press the **OK** button.
   8. Make sure that **Set shift time** is selected, then press the **OK** button.
   9. Use the ◄► button to move the cursor under the desired position, use the Numeric buttons to enter the time (in 24-hour format) when summer time starts, then press the **OK** button.

      Precede single digits with a zero.

      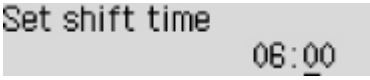

8. Set the date and time when summer time ends.

   1. Use the ◄► button to select **End date/time**, then press the **OK** button.
   2. Make sure that **Set month** is selected, then press the **OK** button.
   3. Use the ◄► button to select the month when summer time ends, then press the **OK** button.
   4. Make sure that **Set week** is selected, then press the **OK** button.
   5. Use the ◄► button to select the week when summer time ends, then press the **OK** button.
   6. Make sure that **Set day of week** is selected, then press the **OK** button.
   7. Use the ◄► button to select the day of the week when summer time ends, then press the **OK** button.
   8. Make sure that **Set shift time** is selected, then press the **OK** button.

9. Use the ◄► button to move the cursor under the desired position, use the Numeric buttons to enter the time (in 24-hour format) when summer time ends, then press the **OK** button.

   Precede single digits with a zero.

   ```
   Set shift time
                 07:00
   ```

9. Press the **FAX** button to return to the Fax standby screen.

Registering User Information

This section describes the procedure to register the user information.

Note

- Before sending a fax, be sure to enter your name and fax/telephone number in **Unit TEL no. registr.** and **Unit name registr.** on the **FAX user settings** screen (for US only).

1. Make sure that printer is turned on.

2. Press the **Setup** button.

   The **Setup menu** screen is displayed.

3. Select **Fax settings**, then press the **OK** button.

4. Select **FAX user settings**, then press the **OK** button.

5. Enter the unit fax/telephone number.

   1. Make sure that **Unit TEL no. registr.** is selected, then press the **OK** button.
   2. Use the Numeric buttons to enter the unit fax/telephone number.

      ```
      Unit TEL no. registr.
      = 0123456789_
      ```

   3. Press the **OK** button.

   Note

   - You can enter the fax/telephone number up to 20 digits, including spaces.
   - For details on how to enter or delete characters:

     Entering Numbers, Letters, and Symbols

6. Enter the unit name.

   1. Make sure that **Unit name registr.** is selected, then press the **OK** button.
   2. Use the Numeric buttons to enter the unit name.

3. Press the **OK** button.

Note

- You can enter the name up to 24 characters, including spaces.
- For details on how to enter or delete characters:

  Entering Numbers, Letters, and Symbols

7. Press the **FAX** button to return to the Fax standby screen.

Registering Recipients

- Registering Recipients Using Operation Panel of Printer
- Registering Recipients Using Speed Dial Utility2 (Windows)
- Registering Recipients Using Speed Dial Utility2 (macOS)

Registering Recipients Using Operation Panel of Printer

Registering recipients in the printer's directory in advance allows you to dial fax/telephone numbers simply.

The following methods to register are available:

- Recipient registration

  Registering the recipient's fax/telephone number and name allows you to send a fax by selecting a registered recipient in the printer directory.

  Registering Fax/Telephone Number of Recipients

- Group dial registration

  You can combine two or more recipients registered in advance into a group. You can send the same document to all the registered recipients in the group.

  Registering Recipients in Group Dial

You can register up to 20 recipients in total of individual recipients and group dials.

Note

- To change the registered information of the recipient or the group dial, see Changing Registered Information.
- To delete the registered information of the recipient or the group dial, see Deleting Registered Information.
- To print a list of the recipient's fax/telephone numbers and names registered, see Printing List of Registered Destinations.
- You can register, change, or delete the registered information of the recipient or the group dial using Speed Dial Utility on the computer.
  - For Windows:

    Registering Recipients Using Speed Dial Utility2 (Windows)

  - For macOS:

    Registering Recipients Using Speed Dial Utility2 (macOS)

Registering Fax/Telephone Number of Recipients

Before you can use the printer's directory, you need to register the recipients' fax/telephone numbers. Follow the procedure below to register the recipients' fax/telephone numbers.

1. Make sure that printer is turned on.

2. Press the **FAX** button.

   The Fax standby screen is displayed.

3. Press the **Menu** button.

   The **FAX menu** screen is displayed.

4. Select **Directory**, then press the **OK** button.

5. Select **Add directory entry**, then press the **OK** button.

   Note

   - You can select **Add directory entry** from **TEL no. registration** in **Fax settings** after pressing the **Setup** button.

6. Select **Recipient**, then press the **OK** button.

   The screen to select an ID number is displayed.

   Recipient reg. no.
   *

7. Use the ◄► button or the Numeric buttons to select an unregistered ID number, then press the **OK** button.

   Note

   - If you already registered the recipient, the fax/telephone number is displayed next to the ID number. If you already registered the group dial, **(Not available)** is displayed.

8. Select a registration method, then press the **OK** button.

9. Register the recipients' fax/telephone number.

   - **From call log (OUT)** is selected as the registration method:

     The screen to select the fax/telephone number from the outgoing call logs is displayed.

     Outgoing call log ►
     = 0567891234

     1. Select a fax/telephone number, then press the **OK** button.

The fax/telephone number selected from the outgoing call logs is displayed.

2. Check the fax/telephone number, then press the **OK** button.

   The fax/telephone number is registered to the printer and the screen to enter the recipient's name is displayed.

- **From call log (IN)** is selected as the registration method:

  The screen to select the fax/telephone number or the name from the incoming call logs is displayed.

  Incoming call log ▸
  J. Willard

  1. Select a fax/telephone number or a name, then press the **OK** button.

     The fax/telephone number selected from the incoming call logs is displayed.

  2. Check the fax/telephone number, then press the **OK** button.

     The fax/telephone number is registered to the printer and the screen to enter the recipient's name is displayed.

  Note

  - This registration method may not be available depending on the country or region of purchase.

- **Direct entry** is selected as the registration method:

  The screen to enter the fax/telephone number is displayed.

  TEL number
  = _

  1. Use the Numeric buttons to enter the fax/telephone number you want to register.

     TEL number ##→Pause
     = 0987654321_

  2. Press the **OK** button.

     The fax/telephone number is registered to the printer and the screen to enter the recipient's name is displayed.

     Note

     - You can enter the fax/telephone number up to 60 digits (40 digits for the US, Canada, Korea and some regions of Latin America), including spaces.

       Entering Numbers, Letters, and Symbols

     - Press the # button twice to enter a pause.
     - When **Telephone line type** in **FAX user settings** under **Fax settings** is set to **Rotary pulse**, you can enter a tone ("T") by pressing the **Tone** button.

10. Use the Numeric buttons to enter the recipient's name.

    Name :a
    L. George

If you select a name on **From call log (IN)** in step 9, the name may be already entered. If you do not change the name, go to step 11.

Note

- You can enter the name up to 16 characters, including spaces.

  Entering Numbers, Letters, and Symbols

11. Press the **OK** button to finalize registration.

Note

- To register another recipient's number and name, select an unregistered ID number and operate in the same procedure.
- To return to the Fax standby screen, press the **FAX** button.
- You can check the recipient's numbers and names you have registered by printing RECIPIENT TELEPHONE NUMBER LIST.

  Printing List of Registered Destinations

Registering Recipients in Group Dial

If you register two or more registered recipients to a group dial, you can send the same document successively to all recipients registered to the group dial.

1. Make sure that printer is turned on.

2. Press the **FAX** button.

   The Fax standby screen is displayed.

3. Press the **Menu** button.

   The **FAX menu** screen is displayed.

4. Select **Directory**, then press the **OK** button.

5. Select **Add directory entry**, then press the **OK** button.

   Note

   - You can select **Add directory entry** from **TEL no. registration** in **Fax settings** after pressing the **Setup** button.

6. Select **Group dial**, then press the **OK** button.

   The screen to select an ID number is displayed.

   Group reg. number
   *

7. Use the ◄► button or the Numeric buttons to select an unregistered ID number, then press the **OK** button.

   Note

   - If you already registered the recipient, **(Not available)** is displayed next to the ID number. If you already registered the group dial, the registered group name is displayed.

   The **Group member** screen is displayed.

   Group member
   00

8. Register the registered recipient as a member of the group dial.

   1. Press the **Menu** button.
   2. Choose a recipient to register as a member.

You can choose a recipient with the two methods. The method can be switched by pressing the # button.

- When **Add to group** is displayed on the LCD:

  ```
  Add to group          ▸
  03 *00 L.George
  ```

  Use the ◄► button to select a recipient's ID number to register to the group dial.

- When **Enter first letter** is displayed on the LCD:

  ```
  Enter first letter     :A
  _
  ```

  After you use the Numeric buttons to enter the first letter of the recipient's name you want to search, the registered recipients are displayed in alphabetical order.

  ```
  Add to group          ▸
  03 *02 D.V.Michael
  ```

  Use the ◄► button to select a recipient's ID number to register to the group dial.

3. Press the **OK** button.

   The selected recipient is registered as a member of the group dial.

   ```
   Group member
    03 *02 D.V.Michael
   ```

4. Press the **Menu** button to display the screen to select an ID number, then add another member.

   Repeat this step to register the other recipient to the same group dial.

   Note

   - You can check the recipient's ID number and name registered to the group dial by using the ◄► button.

9. Press the **OK** button after finishing registering the member you want to register to the group dial.

   The screen to enter the group name is displayed.

   ```
   Group name            :a
   _
   ```

10. Use the Numeric buttons to enter the group name.

    ```
    Group name           :1
        Friend 1_
    ```

    Note

    - You can enter the name up to 16 characters, including spaces.

      Entering Numbers, Letters, and Symbols

11. Press the **OK** button to finalize registration.

Note

- To register another group, select an unregistered ID number and operate in the same procedure.
- To return to the Fax standby screen, press the **FAX** button.
- You can check the recipients you have registered to the group dial by printing GROUP DIAL TELEPHONE NO. LIST.

  Printing List of Registered Destinations

Changing Registered Information

To change information registered for recipient and group dial, follow the procedure below.

1. Make sure that printer is turned on.

2. Press the **FAX** button.

   The Fax standby screen is displayed.

3. Press the **Menu** button.

   The **FAX menu** screen is displayed.

4. Select **Directory**, then press the **OK** button.

5. Select **Add directory entry**, then press the **OK** button.

   Note

   - You can select **Add directory entry** from **TEL no. registration** in **Fax settings** after pressing the **Setup** button.

6. Change the registered information.

   - To change the recipient's information:

     1. Select **Recipient**, then press the **OK** button.
     2. Use the ◄► button or the Numeric buttons to select a recipient's ID number, then press the **OK** button.
     3. Select **Edit**, then press the **OK** button.

        The screen to select a registration method is displayed as well as when you register the recipient.
     4. Select a registration method, then press the **OK** button.
     5. Change the recipient's fax/telephone number, then press the **OK** button.

        - **From call log (OUT)** is selected as the registration method:

          The screen to select the fax/telephone number from the outgoing call logs is displayed. After you use the ◄► button to select a fax/telephone number and press the **OK** button, the editing screen is displayed. Change the recipient's fax/telephone number, then press the **OK** button.

        - **From call log (IN)** is selected as the registration method:

          The screen to select the fax/telephone number or the name from the incoming call logs is displayed. After you use the ◄► button to select a fax/telephone number or a name and press the **OK** button, the editing screen is displayed. Change the recipient's fax/telephone number, then press the **OK** button.

Note

- This registration method may not be available depending on the country or region of purchase.

◦ **Direct entry** is selected as the registration method:

The editing screen is displayed. Change the recipient's fax/telephone number, then press the **OK** button.

Note

- You can enter the fax/telephone number up to 60 digits (40 digits for the US, Canada, Korea and some regions of Latin America), including spaces.

  Entering Numbers, Letters, and Symbols

- Press the # button twice to enter a pause.
- When **Telephone line type** in **FAX user settings** under **Fax settings** is set to **Rotary pulse**, you can enter a tone ("T") by pressing the **Tone** button.

6. Change the recipient's name, then press the **OK** button.

Note

- You can enter the name up to 16 characters, including spaces.

  Entering Numbers, Letters, and Symbols

- To change a group dial:

1. Select **Group dial**, then press the **OK** button.
2. Use the ◄► button or the Numeric buttons to select an ID number of group dial to change, then press the **OK** button.
3. Select **Edit**, then press the **OK** button.
4. Edit the member of the group dial.

   To add a member, press the **Menu** button to display the screen to select an ID number and then add another member.

   To delete a member, select a member to delete and then press the **Tone** button.

5. Change the group name, then press the **OK** button.

Note

- You can enter the name up to 16 characters, including spaces.

  Entering Numbers, Letters, and Symbols

Note

- To return to the Fax standby screen, press the **FAX** button.

Deleting Registered Information

To delete information registered for recipient and group dial, follow the procedure below.

1. Make sure that printer is turned on.

2. Press the **FAX** button.

   The Fax standby screen is displayed.

3. Press the **Menu** button.

   The **FAX menu** screen is displayed.

4. Select **Directory**, then press the **OK** button.

5. Select **Add directory entry**, then press the **OK** button.

   Note

   - You can select **Add directory entry** from **TEL no. registration** in **Fax settings** after pressing the **Setup** button.

6. Delete the registered information.

   - To delete the recipient's information:
     1. Select **Recipient**, then press the **OK** button.
     2. Use the ◀▶ button or the Numeric buttons to select an ID number of group dial to delete, then press the **OK** button.
     3. Select **Delete**, then press the **OK** button.
     4. Select **Yes**, then press the **OK** button.
   - To delete a group dial:
     1. Select **Group dial**, then press the **OK** button.
     2. Use the ◀▶ button or the Numeric buttons to select an ID number of group dial to delete, then press the **OK** button.
     3. Select **Delete**, then press the **OK** button.
     4. Select **Yes**, then press the **OK** button.

   Note

   - To return to the Fax standby screen, press the **FAX** button.

Printing List of Registered Destinations

You can print a list of the fax/telephone numbers and can keep it near the printer to refer to when dialing.

1. Make sure that printer is turned on.

2. Load paper.

3. Press the **FAX** button.

   The Fax standby screen is displayed.

4. Press the **Menu** button.

   The **FAX menu** screen is displayed.

5. Select **Print reports/lists**, then press the **OK** button.

6. Select **Directory list**, then press the **OK** button.

7. Select an item to print, then press the **OK** button.

   - If you selected **Recipient**:

     The confirmation screen asking if you print the list alphabetically by name is displayed.

     If you select **Yes**, RECIPIENT TELEPHONE NUMBER LIST is printed in alphabetical order.

     If you select **No**, RECIPIENT TELEPHONE NUMBER LIST is printed in the order of the ID number.

   - If you selected **Group dial**:

     GROUP DIAL TELEPHONE NO. LIST is printed.

Registering Recipients Using Speed Dial Utility2 (Windows)

About Speed Dial Utility2

Speed Dial Utility2 is a utility for forwarding the telephone directory registered on the printer to a computer and registering/changing it on the computer. In addition, you can register the telephone directory edited on the computer to the printer. You can also save them on the computer as a backup.

For safety reasons, it is recommended that you backup the registered data on the computer using Speed Dial Utility2.

- Starting Up Speed Dial Utility2
- Speed Dial Utility2 Dialog box
- Saving Registered Telephone Directory on Printer to Your Computer
- Registering a Fax/telephone Number Using Speed Dial Utility2
- Changing a Fax/telephone Number Using Speed Dial Utility2
- Deleting a Fax/telephone Number Using Speed Dial Utility2
- Changing Sender Information Using Speed Dial Utility2
- Registering/Changing Rejected Number Using Speed Dial Utility2
- Registering Telephone Directory Has been Saved on Your Computer to Printer

Starting Up Speed Dial Utility2

Important

- Before starting up Speed Dial Utility2, make sure that the printer is connected to the computer correctly.
- Do not plug in or unplug any cables while the printer is in operation, or when the computer is in sleep or standby mode.
- If your printer is compatible with LAN connection, make sure that the printer is connected to the computer with LAN connection to use Speed Dial Utility2 via LAN connection.
- The password entry screen may appear during startup or operation. If it appears, enter the administrator password, and then click **OK**. If you do not know the administrator password, contact the administrator of the printer.

Follow the procedure below to start up Speed Dial Utility2.

1. Make sure printer is turned on.

2. Start up Speed Dial Utility2.

   - For Windows 10, click **Start** button and select **All apps**, **Canon Utilities**, and then **Speed Dial Utility2**.
   - For Windows 8.1 or Windows 8, select **Speed Dial Utility2** on the **Start** screen to start Speed Dial Utility2. If **Speed Dial Utility2** is not displayed on the **Start** screen, select the **Search** charm, and then search for "Speed Dial Utility2".
   - For Windows 7 or Windows Vista, click **Start** and select **All programs**, **Canon Utilities**, **Speed Dial Utility2**, and then **Speed Dial Utility2**.

   Speed Dial Utility2 starts up.

Note

- You can also start up Speed Dial Utility2 from Quick Utility Toolbox.

Speed Dial Utility2 Dialog box

The following items are on the **Speed Dial Utility2** dialog box.

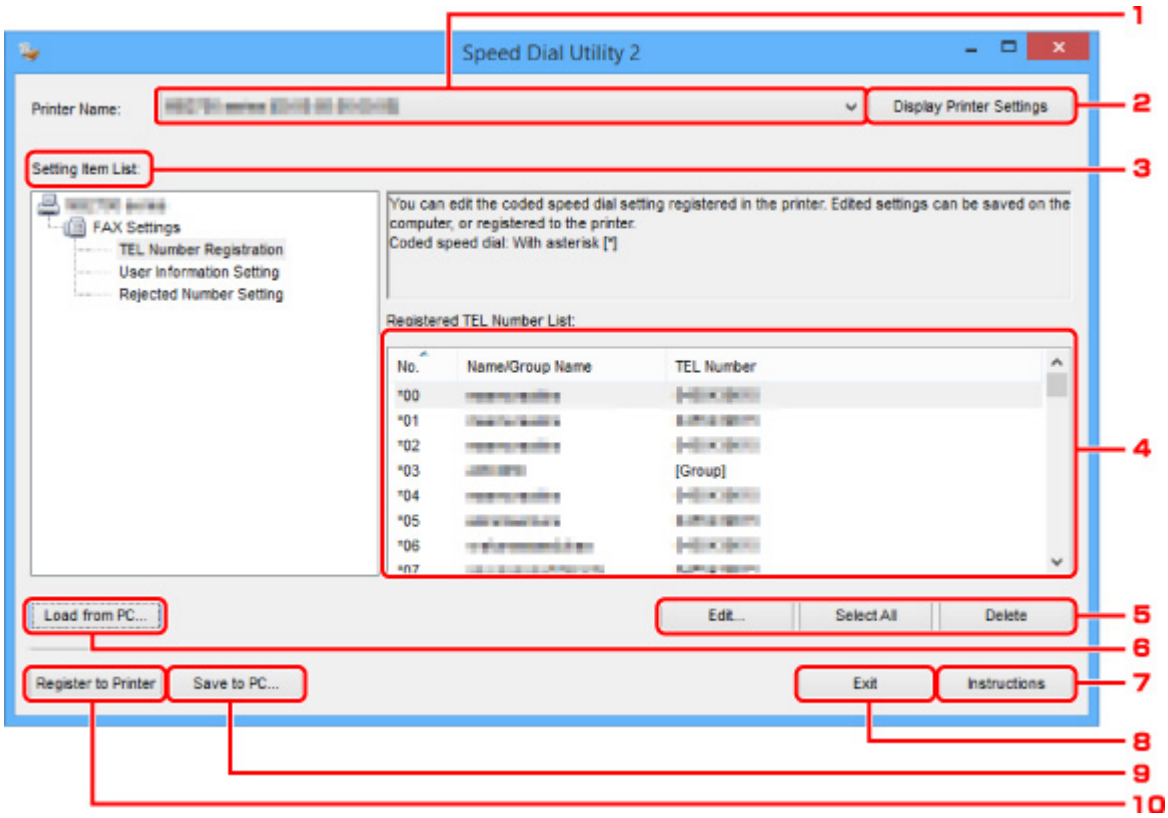

1. **Printer Name:**

   Selects the printer for editing the telephone directory using Speed Dial Utility2.

   Behind printer name, printer's MAC address is displayed.

   Note

   - For checking printer's MAC address, refer to "Checking Network Information" for your model from Home of the Online Manual.
   - For printer that supports both wireless LAN connection and wired LAN connection, MAC address of wired LAN connection is displayed regardless of the connection method.

2. **Display Printer Settings**

   Loads the telephone directory registered on the printer that selected for **Printer Name:** into Speed Dial Utility2.

3. **Setting Item List:**

   Selects a setting item for editing. Choose one item from **TEL Number Registration**, **User Information Setting**, and **Rejected Number Setting**.

4. Registered information list

   Displays the registered information selected for **Setting Item List:**.

Note

- By clicking on the item name, you can sort the display order.

5. **Edit.../Select All/Delete**

   Edits the item that selected for **Setting Item List:**, or deletes the item, or selects all the items.

   When multiple items on the registered information list are selected, you cannot use the **Edit...** button.

6. **Load from PC...**

   Displays the telephone directory saved on the computer.

7. **Instructions**

   Displays this guide.

8. **Exit**

   Quits Speed Dial Utility2. Information registered or edited using Speed Dial Utility2 is neither saved on the computer nor registered on the printer.

9. **Save to PC...**

   Saves the telephone directory edited using Speed Dial Utility2 on the computer.

10. **Register to Printer**

    Registers the telephone directory edited using Speed Dial Utility2 to the printer.

Saving Registered Telephone Directory on Printer to Your Computer

Follow the procedure below to save the telephone directory (includes recipients' name, recipients' fax/telephone number, group dial, user's name, user's fax/telephone number, and rejected numbers) that registered on the printer to the computer.

1. Start up Speed Dial Utility2.

2. Select a printer from **Printer Name:** list box, and then click **Display Printer Settings**.

3. Click **Save to PC...**.

4. Enter file name on displayed screen, and then click **Save**.

Note

- The data of the telephone directory (RSD file, *.rsd) can be imported to other printer.

  Registering Telephone Directory Has been Saved on Your Computer to Printer

Registering a Fax/telephone Number Using Speed Dial Utility2

Follow the procedure below to register fax/telephone numbers.

Note

Before you register fax/telephone numbers using Speed Dial Utility2, make sure that no fax operations are in progress.

1. Start up Speed Dial Utility2.

2. Select a printer from **Printer Name:** list box, and then click **Display Printer Settings**.

3. Click **TEL Number Registration** from **Setting Item List:**.

   The list of registered fax/telephone numbers is displayed.

4. Select an unoccupied code from list, and then click **Edit...**.

   The **Individual or Group Selection** dialog box is displayed.

5. Click **Register individual TEL number** or **Register group dial**, and then click **Next...**.

   - If **Register individual TEL number** is selected:

     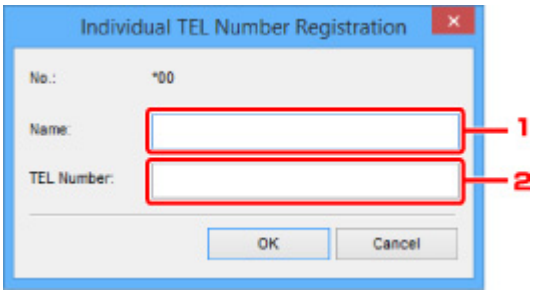

     1. Enter name.
     2. Enter fax/telephone number.

   - If **Register group dial** is selected:

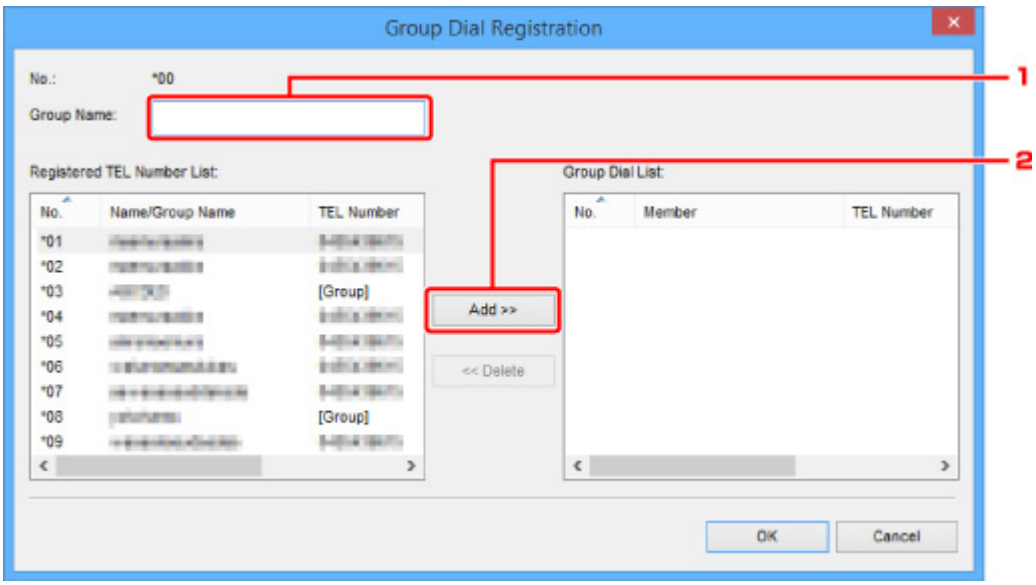

1. Enter group name.
2. Select a code you want to add to group dial, and then click **Add >>**.

Note

- You can only add the numbers that have already been registered.

6. Click **OK**.

To continue registering fax/telephone numbers or a group dial, repeat steps 4 to 6.

- To save the registered information on the computer.
  1. Click **Save to PC...**.
  2. Enter file name on displayed screen, and then click **Save**.
- To register the registered information to the printer:
  1. Click **Register to Printer**.
  2. When message appears, check it and click **OK**.

     The information is registered to the printer.

Changing a Fax/telephone Number Using Speed Dial Utility2

Follow the procedure below to change fax/telephone numbers.

Note

- Before you change fax/telephone numbers using Speed Dial Utility2, make sure that no fax operations are in progress.

1. Start up Speed Dial Utility2.

2. Select a printer from **Printer Name:** list box, and then click **Display Printer Settings**.

3. Click **TEL Number Registration** from **Setting Item List:**.

   The list of registered fax/telephone numbers is displayed.

4. Select a code to change from list, and then click **Edit...**.

   - If an individual fax/telephone number is selected:

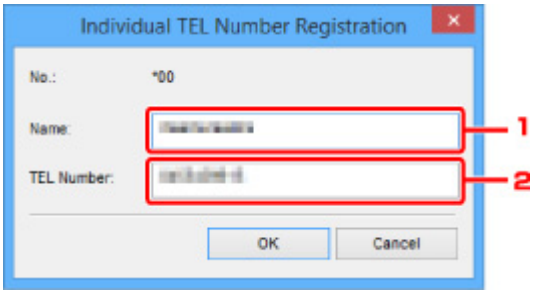

     1. Enter a new name.
     2. Enter a new fax/telephone number.

   - If a group dial is selected:

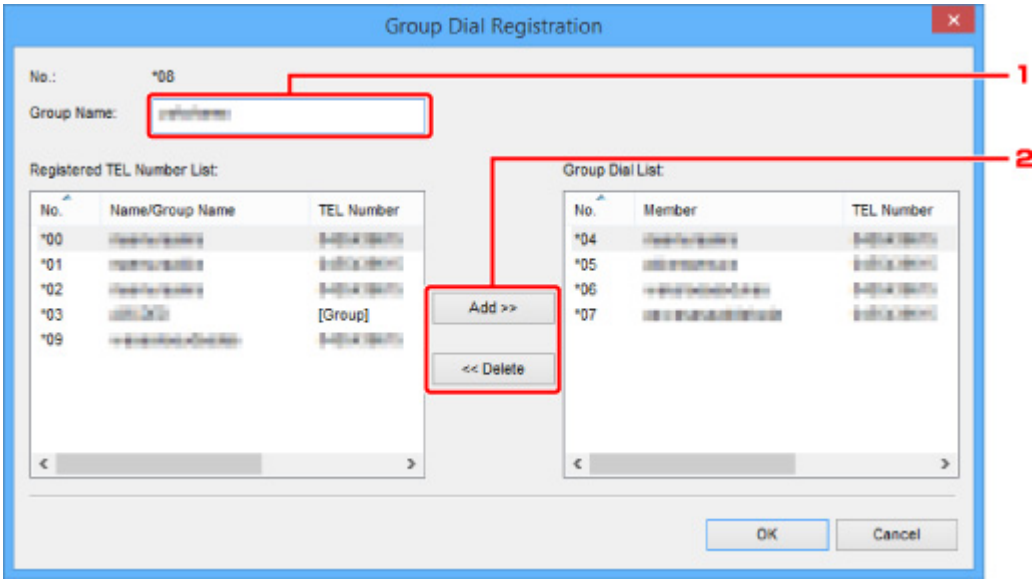

     1. Enter a new group name.

2. Add or delete a member to/from group dial.

   To add a member:

   Select a code to add to group dial, and then click **Add >>**.

   To delete a member:

   Select a code to delete from group dial, and then click **<< Delete**.

5. Click **OK**.

To continue changing fax/telephone numbers or group dials, repeat steps 4 and 5.

- To save the edited information on the computer.
  1. Click **Save to PC...**.
  2. Enter file name on displayed screen, and then click **Save**.
- To register the edited information to the printer:
  1. Click **Register to Printer**.
  2. When message appears, check it and click **OK**.

     The information is registered to the printer.

Deleting a Fax/telephone Number Using Speed Dial Utility2

Follow the procedure below to delete fax/telephone numbers.

Note

- Before you delete fax/telephone numbers using Speed Dial Utility2, make sure that no fax operations are in progress.

1. Start up Speed Dial Utility2.

2. Select a printer from **Printer Name:** list box, and then click **Display Printer Settings**.

3. Click **TEL Number Registration** from **Setting Item List:**.

   The list of registered fax/telephone numbers is displayed.

4. Select a code to delete from list, and then click **Delete**.

   Note

   - To delete all fax/telephone numbers on the list, click **Select All**, and then **Delete**.

5. When confirmation screen appears, click **OK**.

   The selected fax/telephone number is deleted.

   To continue deleting fax/telephone numbers, repeat steps 4 and 5.

   - To save the edited information on the computer.
     1. Click **Save to PC...**.
     2. Enter file name on the displayed screen, and then click **Save**.
   - To register the edited information to the printer:
     1. Click **Register to Printer**.
     2. When message appears, check it and click **OK**.

        The information is registered to the printer.

Changing Sender Information Using Speed Dial Utility2

Follow the procedure below to change the user's name or fax/telephone number.

1. Start up Speed Dial Utility2.

2. Select a printer from **Printer Name:** list box, and then click **Display Printer Settings**.

3. Click **User Information Setting** from **Setting Item List:**.

   The user's information is displayed.

4. Select an item to change, and then click **Edit...**.

   The **User Information** dialog box is displayed.

5. Enter new user's name on **User Name** and new fax/telephone number in **TEL Number**, and then click **OK**.

   - To save the edited information on the computer:
     1. Click **Save to PC...**.
     2. Enter file name on displayed screen, and then click **Save**.
   - To register the edited information to the printer:
     1. Click **Register to Printer**.
     2. When message appears, check it and click **OK**.

        The information is registered to the printer.

Registering/Changing Rejected Number Using Speed Dial Utility2

Follow the procedure below to register, change, or delete rejected numbers.

1. Start up Speed Dial Utility2.

2. Select a printer from **Printer Name:** list box, and then click **Display Printer Settings**.

3. Click **Rejected Number Setting** from **Setting Item List:**.

   The list of rejected numbers is displayed.

   - To register a rejected number:
     1. Select an unoccupied code from list, and then click **Edit...**.
     2. Enter fax/telephone number in **Rejected Number** dialog box, and then click **OK**.
   - To change a rejected number:
     1. Select a code to change from list, and then click **Edit...**.
     2. Enter fax/telephone number in **Rejected Number** dialog box, and then click **OK**.
   - To delete a rejected number:
     1. Select a code to delete from list, and then click **Delete**.

        The selected fax/telephone number is deleted.

        Note

        - To delete all fax/telephone numbers on the list, click **Select All**, and then **Delete**.

Registering Telephone Directory Has been Saved on Your Computer to Printer

You can load the data of the telephone directory (RSD file, *.rsd) and register it to your printer.

The data of the telephone directory (RSD file, *.rsd) that is exported from other printer can be loaded and registered to your printer.

Note

- In Speed Dial Utility2, the data of the telephone directory (RSD file, *.rsd) that is exported using Speed Dial Utility can be loaded.

1. Start up Speed Dial Utility2.
2. Select a printer from **Printer Name:** list box, and then click **Display Printer Settings**.
3. Click **Load from PC...**.
4. Select a data of telephone directory (RSD file, *.rsd) to register to your printer.
5. Click **Open** on dialog box.

   The selected telephone directory is displayed.

   Note

   - If you select the data of the telephone directory (RSD file, *.rsd) that is exported from other printer, the confirmation message appears. Click **OK**.

6. Click **Register to Printer**.

   The telephone directory that has been saved on the computer is registered to your printer.

Sending Faxes Using Operation Panel of Printer

- Sending Faxes by Entering Fax/Telephone Number
- Resending Faxes (Redialing Busy Number)
- Setting Items for Sending Faxes
- Sending Faxes Using Useful Functions

Sending Faxes by Entering Fax/Telephone Number

This section describes dialing and sending faxes directly by entering the fax/telephone numbers.

Important

- It may be possible that faxes will reach unintended recipients due to the misdialing or incorrect registration of fax/telephone numbers. When you send important documents, we recommend that you send them after speaking on the telephone.

  Sending Fax after Speaking on Telephone

1. Make sure that printer is turned on.

2. Press the **FAX** button.

   The Fax standby screen is displayed.

   ```
   FAX    [Start]=Offhook
   05/05 12:19 TEL prior
   ```

3. Load documents on the platen glass or in the ADF.

   Important

   - When sending a double-sided document, load the document on the platen glass. Double-sided documents cannot be automatically scanned and sent from the ADF.

   Note

   - For details on the types, conditions of document, and how to load the document:

     Loading Originals

4. Adjust the scan contrast and resolution as necessary.

   Setting Items for Sending Faxes

5. Use the Numeric buttons to dial the recipient's fax/telephone number.

   ```
   FAX          ##→Pause
   =             0987654321
   ```

   Use the following buttons to dial the recipient's fax/telephone number.

   Numeric buttons:

   Enters the number.

   ► button:

   Enters a space.

   ◄ button:

   Deletes the last character you entered.

 # button:

By pressing this button once, "#" is entered. By pressing this button one more time, "P" is entered.

6. Press the **Color** button for color transmission, or the **Black** button for black & white transmission.

   The printer starts scanning the document.

   Important

   - Color transmission is available only when the recipient's fax device supports color faxing.
   - Do not open the document cover until scanning is completed.

7. Start sending.

   - **If you load the document in the ADF:**

     The printer scans the document automatically and starts sending the fax.

     Note

     - To cancel a fax transmission, press the **Stop** button. To cancel a fax transmission while it is in progress, press the **Stop** button, then follow the instructions on the LCD.
     - If documents remain in the ADF after the **Stop** button is pressed while scanning is in progress, **Document in ADF [OK]Eject the document** is displayed on the LCD. By pressing the **OK** button, the remaining documents are automatically ejected.

   - **If you load the document on the platen glass:**

     After scanning the document, the confirmation screen asking you if you load the next document is displayed.

     To send the scanned document, press the **OK** button to start sending it.

     To send two or more pages, follow the message to load the next page, and press the **Color** or **Black** button. After scanning all pages, press the **OK** button to start sending.

     Note

     - To cancel sending the fax, press the **Stop** button.

Note

- When your printer is connected to a PBX (Private Branch Exchange) system, refer to the operating instructions of the system for details on dialing the recipient's fax/telephone number.
- In case the printer was not able to send a fax, such as when the recipient's line was busy, it has the function to automatically redial the number after a specified interval. Automatic redialing is enabled by default.

  Automatic Redialing

- Unsent documents, such as those pending redial, are stored in the printer's memory. They are not stored in the case of a sending error.

  Document Stored in Printer's Memory

- Do not unplug the power cord until all documents are sent. If you unplug the power cord, all unsent documents stored in the printer's memory are lost.

Resending Faxes (Redialing Busy Number)

There are two methods of redialing: Automatic redialing and Manual redialing.

- Automatic Redialing

  If you send a document and the recipient's line is busy, the printer will redial the number after a specified interval.

  Automatic Redialing

- Manual Redialing

  You can redial to the recipients dialed using the Numeric buttons.

  Manual Redialing

Important

- It may be possible that faxes will reach unintended recipients due to the misdialing or incorrect registration of fax/telephone numbers. When you send important documents, we recommend that you send them after speaking on the telephone.

  Sending Fax after Speaking on Telephone

Note

- Automatic redialing is enabled by default.
- For details on the basic sending operations:

  Sending Faxes by Entering Fax/Telephone Number

Automatic Redialing

You can enable or disable automatic redialing. If you enable automatic redialing, you can specify the maximum number of redial attempts and the length of time the printer waits between redial attempts.

Enable and specify the automatic redialing setting on **Auto redial** in **Adv. FAX settings** under **Fax settings**.

Adv. FAX settings

Important

- While automatic redialing, the unsent fax is stored in the printer's memory temporarily until the sending fax is complete. If a power failure occurs or you unplug the power cord before automatic redialing is complete, all faxes stored in the printer's memory are deleted and not sent.

Note

- To cancel automatic redialing, wait until the printer starts redialing, then press the **Stop** button.
- To cancel automatic redialing, delete the unsent fax from the printer's memory while the printer is on-standby for a redial operation. For details, see Deleting Document in Printer's Memory.

Manual Redialing

Follow the procedure below for manual redialing.

1. Make sure that printer is turned on.

2. Press the **FAX** button.

   The Fax standby screen is displayed.

3. Load documents on the platen glass or in the ADF.

4. Adjust the scan contrast and resolution as necessary.

   Setting Items for Sending Faxes

5. Press the **Menu** button.

   The **FAX menu** screen is displayed.

6. Select **Redial**, then press the **OK** button.

7. Select the recipient's number to redial, then press the **OK** button.

8. Press the **Color** button for color transmission, or the **Black** button for black & white transmission.

   Important

   - Color transmission is available only when the recipient's fax device supports color faxing.

Note

- For manual redialing, the printer memorizes up to 10 recent recipients dialed by entering the fax/telephone numbers. Note that the printer does not memorize any recipients dialed using the redial function or selecting from the directory.
- To cancel manual redialing, press the **Stop** button. To cancel a fax transmission while it is in progress, press the **Stop** button, then follow the instructions on the LCD.
- If documents remain in the ADF after the **Stop** button is pressed while scanning is in progress, **Document in ADF [OK]Eject the document** is displayed on the LCD. By pressing the **OK** button, the remaining documents are automatically ejected.

Setting Items for Sending Faxes

If you select **FAX TX settings** after pressing the **Menu** button on the Fax standby screen, you can specify the settings of the scan contrast and the scan resolution.

Adjust the scan contrast and resolution following the procedure below.

1. Press the **Menu** button on the Fax standby screen.

   The **FAX menu** screen is displayed.

2. Select **FAX TX settings**, then press the **OK** button.

3. Select **Scan contrast**, then press the **OK** button.

4. Select the scan contrast, then press the **OK** button.

   The ◄ button decreases the scan contrast, and the ► button increases the scan contrast.

5. Select **Scan resolution**, then press the **OK** button.

6. Select the scan resolution.

   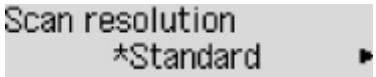

   Note

   - The * (asterisk) on the LCD indicates the current setting.

   Standard
   Suitable for text-only documents.

   Fine
   Suitable for fine-print documents.

   Extra fine
   Suitable for detailed illustration or fine-print quality documents.

   If the recipient's fax device is not compatible with **Extra fine** (300 x 300 dpi), the fax will be sent in the **Standard** or **Fine** resolution.

   Photo
   Suitable for photographs.

   Note

   - When sending a color fax, documents are always scanned in the same resolution (200 x 200 dpi). The image quality (compression rate) is determined by which scan resolution is selected, except that **Extra fine** and **Photo** provide the same image quality.

7. Press the **OK** button.

   The LCD returns to the Fax standby screen.

Sending Faxes from Computer (Windows)

- Sending a FAX (Fax Driver) Basic
- Creating an Address Book (Fax Driver)
- Edit or Remove a Recipient from an Address Book (Fax Driver)
- Search for a Recipient in an Address Book (Fax Driver)
- Cannot Send Faxes from Computer
- How to Open the Setting Screen of the Fax Driver
- General Notes (Fax Driver)

Sending a FAX (Fax Driver)

You can send faxes using the fax driver from applications that support document printing.

Note

- Only black and white transmission is supported.

1. Make sure that the machine is turned on.

2. Open the document you want to fax with an application (such as Notepad), and then click the Print command. (The command is **Print...** on the **File** menu.)

3. In **Select Printer** or **Name** in the **Print** dialog box, select **Canon XXX series FAX** (where "XXX" is the model name).

4. Click **Print** or **OK**.

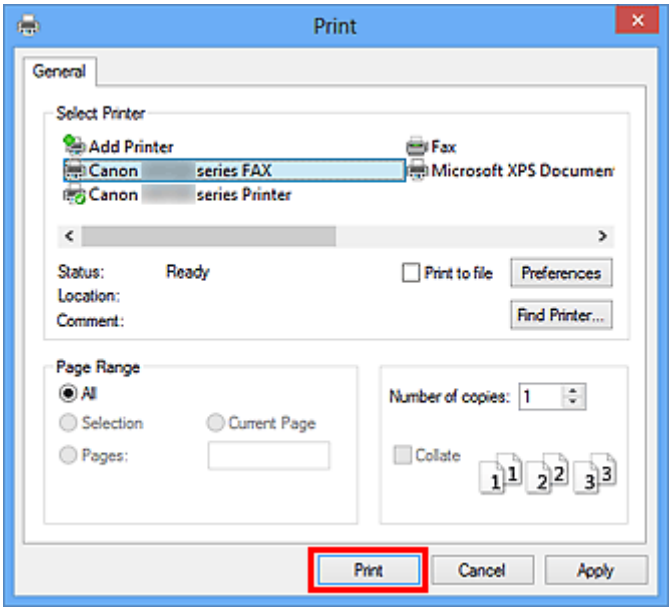

* **Print** dialog box in Notepad

Note

- Click **Preferences** or **Properties** in the **Print** dialog box to open the print settings dialog box of the fax driver in which you can set the paper size and print orientation. For details on how to open the print settings dialog box of the fax driver, see "How to Open the Setting Screen of the Fax Driver."

5. Click **Display Address Book...** in **Set Recipient** in the **Send FAX** dialog box.

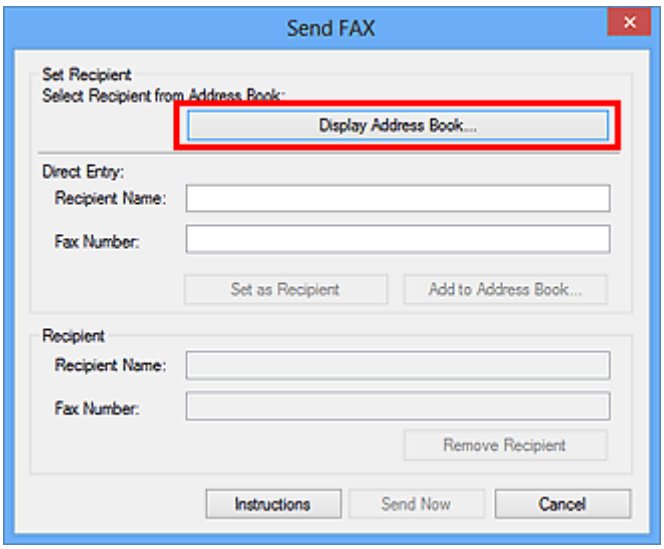

6. Select a recipient from **Recipient Name** in the **Select Recipient from Address Book** dialog box, then click **Set as Recipient**.

   The selected recipient is reflected in **Recipient** in the **Send FAX** dialog box.

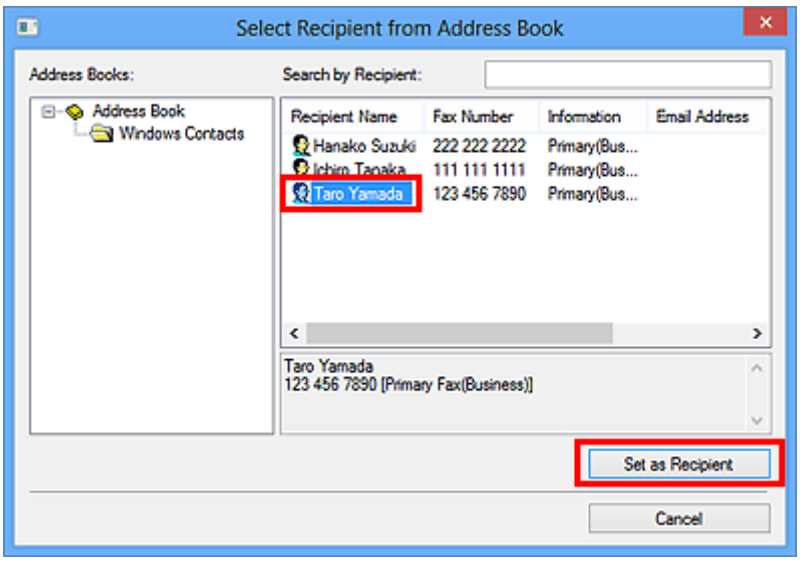

Important

- You cannot specify a recipient if there is no recipient registered in the address book. Register the recipient in the address book and reopen the address book.

  For details on how to register recipients in the address book, see "Creating an Address Book (Fax Driver)."

- If the recipient's fax/telephone number is entered incorrectly or the registered fax/telephone number is incorrect, the fax may be sent to an unexpected recipient. When sending an important fax, it is recommended that you send it after confirming the entered information and recipient's status.

Note

- You can also specify **Recipient** by entering the **Recipient Name** and **Fax Number** in **Direct Entry** in the **Send FAX** dialog box and then clicking **Set as Recipient**.
  - For details on valid characters, see "General Notes (Fax Driver)."
  - You can send faxes even if only the **Fax Number** is entered.
  - You can register the recipient you entered to the address book by clicking **Add to Address Book...**. For details on how to register recipients in the address book, see "Creating an Address Book (Fax Driver)."
- Add the outside line access number before the fax number as needed.

  (Example: When the outside line access number is "0" and the fax number is "XXX-XXXX", enter "0XXX-XXXX".)

7. Click **Send Now**.

   When a confirmation message is displayed, click **OK**.

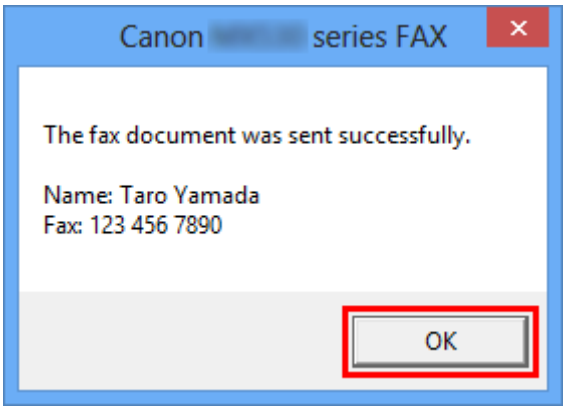

Important

- If you cannot send a fax due to line failure or other problem, see "Cannot Send Faxes from Computer."

Canceling Transmission

If you click **Send Now** in the **Send FAX** dialog box, the printer icon is displayed in the taskbar. Double-click this icon to display the list of fax jobs awaiting transmission or being sent.

Right-clicking a job and selecting **Cancel** stops transmission.

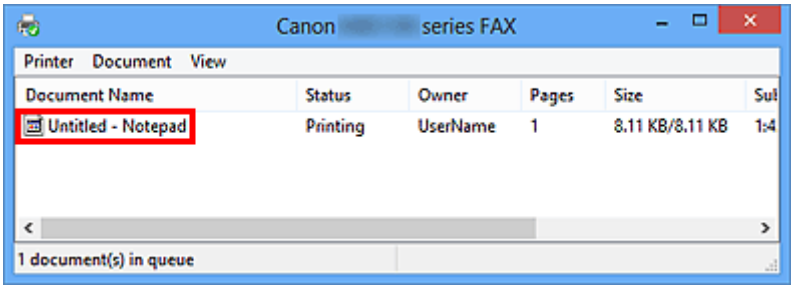

Creating an Address Book (Fax Driver)

By using the address book, you can send a fax by simply specifying a recipient from it.

You can register the recipient's name, fax number and other information in the address book.

Registering a recipient (WAB contact) in the address book

You can register an individual recipient (Contact) in the address book.

1. Open the print settings dialog box of the fax driver.

2. Click **Address Book...** in the displayed dialog box.

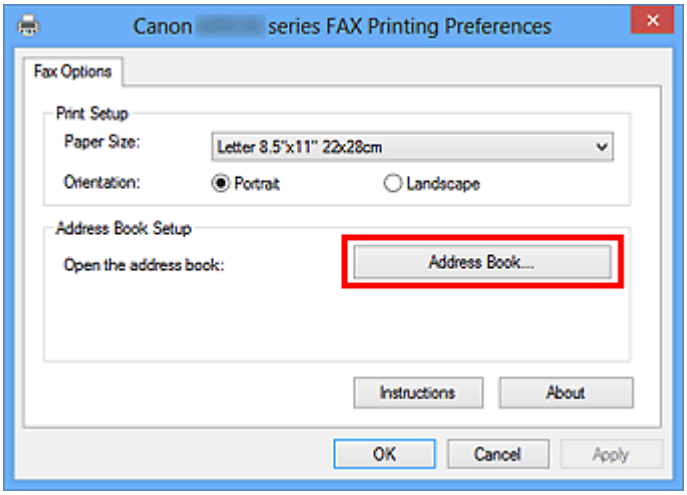

Note

- Once an individual recipient (Contact) is registered in the address book folder (Windows Contacts) as an address book file (.contact file), it can be used in multiple applications. However, you cannot change the address book you use, as only one address book can be created per user.

  Follow the steps below to open Windows Contacts.

  - **Windows 8.1/Windows 8:**

    Select the **Search** charm, then search for "Contacts".

  - **Windows 7/Windows Vista:**

    Select **XXXX (user name)** from the **Start** menu, then double-click **Contacts**.

3. In the **Address Book** dialog box, click **New...**.

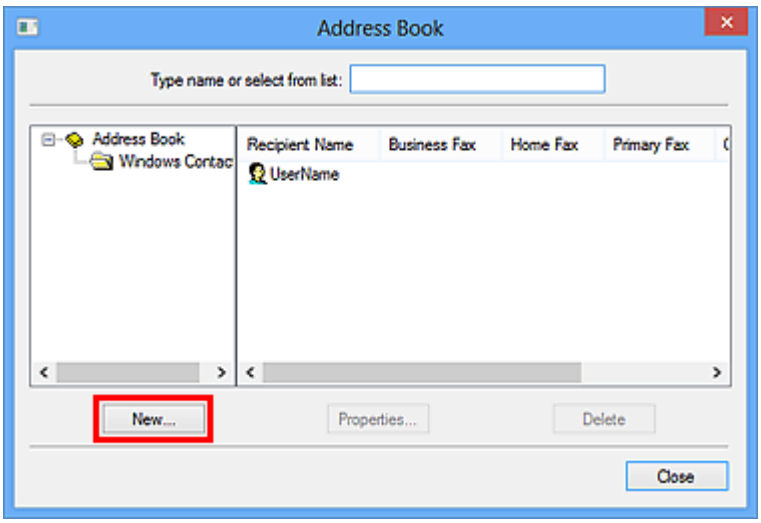

4. Select **Contact** in the **New Entry** dialog box, then click **OK**.

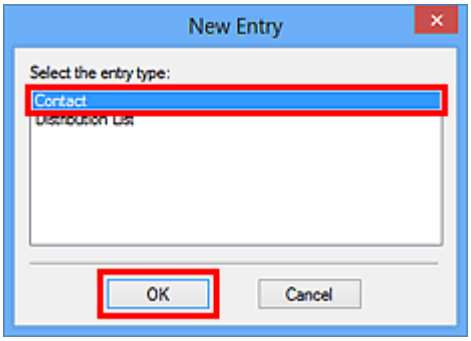

Note

- For faxing, you can only specify the **Contact** (one recipient). You cannot specify a **Distribution List**.

5. On **Name and E-mail** tab of Properties dialog box, enter **First** and **Last**.

   The recipient's name will be printed at the top of the fax received by the recipient.

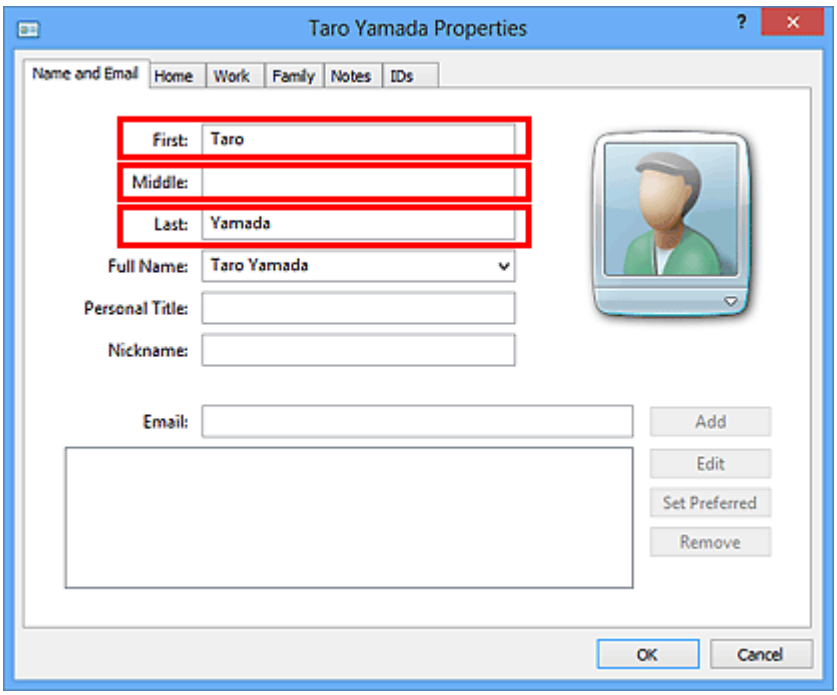

6. Enter the fax number on the **Home** or **Work** tab, then click **OK**.

An individual recipient (Contact) is registered in the address book.

Note

- You can also register a recipient by clicking the **Add to Address Book...** button on the **Send FAX** dialog box after entering the recipient.

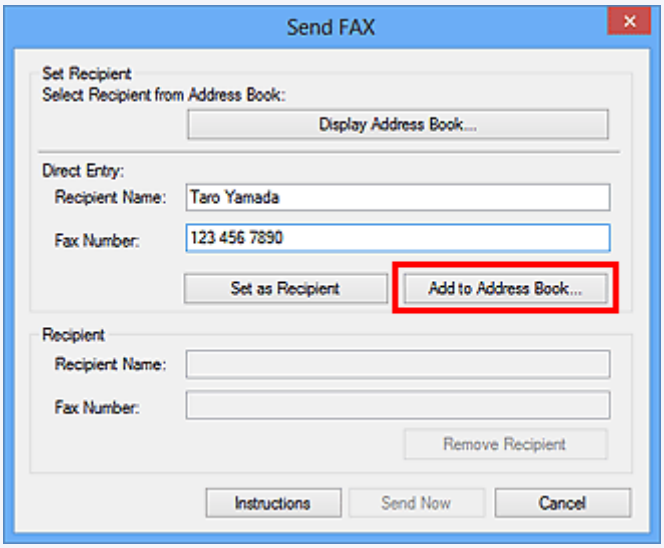

- Add the outside line access number before the fax number as needed.

  (Example: When the outside line access number is "0" and the fax number is "XXX-XXXX", enter "0XXX-XXXX".)

- If you upgrade from Windows XP to Windows Vista, the address book you created in Windows XP may not be reflected in Windows Vista. In this case, open the address book in the following procedure and reflect the information to a new address book.

1. From the **Start** menu, select **Control Panel** > **Appearance and Personalization** > **Folder Options**.
2. Click the **View** tab of the **Folder Options** dialog box, select **Show hidden files and folders** in **Advanced settings**, then click **OK**.
3. From the **Start** menu, select **XXXX (user name)**, then double-click **AppData** > **Roaming** > **Canon** > **MP5** to open the folder.
4. Double-click the ".wab" file.

   The address book will be reflected in Windows Vista automatically.

Related Topic

- Edit or Remove a Recipient from an Address Book (Fax Driver)
- Search for a Recipient in an Address Book (Fax Driver)

Edit or Remove a Recipient from an Address Book (Fax Driver)

You can change the recipients' names, fax numbers and other information, or delete recipients registered in the address book.

Editing Recipients in an address book

1. Open the print settings dialog box of the fax driver.

2. Click **Address Book...** in the displayed dialog box.

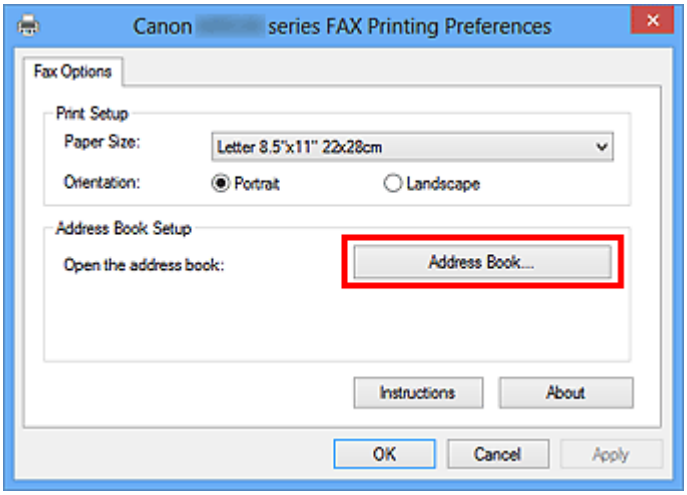

3. Select the recipient you want to edit from the **Address Book** dialog box, then click **Properties...**.

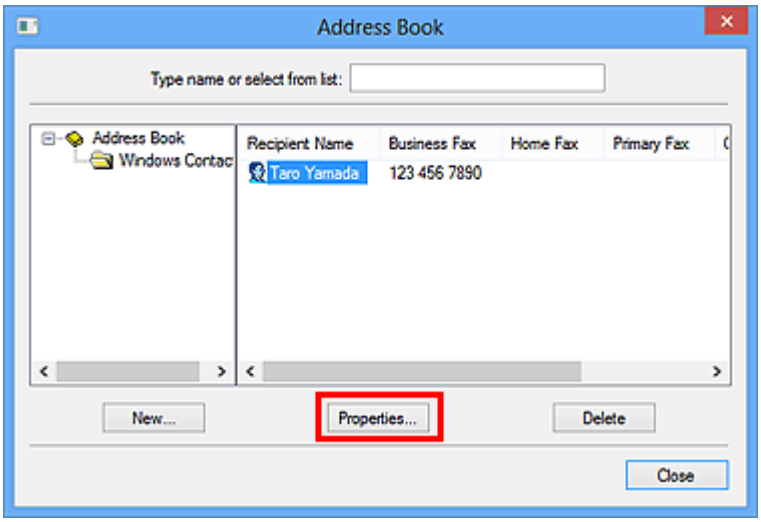

4. Change information as needed on the Properties dialog box, then click **OK**.

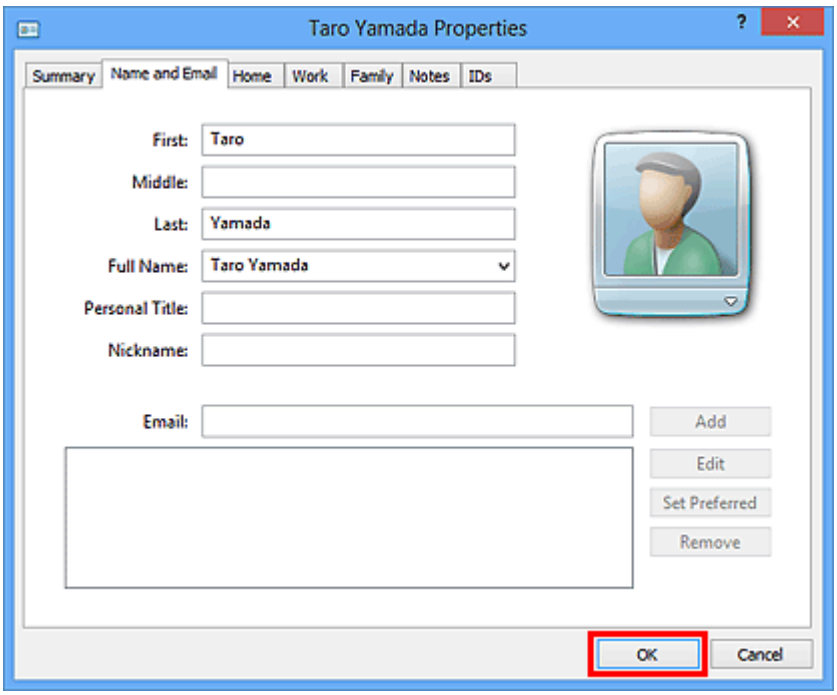

Removing Recipients from an address book

1. Open the print settings dialog box of the fax driver.

2. Click **Address Book...** in the displayed dialog box.

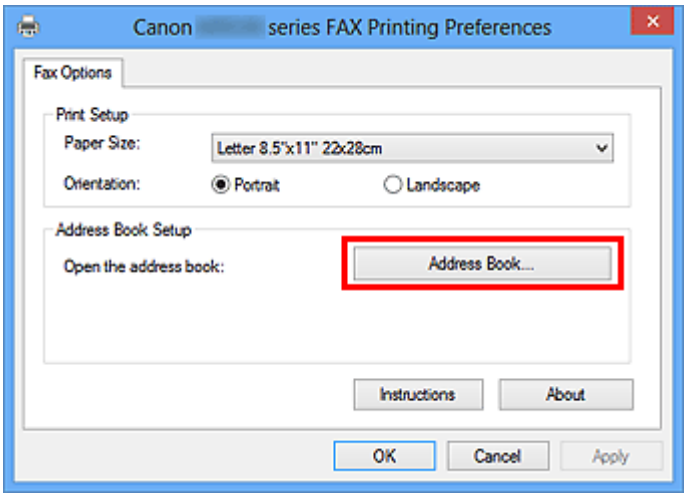

3. Select the recipient you want to delete from the **Address Book** dialog box, then click **Delete**.

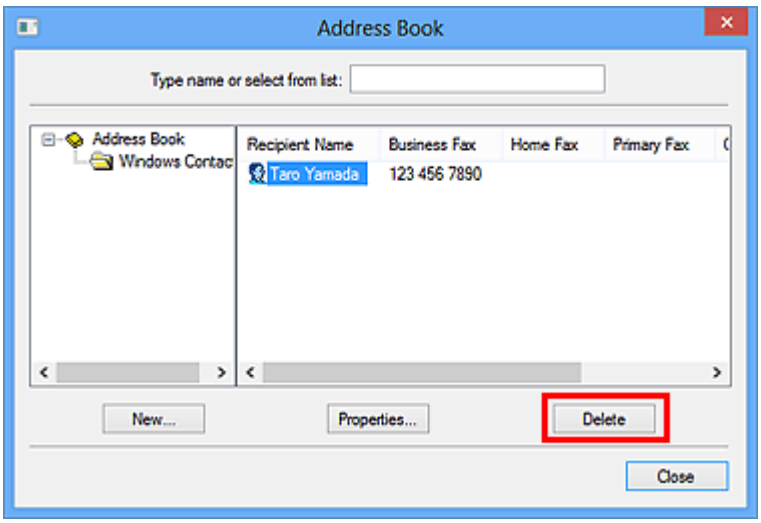

4. When a confirmation message is displayed, click **Yes**.

Search for a Recipient in an Address Book (Fax Driver)

You can search for recipients registered in the address book by name.

1. Open the document you want to fax with an application (such as Notepad), and then click the Print command. (The command is **Print...** on the **File** menu.)

2. In **Select Printer** or **Name** in the **Print** dialog box, select **Canon XXX series FAX** (where "XXX" is the model name).

3. Click **Print** or **OK**.

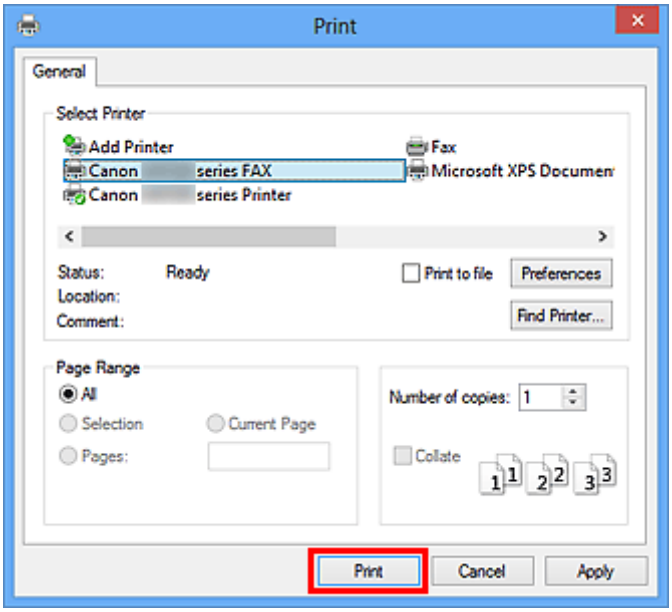

* **Print** dialog box in Notepad

4. Click **Display Address Book...** in **Set Recipient** in the **Send FAX** dialog box.

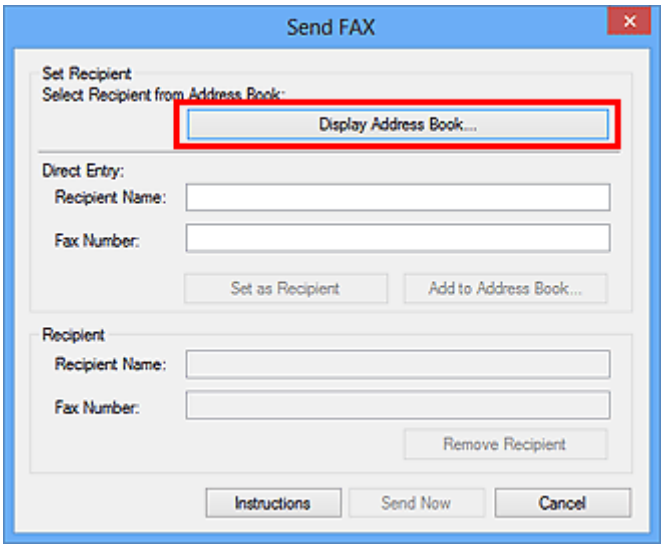

5. Enter the name of the recipient you want to search for in **Search by Recipient** in the **Select Recipient from Address Book** dialog box.

   If the entered name is found, the recipient will be displayed in the contact list with its name selected.

   While the name is selected, click **Set as Recipient** to enter it as the recipient.

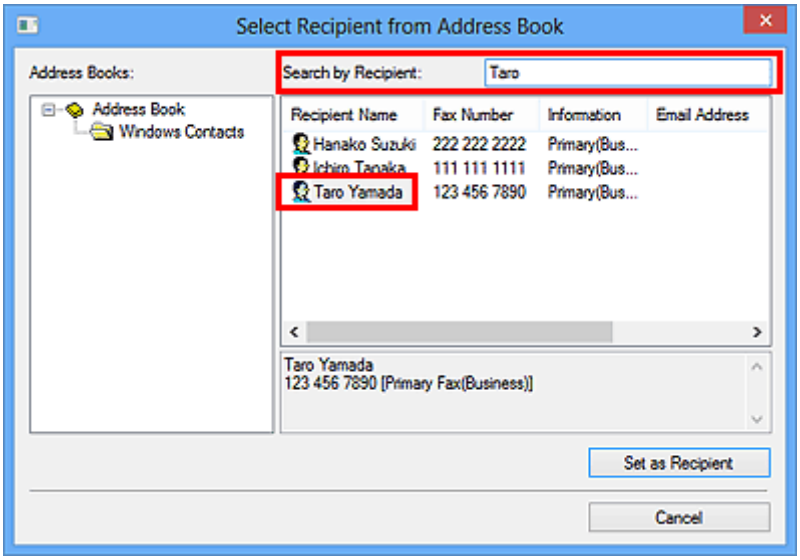

Important

- You cannot search by criteria other than name.

Cannot Send Faxes from Computer

Check 1 Is the power turned on?

You cannot send faxes if the power is turned off. Press the **ON** button to turn the power on.

If you disconnected the power cord without turning off the power (one of the buttons on the operation panel is lit), reconnecting it turns on the power.

If you disconnected the power cord after pressing the **ON** button to turn off the power (no buttons on the operation panel are lit), reconnect it, then press the **ON** button to turn on the power.

If the power was turned off due to power failure, etc., the power is automatically turned on when the power failure is resolved.

Important

- Confirm that all lamps on the operation panel are off before unplugging the power cord, then unplug the power cord.

  If a power failure occurs or you unplug the power cord, all faxes stored in the machine's memory are deleted.

Note

- If the faxes stored in the machine's memory are deleted by a power failure or unplugging the power cord, the list of the faxes deleted from the machine's memory will be printed after turning the machine on.

Check 2 Is a document being sent from memory or a fax being received into memory?

When the message for the transmission/reception is displayed on the machine's LCD (Liquid Crystal Display) monitor, a fax is being sent from/received into machine's memory. Wait until the transmission/reception is complete.

Check 3 Is the telephone line type set correctly?

Check the telephone line type setting and change it as necessary.

Check 4 Is **Dial tone detect** set to **ON**?

Resend the fax after a while.

If you still cannot send the fax, select **OFF** for **Dial tone detect** in **Advanced FAX settings** under **FAX settings**.

Check 5 Is the recipient's fax number correct?

Check the recipient's fax number, then send the document again.

Sending a FAX (Fax Driver)

Note

- For details on how to change the recipients registered in the address book, see "Edit or Remove a Recipient from an Address Book (Fax Driver)."

Check 6 Does an error occur during transmission?

Check if a message is displayed in the computer screen.

If displayed, check the message, then resolve the error.

Check 7 Does a printer error occur?

Check if a message is displayed on the LCD monitor.

If a support code is displayed, see "Support Code List" for your model from Home of the Online Manual.

If no support code is displayed, see "A Message Is Displayed" for your model from Home of the Online Manual.

If you are in a hurry, press the **Stop** button to close the message, then send the fax.

Check 8 Is the telephone line connected correctly?

Reconnect the telephone line cable to the telephone line jack.

If the telephone line is connected correctly, then there is a problem with your telephone line. Contact your telephone company and the manufacturer of your terminal adapter or telephone adapter.

How to Open the Setting Screen of the Fax Driver

The following explains how to display the print settings dialog box or the Properties dialog box of the fax driver from your application or from the fax/printer icon.

Opening the Print Settings Dialog Box of the Fax Driver from an Application

1. Click the Print command in the application.

   In general, you can open the **Print** dialog box by selecting Print from the File menu.

2. Select "your model name," then click **Preferences** (or **Properties**).

   The print settings dialog box of the fax driver appears.

Opening the Print Settings Dialog Box of the Fax Driver from the Fax/Printer Icon

- **Windows 8.1/Windows 8:**

  1. Click the **Settings** charm > **Control Panel** > **Hardware and Sound** > **Devices and Printers**.

  2. Right-click the **Canon XXX series Printer** icon or **Canon XXX series FAX** icon and select **Printing Preferences**, then **Canon XXX series FAX**. (Where "XXX" is the model name.)

- **Windows 7:**

  1. From the **Start** menu, select **Control Panel** > **Hardware and Sound** > **Devices and Printers**.

  2. Right-click the **Canon XXX series Printer** icon or **Canon XXX series FAX** icon and select **Printing Preferences**, then **Canon XXX series FAX**. (Where "XXX" is the model name.)

- **Windows Vista:**

  1. From the **Start** menu, select **Control Panel** > **Hardware and Sound** > **Printers**.

  2. Right-click the **Canon XXX series FAX** icon (where "XXX" is the model name) and select **Printing Preferences...**.

Opening the Properties Dialog Box of the Fax Driver from the Fax/Printer Icon

- **Windows 8.1/Windows 8:**

  1. Click the **Settings** charm > **Control Panel** > **Hardware and Sound** > **Devices and Printers**.

  2. Right-click the **Canon XXX series Printer** icon or **Canon XXX series FAX** icon and select **Printer Properties**, then **Canon XXX series FAX**. (Where "XXX" is the model name.)

- **Windows 7:**

  1. From the **Start** menu, select **Control Panel** > **Hardware and Sound** > **Devices and Printers**.

  2. Right-click the **Canon XXX series Printer** icon or **Canon XXX series FAX** icon and select **Printer Properties**, then **Canon XXX series FAX**. (Where "XXX" is the model name.)

- **Windows Vista:**

  1. From the **Start** menu, select **Control Panel** > **Hardware and Sound** > **Printers**.

  2. Right-click the **Canon XXX series FAX** icon (where "XXX" is the model name) and select **Properties**.

General Notes (Fax Driver)

This fax driver is subject to the following restrictions.

Keep the following points in mind when using the fax driver.

- The fax driver may not work correctly when sending a Microsoft Excel 2002 document as a fax with the **Allow A4/Letter Paper Resizing** option checked in Microsoft Excel 2002. Follow the instructions below to solve the problem:
  1. Click **Options...** from the **Tools** menu.
  2. Uncheck the **Allow A4/Letter Paper Resizing** option on the **International** tab.
- When using a network compatible printer, you cannot send faxes from multiple computers at the same time. If you try to send a fax from a computer while a fax is being sent from another computer, a message appears and your fax cannot be sent.

  Make sure that a fax is not being sent from another computer.
- If you assign the fax driver to the Bluetooth port, you cannot send a fax from the computer.
- You can use the following characters for **Fax Number**:

Character	Explanation
0 - 9 * #	For use in telephone and fax numbers.
, p	To place a pause between numbers.
P	To place a pause at the end of a sequence of numbers.
T	Numbers after the T will be sent as a tone signal.
+ - ( ), space	To make the number easier to read. You cannot insert a space at the front of a number.

  *You cannot use ".", "R", "M", or "E".
- You can enter the following number of characters in **Recipient Name** and **Fax Number**.

  Recipient Name: Up to 16 characters

  Fax Number: Up to 60 characters

  * The number of characters you can enter differs in some regions.
- The fax driver does not work correctly if you uncheck the **Enable printer pooling** option on the **Ports** tab of the **Canon XXX series FAX Properties** dialog box (where "XXX" is the model name). Check that the option is checked.

For details on how to open the **Canon XXX series FAX Properties** dialog box, see "Opening the Properties Dialog Box of the Fax Driver from the Fax/Printer Icon."

Receiving Faxes

- Receiving Faxes
- Changing Paper Settings
- Substitute Reception in Printer's Memory
- Receiving Faxes Using Useful Functions

Receiving Faxes

This section describes the preparation necessary for receiving a fax and how to receive a fax.

Preparing for Receiving a Fax

Prepare for receiving a fax according to the following procedure.

1. Make sure that printer is turned on.

2. Press the **FAX** button.

   The Fax standby screen is displayed.

3. Make sure of the receive mode setting.

   Make sure of the receive mode setting displayed on the Fax standby screen.

   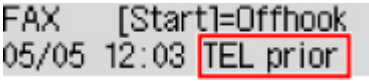

   Note

   - For details on how to change the receive mode:

     Setting Receive Mode

4. Load paper.

   Load the sheets of plain paper.

5. Specify the paper settings as necessary.

   Changing Paper Settings

   This completes the preparation for receiving fax.

   When a fax is received, it is printed on the loaded paper automatically.

Receiving a Fax

Depending on the selected receive mode, the receive operation varies.

Note

- For details on the receive mode:

  Setting Receive Mode

- You can specify the advanced settings of each receive mode.

  For details on the advanced settings of the receive mode:

  Advanced Settings of Receive Mode

- If the printer was not able to print a received fax, the printer stores the unprinted fax in its memory (Substitute Reception).

Substitute Reception in Printer's Memory

When TEL priority mode is selected:

- **When the call is a fax:**

  The telephone will ring when a call incomes.

  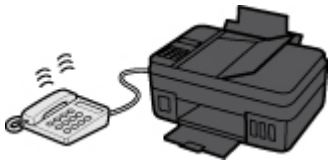

  Pick up the handset. If you hear the fax tone, wait for at least 5 seconds after it stops, then hang up the handset.

  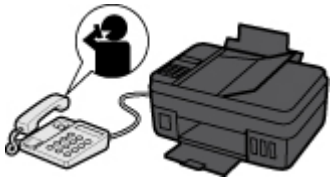

  The printer will receive the fax.

  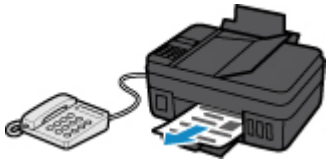

Note

- If the printer will not switch to fax reception, press the **FAX** button, then the **Color** or **Black** button to receive the fax.
- To receive a fax without picking up the handset, set **Manual/auto switch** of the advanced setting to **ON**. **RX start time** allows you to specify the number of seconds until the printer switches to fax reception.
- If you have subscribed to Duplex Ringing service in Hong Kong, the telephone will ring a specified number of times when there is an incoming call with a fax distinctive ring pattern. Then, the printer will switch to fax reception automatically without the handset being picked up.

  The number of times to ring the telephone until switching to fax reception can be changed.
- Set the printer to enable you to initiate fax reception from a connected telephone (remote reception).

  Remote Reception
- **When the answering machine is connected to the printer:**
  - If the answering machine is set to the answering mode, set **User-friendly RX** of the advanced setting to **ON**. If the call is a fax, the printer will receive the fax automatically.
  - If the answering mode is turned off on the answering machine, pick up the handset. If you hear the fax tone, wait for at least 5 seconds after it stops, then hang up the handset.

- If **Manual/auto switch** of the advanced setting is set to **ON**, set **RX start time** to longer than the time before the answering machine starts playing the answering message. After making this setting, we recommend that you call the answering machine using a mobile phone, etc. to confirm that messages are recorded successfully in the answering machine.
- Set your answering machine to answering mode and adjust it as follows:

  - The entire message should be no longer than 15 seconds.

  - In the message, tell your callers how to send a fax.

- **When the call is a voice call:**

  The telephone will ring when a call incomes.

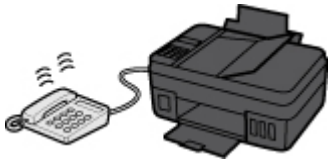

  Pick up the handset, and talk on the telephone.

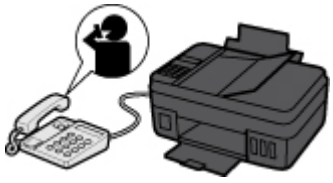

Note

- If the printer unexpectedly switches to fax reception during telephone calls, set **User-friendly RX** of the advanced setting to **OFF**.
- If **Manual/auto switch** of the advanced setting is set to **ON**, you must answer an incoming call by picking up the handset within the time specified in **RX start time**. Otherwise the printer will switch to fax reception.

When Fax only mode is selected:

- **When the call is a fax:**

  The printer will receive the fax automatically.

Note

- If a telephone is connected to the printer, the telephone will ring when a call incomes.
- You can change the number of times to ring the telephone with **Incoming ring** of the advanced setting.

When DRPD or Network switch is selected:

- **When the call is a fax:**

  The telephone will ring when a call incomes.

  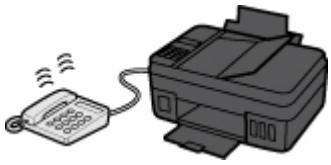

  The printer will receive the fax automatically when the fax ring pattern is detected.

  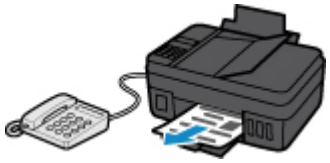

  Note

  - You can change the number of times to ring the telephone.

    Advanced Settings of Receive Mode

- **When the call is a voice call:**

  The telephone will ring when a call incomes.

  When the printer does not detect the fax ring pattern, the telephone will continue ringing.

  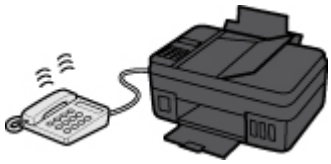

  Pick up the handset, and talk on the telephone.

  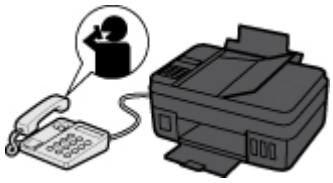

  Note

  - To use this feature, you need to subscribe to a compatible service provided by your telephone company.
  - **For DRPD**

    You need to select the appropriate ring pattern on the printer.

    Setting the DRPD Ring Pattern (US and Canada only)

  - **For Network switch**

    The name of this service varies depending on the country or region of purchase. This setting may not be also available depending on the country or region of purchase.

Changing Paper Settings

This printer prints received faxes to paper loaded in the printer beforehand. You can use the operation panel to change the paper settings for printing faxes. Make sure that the settings are appropriate for the loaded paper.

Important

- If the size of loaded paper is different from that specified in the paper size setting, **Check page size Press [OK]** are displayed on the LCD. In this case, load the same size of paper as that specified in the paper size setting, then press the **OK** button.

  You can also press the **Stop** button to close the message and print the stored documents in the printer's memory later.

  Printing Document in Printer's Memory

- If no paper is loaded, or paper has run out while printing is in progress, the error message for no paper is displayed on the LCD. In this case, load paper and press the **OK** button.

  You can also press the **Stop** button to close the message and print the stored documents in the printer's memory later.

  Printing Document in Printer's Memory

Note

- If the sender sends a document that is larger than Letter-size or Legal-size, such as 11 x 17 inches, the sender's printer may send the fax automatically reduced in size or divided, or send only a part of the original.

1. Make sure that printer is turned on.

2. Press the **FAX** button.

   The Fax standby screen is displayed.

3. Press the **Menu** button.

   The **FAX menu** screen is displayed.

4. Select **FAX paper settings**, then press the **OK** button.

5. Select a setting item, then press the **OK** button.

6. Specify the settings.

   Use the ◄► button to adjust each setting item, then press the **OK** button. The next setting item is displayed.

   The LCD returns to the Fax standby screen when all the settings are complete or when pressing the **FAX** button.

Note

- The * (asterisk) on the LCD indicates the current setting.

Page size

Select the page size from **A4**, **Letter**, **LTR**, or **Legal**.

Note

- Some of page sizes are not available depending on the country or region of purchase.

Media type

The paper type is set to **Plain paper**.

Substitute Reception in Printer's Memory

The printer prints the received fax automatically by default. And furthermore, the printer stores the received fax in its memory. When the faxes are stored in the printer's memory, the **FAX Memory** lamp is lit or flashes.

In the following conditions, the received fax is not printed automatically, only is stored in the printer's memory. (Substitute Reception) Then **Received in memory** is displayed at the Fax standby screen.

- **When Do not print is selected for Received documents in Auto print settings under Fax settings**
- **An error has occurred on the printer:**

  If you select **Print** for **Received documents** in **Auto print settings** under **Fax settings**, a received fax will be printed automatically. However, if any of the following errors occurs, the received fax will not be printed. It will instead be stored in the printer's memory.

  When the error is resolved, the fax stored in the printer's memory is printed automatically.

  - Paper has run out:

    Load paper, then press the **OK** button.
  - A different size of paper from that specified by **Page size** in **FAX paper settings** is loaded:

    Load the same size of paper as that specified by **Page size**, then press the **OK** button.
- **You pressed the Stop button to cancel printing of a fax:**

  Press the **FAX** button to resume printing of the fax.

Important

- When the printer's memory is full, the faxes stored latest overwrite those stored earliest. However, the unprinted faxes are not overwritten.

  Information on Received Faxes
- If the printer's memory is full with the unprinted faxes, the printer cannot receive the faxes. Check the **FAX Memory** lamp regularly, print the faxes, and delete them from the printer's memory.

  Document Stored in Printer's Memory
- If you unplug the power cord, all faxes stored in the printer's memory are deleted. The next time you turn the printer on, press the **OK** button after a confirmation screen is displayed. The list of the faxes deleted from the printer's memory (MEMORY CLEAR REPORT) will be printed.

Information on Received Faxes

By default, received faxes will be printed immediately after they are received.

In addition, faxes will be stored in the printer's memory automatically when they are received.

However, the printer's memory has an upper limit on the number of faxes or subjects it can contain. When the amount of stored fax reaches the upper limit of the printer's memory, faxes stored latest will overwrite those stored earliest.

As long as paper is loaded, the printer will perform printing even when the ink remaining is insufficient. Therefore, in case ink remaining is low, printed faxes may be unclear due to blurring of ink. In such case if the amount of stored faxes has reached its upper limit of the printer's memory, faxes stored in the printer's

memory will be deleted in order from the earliest. As a result, you may not be able to see faxes either using printed material or the printer's memory.

Therefore, if you use the fax capabilities, make sure sufficient ink remains in the ink tank in advance. In addition, we recommend you refill the ink tank early so that ink does not become insufficient while fax printing is in progress. Visually inspect the remaining ink in the printer's ink tank.

Moreover, we recommend you check printed pages immediately after faxes are received. If a fax remains in the printer's memory, you can reprint it after refilling the ink tank.

If [Do not print] is selected for [Received documents] on [Auto print settings] under [FAX settings] on the operation panel of the printer, received faxes will not be printed immediately. Instead, faxes are stored in the printer's memory automatically and you can select and print those stored from the printer's memory. In this setting, the printer does not receive faxes if the printer's memory reaches its upper limit. Thus, stored faxes are not overwritten automatically.

Other Useful Fax Functions

- Document Stored in Printer's Memory
- Using Information Services
- Transmission/Reception of Faxes Using ECM
- Summary of Reports and Lists

Document Stored in Printer's Memory

The faxes will be stored in the printer's memory automatically when they are received. However, printer's memory has an upper limit on the number of faxes or subjects it can contain. When the printer's memory is full, faxes stored latest will overwrite those stored earliest.

Information on Received Faxes

By default, the received faxes will be printed automatically after they are received.

In the following cases, the received faxes are not printed. The unprinted faxes are not overwritten even if the printer receives the faxes anew.

- Paper has run out.
- A different size of paper from that specified by **Page size** in **FAX paper settings** is loaded.
- **Do not print** is selected for **Received documents** in **Auto print settings** under **Fax settings**.
- You pressed the **Stop** button to cancel printing of a received fax.

If the printer's memory is full with the unprinted faxes, the printer cannot receive the faxes. Check the **FAX Memory** lamp regularly, print the faxes, and delete them from the printer's memory.

Printing Document in Printer's Memory
Deleting Document in Printer's Memory

Important

- The printer can store up to max. 50 pages* (max. 20 documents) of faxes in the printer's memory.

  * When using ITU-T No.1 chart (Standard mode)

- If you unplug the power cord of the printer, all faxes stored in the printer's memory are deleted.

Note

- The **FAX Memory** lamp lights, flashes, or is off depending on the faxes stored in the printer's memory.

  OFF: Faxes are not stored in the printer's memory.

  Lights: Printed fax is stored in the printer's memory.

  Flashes: During reception or unprinted fax is stored in the printer's memory.

  * When **Do not print** is selected for **Received documents** in **Auto print settings**, the **FAX Memory** lamp lights even if the unprinted fax is stored in the printer's memory.

- When confirming, printing, or deleting a document stored in the printer's memory, you specify it by its transaction number. If you do not know the transaction number for your target document, print the list of documents (MEMORY LIST) first.

  For details on how to print MEMORY LIST, see Printing Document in Printer's Memory.

Information on Received Faxes

By default, received faxes will be printed immediately after they are received.

In addition, faxes will be stored in the printer's memory automatically when they are received.

However, the printer's memory has an upper limit on the number of faxes or subjects it can contain. When the amount of stored fax reaches the upper limit of the printer's memory, faxes stored latest will overwrite those stored earliest.

As long as paper is loaded, the printer will perform printing even when the ink remaining is insufficient. Therefore, in case ink remaining is low, printed faxes may be unclear due to blurring of ink. In such case if the amount of stored faxes has reached its upper limit of the printer's memory, faxes stored in the printer's memory will be deleted in order from the earliest. As a result, you may not be able to see faxes either using printed material or the printer's memory.

Therefore, if you use the fax capabilities, make sure sufficient ink remains in the ink tank in advance. In addition, we recommend you refill the ink tank early so that ink does not become insufficient while fax printing is in progress. Visually inspect the remaining ink in the printer's ink tank.

Moreover, we recommend you check printed pages immediately after faxes are received. If a fax remains in the printer's memory, you can reprint it after refilling the ink tank.

If [Do not print] is selected for [Received documents] on [Auto print settings] under [FAX settings] on the operation panel of the printer, received faxes will not be printed immediately. Instead, faxes are stored in the printer's memory automatically and you can select and print those stored from the printer's memory. In this setting, the printer does not receive faxes if the printer's memory reaches its upper limit. Thus, stored faxes are not overwritten automatically.

Printing Document in Printer's Memory

You can print a specified document in the printer's memory or print all the received documents in its memory at a time.

When printing a specified document, you specify it by its transaction number. If you do not know the transaction number for your target document, print the list of documents (MEMORY LIST) first.

1. Make sure that printer is turned on.

2. Load paper.

3. Press the **FAX** button.

   The Fax standby screen is displayed.

4. Press the **Menu** button.

   The **FAX menu** screen is displayed.

5. Select **Memory reference**, then press the **OK** button.

   Note

   - If no document is stored in the printer's memory, **No documents in memory** is displayed on the LCD.

6. Select a print menu, then press the **OK** button.

   Print memory list

   You can print a list of the documents in the printer's memory (MEMORY LIST).

   MEMORY LIST shows the transaction number of the unsent or unprinted fax (TX/RX NO.), transaction mode, recipient's number, and the date and time of the transaction.

   A transaction number from "0001" to "4999" on MEMORY LIST indicates a document being sent. A transaction number from "5001" to "9999" on MEMORY LIST indicates a document being received.

   Print specified doc.

   You can specify the document and print it.

   If you select this menu, the document selection screen is displayed.

   Print specified doc.
   TX/RX no. *0001

   Note

   - A transaction number from "0001" to "4999" indicates a document being sent. A transaction number from "5001" to "9999" indicates a document being received.
   - Each mark before the transaction number indicates the following:

     No mark: Indicates a black and white document.

     *: Indicates a color document.

#: Indicates the document during transmission.

&: Indicates the document sent with sequential broadcasting.

- By pressing the # button or the **Tone** button, the transaction number displayed on the LCD is switched to transaction time or fax/telephone number.

Specify the document and print it following the procedure below.

1. Select the transaction number (TX/RX no.) of the document you want to print, then press the **OK** button.
2. Select whether to print only the first page of the document, then press the **OK** button.
   - If you select **Yes**:

     Only the first page of the document will be printed.

     The document is still stored in the printer's memory.
   - If you select **No**:

     All pages of the document will be printed.

     The screen to confirm whether to delete the printed document in the printer's memory is displayed.

     If you select **Yes** and press the **OK** button, the printed document in the printer's memory is deleted.

Note

- If there is not the specified document in the printer's memory, **No document** is displayed, and the printer returns to the previous screen.
- To return to the Fax standby screen, press the **Stop** button.

Print all RX docs

If you select this menu, the confirmation screen is displayed.

You can print all the received documents in the printer's memory.

If you select **Yes** and press the **OK** button, all the documents in the printer's memory will be printed.

Each time a document is printed, the screen to confirm whether to delete the printed document in the printer's memory is displayed.

If you select **Yes** and press the **OK** button, the printed document in the printer's memory is deleted.

Deleting Document in Printer's Memory

You can delete a specified document in the printer's memory or delete all the documents in its memory at a time.

Note

- When deleting a specified document, you specify it by its transaction number (**TX/RX no.**). If you do not know the transaction number for your target document, print the list of documents (MEMORY LIST) first.

  Printing Document in Printer's Memory

1. Make sure that printer is turned on.

2. Press the **FAX** button.

   The Fax standby screen is displayed.

3. Press the **Menu** button.

   The **FAX menu** screen is displayed.

4. Select **Memory reference**, then press the **OK** button.

   Note

   - If no document is stored in the printer's memory, **No documents in memory** is displayed on the LCD.

5. Select a delete menu, then press the **OK** button.

   Del. specified doc.

   You can specify the document and delete it.

   If you select this menu, the document selection screen is displayed.

   Del. specified doc.
   TX/RX no. *0001

   Note

   - A transaction number from "0001" to "4999" indicates a document being sent. A transaction number from "5001" to "9999" indicates a document being received.
   - Each mark before the transaction number indicates the following:

     No mark: Indicates a black and white document.

     *: Indicates a color document.

     #: Indicates the document during transmission.

     &: Indicates the document sent with sequential broadcasting.

- By pressing the # button or the **Tone** button, the transaction number displayed on the LCD is switched to transaction time or fax/telephone number.

Specify the document and delete it following the procedure below.

1. Select the transaction number (**TX/RX no.**) of the document you want to delete, then press the **OK** button.

   The confirmation screen is displayed.

2. Select **Yes**, then press the **OK** button.

   The specified document will be deleted from printer's memory.

   Note

   - If there is not the specified document in the printer's memory, **No document** is displayed, and the printer returns to the previous screen.
   - To return to the Fax standby screen, press the **Stop** button.

Delete all docs

If you select this menu, the confirmation screen is displayed.

You can delete all the documents in the printer's memory.

If you select **Yes** and press the **OK** button, all the documents in the printer's memory will be deleted.

Frequently Asked Questions

Network

- Cannot Find Printer on Network
- Cannot Find Printer while Using Wireless LAN
- Network Key Unknown
- Cannot Print or Connect

For other questions about network, click here.

Print

- Printing Does Not Start
- Paper Is Blank/Printing Is Blurry/Colors Are Wrong/White Streaks Appear
- Print Results Are Unsatisfactory
- List of Support Code for Error (Paper Jams)
- Cannot Print or Connect

Installation

- Cannot Install MP Drivers (Windows)

Fax

- Cannot Send a Fax
- Cannot Receive a Fax, Cannot Print a Fax
- Setting Up the Fax

Error

- An Error Occurs
- Message (Support Code) Appears
- Repairing Your Printer

Examples of Problems

Printer Does Not Work

- Printer Does Not Turn On
- Power Shuts Off By Itself
- LCD Shows Wrong Language
- LCD Is Off
- USB Connection Problems
- Cannot Communicate with Printer via USB

- Printing Does Not Start
- Copying/Printing Stops
- Cannot Print Using AirPrint
- Printing Is Slow
- Ink Is Not Coming Out

- List of Support Code for Error (Paper Jams)
- Paper Does Not Feed Properly/"No Paper" Error
- Print Results Are Unsatisfactory
- Scanning Problems (Windows)
- Scanning Problems (macOS)
- Scan Results Are Unsatisfactory (Windows)
- Scan Results Are Unsatisfactory (macOS)
- Cannot Print/Scan from Smartphone/Tablet

Cannot Set Correctly (Network)

- Cannot Find Printer on Check Printer Settings Screen During Setup (Windows)
- Cannot Find Printer while Using Wireless LAN
- Printer Suddenly Stopped Working for Some Reason
- Network Key Unknown
- Administrator Password Set for Printer Unknown
- Printer Cannot Be Used After Replacing Wireless Router or Changed Router Settings
- Message Appears on Computer During Setup
- Checking Network Information
- Restoring to Factory Defaults

Cannot Set Correctly (Installation)

- Cannot Install MP Drivers (Windows)
- Easy-WebPrint EX Does Not Start or Easy-WebPrint EX Menu Does Not Appear (Windows)
- Updating MP Drivers in Network Environment (Windows)

Error or Message Appears

- An Error Occurs
- Message (Support Code) Appears
- A Message for Faxing Is Displayed on Fax Standby Screen
- List of Support Code for Error
- IJ Scan Utility Error Messages (Windows)
- IJ Scan Utility Lite Error Messages (macOS)
- ScanGear (Scanner Driver) Error Messages (Windows)

Operation Problems

- Network Communication Problems
- Printing Problems
- Problems while Printing/Scanning from Smartphone/Tablet
- Scanning Problems (Windows)
- Scanning Problems (macOS)
- Mechanical Problems
- Installation and Download Problems
- Errors and Messages
- If You Cannot Solve a Problem

Network Settings and Common Problems

Here are frequently asked questions on network. Select a connection method you are using, or you want to use.

Wireless LAN

Cannot Find Printer

- Cannot Find Printer while Using Wireless LAN
- Cannot Find Printer on Check Printer Settings Screen During Setup (Windows)
- Cannot Proceed beyond Printer Connection Screen
- Cannot Find Printer after Searching it on Printer Detection Screen During Setup
- Searching Printer by IP Address or Host Name During Setup
- Error Occurs During Wireless LAN Setup
- Another Printer Found with Same Name
- Reconfiguration Method of Wireless LAN Connection

Cannot Print or Connect

- Printer Suddenly Stopped Working for Some Reason
- Printer Cannot Be Used After Replacing Wireless Router or Changed Router Settings
- Cannot Access to Internet on Wireless LAN from Communication Device
- Connecting Printer and Wireless Router Using Easy wireless connect
- Cannot Connect Smartphone/Tablet to Wireless Router
- Error Occurs During Wireless LAN Setup
- Connects to Another Computer via LAN/Changes from USB to LAN Connection
- Cannot Print or Connect

LAN Setting Tips/Changing LAN Settings

- Network Key Unknown
- Administrator Password Set for Printer Unknown
- Checking Network Information
- Restoring to Factory Defaults
- Checking Wireless Router SSID/Key
- Checking Wireless Router SSID for Smartphone/Tablet
- Privacy Separator/SSID Separator/Network Separation Function
- Default Network Settings
- Connects to Another Computer via LAN/Changes from USB to LAN Connection
- Printing Network Settings
- Reconfiguration Method of Wireless LAN Connection
- Checking Status Code

Printing/Scanning from Smartphone/Tablet

- Connecting Printer and Wireless Router Using Easy wireless connect
- Cannot Connect Smartphone/Tablet to Wireless Router
- Checking Wireless Router SSID for Smartphone/Tablet
- Setting Up Using Smartphone/Tablet
- Cannot Print/Scan from Smartphone/Tablet
- Downloading Canon PRINT Inkjet/SELPHY

Problems while Using Printer

- Message Appears on Computer During Setup
- Printing Is Slow
- Packets Are Sent Constantly (Windows)

Wireless Direct

Cannot Print or Connect

- Printer Suddenly Stopped Working for Some Reason
- Cannot Access to Internet on Wireless LAN from Communication Device
- Cannot Print or Connect

LAN Setting Tips/Changing LAN Settings

- Network Key Unknown
- Administrator Password Set for Printer Unknown
- Checking Network Information
- Restoring to Factory Defaults
- Default Network Settings
- Printing Network Settings
- Reconfiguration Method of Wireless LAN Connection
- Checking Status Code

Printing/Scanning from Smartphone/Tablet

- Cannot Print/Scan from Smartphone/Tablet
- Downloading Canon PRINT Inkjet/SELPHY

Problems while Using Printer

- Message Appears on Computer During Setup
- Printing Is Slow

Network Communication Problems

- Cannot Find Printer on Network
- Network Connection Problems
- Other Network Problems

Cannot Find Printer on Network

While performing printer setup:

- Cannot Find Printer on Check Printer Settings Screen During Setup (Windows)
- Cannot Proceed beyond Printer Connection Screen

While using printer:

- Cannot Find Printer while Using Wireless LAN

Cannot Find Printer on Check Printer Settings Screen During Setup (Windows)

If the printer cannot be found and the **Check Printer Settings** screen appears after searching the printer by **Automatic search** on the **Search for Printers** screen, click **Redetect** and search for the printer again by the IP address on the **Search for Printers** screen.

If the printer has not been found after searching it by the IP address, check network settings.

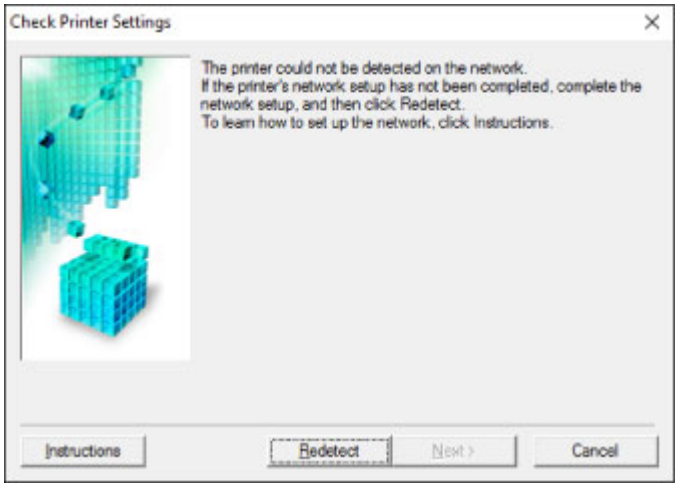

- Cannot Find Printer on Check Printer Settings Screen During Wireless LAN Setup (Windows)-Checking Power Status
- Cannot Find Printer on Check Printer Settings Screen During Wireless LAN Setup (Windows)-Checking PC Network Connection
- Cannot Find Printer on Check Printer Settings Screen During Wireless LAN Setup (Windows)-Checking Printer's Wireless LAN Settings
- Cannot Find Printer on Check Printer Settings Screen During Wireless LAN Setup (Windows)-Checking Wireless LAN Environment
- Cannot Find Printer on Check Printer Settings Screen During Wireless LAN Setup (Windows)-Checking Printer's IP Address
- Cannot Find Printer on Check Printer Settings Screen During Wireless LAN Setup (Windows)-Checking Security Software Settings
- Cannot Find Printer on Check Printer Settings Screen During Wireless LAN Setup (Windows)-Checking Wireless Router Settings

Cannot Find Printer on Check Printer Settings Screen During Wireless LAN Setup (Windows)-Checking Power Status

Are printer and network device (router, etc.) turned on?

Make sure the printer is turned on.

- Confirming that the Power Is On

Make sure network device (router, etc.) is turned on.

If printer or network device is off:

Turn on printer or network device.

It may take a while for the printer and network device to become ready for use once they are turned on. Wait a while after turning on the printer or network device, and then click **Redetect** on the **Check Printer Settings** screen to redetect the printer.

If the printer is found, follow the instructions on the screen to continue to set up network communication.

If printer and network device are on:

If the network devices are on, turn them off and on again.

If above does not solve the problem:

- Cannot Find Printer on Check Printer Settings Screen During Wireless LAN Setup (Windows)-Checking PC Network Connection

Cannot Find Printer on Check Printer Settings Screen During Wireless LAN Setup (Windows)-Checking PC Network Connection

Can you view any web pages on your computer?

Make sure the computer and network device (router, etc.) are configured and the computer is connected to the network.

If you cannot view any web pages:

Click **Cancel** on the **Check Printer Settings** screen to cancel to set up the network communication.

After that, configure the computer and network device.

For the procedures, refer to the instruction manuals supplied with the computer and network device, or contact their manufacturers.

If you can view web pages after configuring the computer and network device, try to set up the network communication from the beginning.

If above does not solve the problem:

- Cannot Find Printer on Check Printer Settings Screen During Wireless LAN Setup (Windows)-Checking Printer's Wireless LAN Settings

Cannot Find Printer on Check Printer Settings Screen During Wireless LAN Setup (Windows)-Checking Printer's Wireless LAN Settings

Is printer set to allow wireless communication?

Make sure the Wi-Fi or Wi-Fi icon is displayed on the LCD.

If icon is not displayed:

The printer is not set to allow wireless communication. Turn on wireless communication on the printer.

If icon is displayed:

- Cannot Find Printer on Check Printer Settings Screen During Wireless LAN Setup (Windows)-Checking Wireless LAN Environment

Q

Cannot Find Printer on Check Printer Settings Screen During Wireless LAN Setup (Windows)-Checking Wireless LAN Environment

A

Is the printer connected to the wireless router?

Use the icon on the LCD to make sure the printer is connected to the wireless router.

If Wi-Fi is displayed:

- Check wireless router configuration.

  After checking the wireless router setting, make sure the printer is not placed far away from the wireless router.

  The printer can be up to 50 m (164 ft) from the wireless router indoors. Make sure the printer is close enough to the wireless router to be used.

  Place the wireless router and printer where there are no obstacles between them. Wireless communication between different rooms or floors is generally poor. Wireless communication can be impeded by building materials containing metal or concrete. If the printer cannot communicate with the computer over a wireless LAN due to a wall, place the printer and the computer in the same room.

  In addition, if a device like a microwave oven that emits radio waves of the same frequency bandwidth as a wireless router is nearby, it may cause interference. Place the wireless router as far away from interference sources as possible.

  Note

  - Though an antenna is attached to most wireless routers, note that some of them have it inside.

- Check wireless router setting.

  The printer and wireless router should be connected using 2.4 GHz bandwidth. Make sure the wireless router for the printer's destination is configured to use 2.4 GHz bandwidth.

  Important

  - Note that some wireless routers distinguish SSIDs by the last alphanumeric character according to their bandwidth (2.4 GHz or 5 GHz) or purpose (for computer or game machine).

  To check the SSID of the wireless router the printer is connected to, print the network settings.

  Printing Network Settings

  For details, see the instruction manual supplied with the wireless router or contact the manufacturer.

After taking measures above, click **Redetect** on the **Check Printer Settings** screen to redetect the printer.

If the printer is found, follow the instructions on the screen to continue to set up network communication.

If the printer cannot be detected, the printer is not connected to the wireless router. Connect the printer to the wireless router.

After connecting the printer to the wireless router, set up the network communication from the beginning.

If Wi-Fi is displayed:

- Cannot Find Printer on Check Printer Settings Screen During Wireless LAN Setup (Windows)-Checking Printer's IP Address

Cannot Find Printer on Check Printer Settings Screen During Wireless LAN Setup (Windows)-Checking Printer's IP Address

Is printer's IP address specified correctly?

If printer's IP address is not specified correctly, the printer may not be found. Make sure whether printer's IP address is not used for another device.

To check the printer's IP address, print out the network settings information.

- Printing Network Settings

If the IP address is not specified correctly:

See If an error screen appears: and specify the IP address.

If the IP address is specified correctly:

- Cannot Find Printer on Check Printer Settings Screen During Wireless LAN Setup (Windows)-Checking Security Software Settings

Cannot Find Printer on Check Printer Settings Screen During Wireless LAN Setup (Windows)-Checking Security Software Settings

Disable block in firewall function temporarily.

The firewall of your security software or operation system for computer may limit communication between the printer and your computer. Check the firewall setting of your security software or operation system or the message shown on your computer and disable block temporarily.

If firewall interferes with setup:

- **If message appears:**

  If a message appears warning that Canon software is attempting to access the network, set the security software to allow access.

  After allowing the software to access, click **Redetect** on the **Check Printer Settings** screen to redetect the printer.

  If the printer is found, follow the instructions on the screen to continue to set up network communication.

- **If no message appears:**

  Cancel the setup, and then set the security software to allow Canon software to access the network.

  The file **Setup.exe** or **Setup64.exe** in the **win** > **Driver** > **DrvSetup** folder on the Setup CD-ROM

  After setting the security software, redo the network communication setup from the beginning.

  After setup is completed, enable firewall.

Note

- For more on firewall settings of your operating system or security software, see instruction manual or contact its manufacturer.

If above does not solve the problem:

Cannot Find Printer on Check Printer Settings Screen During Wireless LAN Setup (Windows)-Checking Wireless Router Settings

Cannot Find Printer on Check Printer Settings Screen During Wireless LAN Setup (Windows)-Checking Wireless Router Settings

Check wireless router settings.

Check wireless router network connection settings, such as IP address filtering, MAC address filtering, encryption key, and DHCP function.

Make sure the same radio channel is assigned to the wireless router and the printer.

To check the settings of the wireless router, see the instruction manual supplied with the wireless router or contact the manufacturer.

In addition, make sure the wireless router you are using is configured to use 2.4 GHz bandwidth.

Important

- Depending on the wireless router, note that different SSID is assigned for a bandwidth (2.4 GHz or 5 GHz) or its usage (for PC or game machine) using alphanumeric characters at the end of SSID.

After checking the wireless router settings, click **Redetect** on the **Check Printer Settings** screen to redetect the printer.

If the printer is found, follow the instructions on the screen to continue to set up network communication.

Q

Cannot Proceed beyond Printer Connection Screen

A

If you cannot proceed beyond the **Printer Connection** screen, check the following.

Check1 Make sure USB cable is securely plugged in to printer and computer.

Connect the printer and the computer using a USB cable as the illustration below. The USB port is located at the back of the printer.

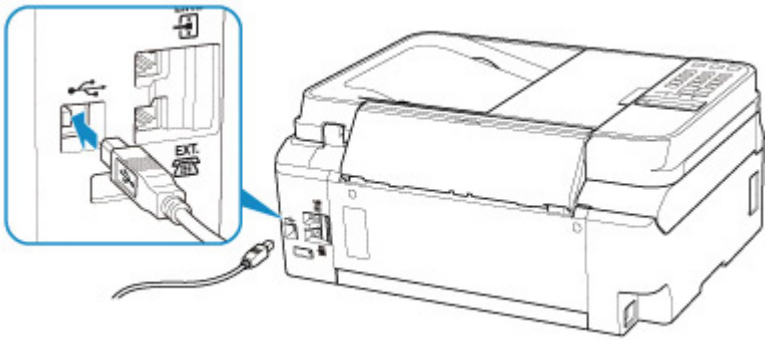

Important

- Connect the "Type-B" terminal to the printer with the notched side facing LEFT. For details, refer to the instruction manual supplied with the USB cable.

Check2 Follow procedure below to connect printer and computer again.

Important

- For macOS, make sure the lock icon is on the lower left of the **Printers & Scanners** screen.

  If the icon (locked) is displayed, click the icon to unlock. (The administrator name and the password are necessary to unlock.)

1. Unplug USB cable from printer and computer and connect it again.
2. Make sure no printer operation is in progress and turn it off.
3. Turn on printer.

Check3 If you cannot resolve problem, follow procedure below to reinstall MP Drivers.

- For Windows:
  1. Click **Cancel**.
  2. Click **Back to Top** on **Setup Canceled** screen.
  3. Click **Exit** on **Start Setup** screen and finish setup.
  4. Turn off printer.

5. Restart computer.
6. Make sure you have no application software running.
7. Perform setup on web page.

Note

- You can use the Setup CD-ROM to redo setup.

- For macOS:
  1. Click **Next**.
     - If the screen telling you that installation has not been completed appears, click **Abort** on displayed screen and finish setup.
     - If the **Connection failed.** screen appears:
       1. Click **Next**.
       2. Click **Next** on displayed screen.
       3. Click **Back to Top** on **Select Printer** screen.
       4. Click **Exit** on **Start Setup** screen and finish setup.
  3. Turn off printer.
  4. Restart computer.
  5. Make sure you have no application software running.
  6. Perform setup on web page.

Cannot Find Printer while Using Wireless LAN

Check1 Make sure printer is turned on.

If not, make sure the printer is securely plugged in and press **ON** button to turn on.

The **ON** lamp flashes while the printer is initializing. Wait until the **ON** lamp stops flashing and remains lit.

Check2 Check the Wi-Fi icon on LCD .

The Wi-Fi icon appears when you switch a mode by pressing the **COPY** button or other ones.

If the icon is not displayed, select **Active** for **WLAN activ./inactiv.** in **Wireless LAN** under **LAN settings** under **Device settings** from the setup menu.

If the Wi-Fi icon is displayed, see Check 3 or later checking items to make sure whether printer setup is complete or the settings of wireless router to connect are correct.

Check3 Make sure printer setup is complete on the computer.

If it is not, perform setup.

- For Windows:

  Perform setup using the Setup CD-ROM or from the web page.

- For macOS:

  Perform setup from the web page.

Note

- IJ Network Device Setup Utility allows you to diagnose and repair the network status. Download it from the web page.
  - For Windows
  - For macOS

Check4 Make sure printer and wireless router network settings match.

Make sure the network settings of the printer (e.g. wireless router name, SSID, network key, etc.) are identical with those of the wireless router.

To check the settings of the wireless router, refer to the instruction manual provided with it or contact its manufacturer.

Note

- Use 2.4 GHz frequency band to connect to a wireless router. Match the SSID set for the printer with that for 2.4 GHz frequency band of the wireless router.

To check the SSID set for the printer, print out the network setting information.

- Printing Network Settings

Note

- IJ Network Device Setup Utility allows you to diagnose and repair the network status.

  Select the link below to download IJ Network Device Setup Utility and install it.

  - Checking Printer Connection Status Using IJ Network Device Setup Utility

  See below for starting up IJ Network Device Setup Utility.

  - For Windows:
    - Starting Up IJ Network Device Setup Utility
  - For macOS:
    - Starting Up IJ Network Device Setup Utility

Check5 Make sure the printer is not placed too far away from the wireless router.

If the distance between the printer and wireless router is too far, wireless communication becomes poor. Place the printer and wireless router close to each other.

Note

- Though an antenna is attached to most wireless routers, note that some of them have it inside.

Check6 Make sure wireless signal is strong. Monitor signal strength and move printer and wireless router as necessary.

Place the wireless router and printer where there are no obstacles between them. Wireless communication between different rooms or floors is generally poor. Wireless communication can be impeded by building materials containing metal or concrete. If the printer cannot communicate with the computer over a wireless LAN due to a wall, place the printer and the computer in the same room.

In addition, if a device like a microwave oven that emits radio waves of the same frequency bandwidth as a wireless router is nearby, it may cause interference. Place the wireless router as far away from interference sources as possible.

Check the signal strength on the LCD.

- LCD and Operation Panel

Note

- IJ Network Device Setup Utility allows you to diagnose and repair the network status.

  Select the link below to download IJ Network Device Setup Utility and install it.

  - Checking Printer Connection Status Using IJ Network Device Setup Utility

  See below for starting up IJ Network Device Setup Utility.

  - For Windows:
    - Starting Up IJ Network Device Setup Utility
  - For macOS:
    - Starting Up IJ Network Device Setup Utility

Check7 Make sure the computer is connected to the wireless router.

For more on how to check the computer settings or connection status, see your computer instruction manual or contact its manufacturer.

Note

- If you use a smartphone or tablet, make sure the Wi-Fi is enabled on the device.

Check8 Make sure **Enable bidirectional support** is selected in the **Ports** sheet of the properties dialog box of the printer driver. (Windows)

If not, select it to enable bidirectional support.

Check9 Make sure security software's firewall is off.

If your security software's firewall is on, a message may appear warning you that Canon software is attempting to access the network. If this warning message appears, set security software to always allow access.

If you are using any programs that switch between network environments, check their settings. Some programs use a firewall by default.

Check10 If printer is connected to an AirPort Base Station via LAN, make sure you use alphanumeric characters for network identifier (SSID). (macOS)

If the problem is not resolved, redo setup.

- For Windows:

  Perform setup using the Setup CD-ROM or from the web page.

- For macOS:

  Perform setup from the web page.

Network Connection Problems

- Printer Suddenly Stopped Working for Some Reason
- Network Key Unknown
- Printer Cannot Be Used After Replacing Wireless Router or Changed Router Settings

Printer Suddenly Stopped Working for Some Reason

- Cannot Communicate with Printer Following Network Settings Change
- Cannot Communicate with Printer via Wireless LAN
- Cannot Communicate with Printer Using Wireless Direct
- Cannot Print, Scan, or Fax from a Computer Connected to the Network

Q Cannot Communicate with Printer Following Network Settings Change

A

It may take a while for the computer to obtain an IP address, or you may need to restart your computer.

Make sure the computer has obtained a valid IP address, and try again to find the printer.

Q Cannot Communicate with Printer via Wireless LAN

A

Check1 Check the power status of printer, network devices (e.g. wireless router), and smartphone/tablet.

Turn on the printer or devices.

If the power is already turned on, turn it off and on again.

It may be necessary to resolve wireless router problems (e.g. update interval of a key, problems of DHCP update interval, energy saving mode, etc.) or to update the wireless router firmware.

For details, contact the manufacturer of your wireless router.

Check2 Can you view any web pages on your computer?

Make sure your computer is connected to the wireless router properly.

For more on checking computer settings or connection status, see the instruction manual supplied with the wireless router or contact the manufacturer.

Check3 Is the printer connected to the wireless router?

Use the icon on the LCD to check the connection status between the printer and wireless router. If the Wi-Fi icon is not displayed, wireless LAN is disabled. Turn on wireless communication on the printer.

Check4 Make sure the printer and wireless router network settings match.

Make sure the network settings of the printer (e.g. wireless router name, SSID, network key, etc.) are identical with those of the wireless router.

To check the settings of the wireless router, refer to the instruction manual provided with it or contact its manufacturer.

Note

- Use 2.4 GHz frequency band to connect to a wireless router. Match the SSID set for the printer with that for 2.4 GHz frequency band of the wireless router.

To check the current network settings of the printer, print out the network setting information.

Printing Network Settings

Note

- IJ Network Device Setup Utility allows you to diagnose and repair the network status.

  Select the link below to download IJ Network Device Setup Utility and install it.

  Checking Printer Connection Status Using IJ Network Device Setup Utility

  See below for starting up IJ Network Device Setup Utility.

  - For Windows:

    Starting Up IJ Network Device Setup Utility

  - For macOS:

    Starting Up IJ Network Device Setup Utility

Check5 Make sure the printer is not placed too far away from the wireless router.

If the distance between the printer and wireless router is too far, wireless communication becomes poor. Place the printer and wireless router close to each other.

Note

- Though an antenna is attached to most wireless routers, note that some of them have it inside.

Check6 Make sure wireless signal is strong. Monitor signal status and move printer and wireless router as necessary.

Place the wireless router and printer where there are no obstacles between them. Wireless communication between different rooms or floors is generally poor. Wireless communication can be impeded by building materials containing metal or concrete. If the printer cannot communicate with the computer over a wireless LAN due to a wall, place the printer and the computer in the same room.

In addition, if a device like a microwave oven that emits radio waves of the same frequency bandwidth as a wireless router is nearby, it may cause interference. Place the wireless router as far away from interference sources as possible.

Check the signal strength on the LCD.

LCD and Operation Panel

Note

- IJ Network Device Setup Utility allows you to diagnose and repair the network status.

  Select the link below to download IJ Network Device Setup Utility and install it.

  Checking Printer Connection Status Using IJ Network Device Setup Utility

  See below for starting up IJ Network Device Setup Utility.

  - For Windows:

Starting Up IJ Network Device Setup Utility

- For macOS:

  Starting Up IJ Network Device Setup Utility

Check7 Make sure you are using a valid channel.

Usable wireless channels may be limited depending on wireless network device used by your computer. See the instruction manual provided with your computer or wireless network device to check usable wireless channels.

Check8 Make sure channel set on wireless router is a usable channel as confirmed in Check 7.

If it is not, change the channel set on the wireless router.

Check9 Make sure security software's firewall is off.

If your security software's firewall is on, a message may appear warning you that Canon software is attempting to access the network. If this warning message appears, set security software to always allow access.

If you are using any programs that switch between network environments, check their settings. Some programs use a firewall by default.

Check10 If printer is connected to an AirPort Base Station via LAN, make sure you use alphanumeric characters for network identifier (SSID). (macOS)

If the problem is not resolved, redo setup.

- For Windows:

  Perform setup using the Setup CD-ROM or from the web page.

- For macOS:

  Perform setup from the web page.

- **Positioning:**

  Make sure there are no obstacles between the wireless router and the printer.

Q Cannot Communicate with Printer Using Wireless Direct

A

Check1 Check the power status of printer and other devices (smartphone or tablet).

Turn on the printer or devices.

If the power is already turned on, turn it off and on again.

Check2 Check printer settings.

Select **LAN settings** > **Wireless Direct** > **Wireless Direct set.** > **Switch WL Direct** in this order and select **Yes**.

Check3 Check the settings of your device (smartphone/tablet).

Make sure wireless LAN is enabled on your device.

For details, refer to your device's instruction manual.

Check4 Make sure printer is selected as connection for device (e.g. smartphone or tablet).

Select the identifier for Wireless Direct (SSID) specified for the printer as the connection destination for devices.

Check the destination on your device.

For details, refer to your device's instruction manual or visit the manufacturer's website.

To check the identifier for Wireless Direct (SSID) specified for the printer, print out the network setting information of the printer.

Printing Network Settings

Check5 Have you entered the proper password specified for the Wireless Direct?

To check the password specified for the printer, print out the network setting information of the printer.

Printing Network Settings

Check6 Make sure the printer is not placed too far away from the device.

If the distance between the printer and device is too far, wireless communication becomes poor. Place the printer and device close to each other.

Check7 Make sure 5 devices are already connected.

Wireless Direct does not allow more than 5 devices to be connected.

Q Cannot Print, Scan, or Fax from a Computer Connected to the Network

A

Check1 Make sure the computer is connected to the wireless router.

For more on how to check the computer settings or connection status, see your computer instruction manual or contact its manufacturer.

Check2 If MP Drivers are not installed, install them. (Windows)

Install the MP Drivers using the Setup CD-ROM or install them from the Canon website.

Check3 Make sure wireless router does not restrict which computers can access it.

For more on connecting to and setting up your wireless router, see the wireless router instruction manual or contact its manufacturer.

Note

- To check the MAC address or IP address of your computer, see Checking Computer IP Address or MAC Address.

Network Key Unknown

- WPA/WPA2 or WEP Key Set for Wireless Router Unknown, Cannot Connect
- Setting an Encryption Key

Q WPA/WPA2 or WEP Key Set for Wireless Router Unknown, Cannot Connect

A

For more on setting up a wireless router, see the instruction manual provided with the wireless router or contact its manufacturer. Make sure your computer can communicate with the wireless router.

Note

- IJ Network Device Setup Utility allows you to diagnose and repair the network status.

  Select the link below to download IJ Network Device Setup Utility and install it.

  - Checking Printer Connection Status Using IJ Network Device Setup Utility

  See below for starting up IJ Network Device Setup Utility.

  - For Windows:
    - Starting Up IJ Network Device Setup Utility
  - For macOS:
    - Starting Up IJ Network Device Setup Utility

Q Setting an Encryption Key

A

For more on setting up a wireless router, see the instruction manual provided with the wireless router or contact its manufacturer. Make sure your computer can communicate with the wireless router.

Note

- IJ Network Device Setup Utility allows you to diagnose and repair the network status.

  Select the link below to download IJ Network Device Setup Utility and install it.

  - Checking Printer Connection Status Using IJ Network Device Setup Utility

  See below for starting up IJ Network Device Setup Utility.

  - For Windows:
    - Starting Up IJ Network Device Setup Utility
  - For macOS:
    - Starting Up IJ Network Device Setup Utility

Selecting WPA, WPA2, or WPA/WPA2 is recommended for security reason. If your wireless router is compatible with WPA/WPA2, you can also use WPA2 or WPA.

- **Using WPA/WPA2 (Windows)**

  The authentication method, passphrase, and dynamic encryption type must be the same for the wireless router, the printer, and your computer.

  Enter the passphrase configured on the wireless router (a sequence of between 8 and 63 alphanumeric characters, or a 64-character hexadecimal number).

  Either TKIP (basic encryption) or AES (secure encryption) is selected automatically as the dynamic encryption method.

  For details, see If WPA/WPA2 Details Screen Appears.

  Note

  - This printer supports WPA/WPA2-PSK (WPA/WPA2-Personal) and WPA2-PSK (WPA2-Personal).

- **Using WEP**

  The key length, key format, key to use (one of 1 to 4), and authentication method must be the same for the wireless router, the printer, and your computer.

  To communicate with a wireless router that uses automatically generated WEP keys, you must set the printer to use the key generated by the wireless router, entering it in hexadecimal format.

  - For Windows:

    When the **WEP Details** screen appears after you click **Search...** on the **Network Settings (Wireless LAN)** screen in IJ Network Device Setup Utility, follow the on-screen instructions to set the WEP key length, format, and the number.

    For details, see If WEP Details Screen Appears.

  Note

  - If the printer is connected to an AirPort Base Station via LAN:

    If the printer is connected to an AirPort Base Station via a LAN, check the settings in **Wireless Security** of **AirPort Utility**.

    - Select **64 bit** if **WEP 40 bit** is selected for key length in AirPort Base Station.
    - Select **1** for **Key ID**. Otherwise, computer will not be able to communicate with printer via the wireless router.

Printer Cannot Be Used After Replacing Wireless Router or Changed Router Settings

When you replace a wireless router, redo the network setup for the printer.

- For Windows:

  Perform setup using the Setup CD-ROM or from the web page.

- For macOS:

  Perform setup from the web page.

Note

- IJ Network Device Setup Utility allows you to diagnose and repair the network status.

  Select the link below to download IJ Network Device Setup Utility and install it.

  Checking Printer Connection Status Using IJ Network Device Setup Utility

  See below for starting up IJ Network Device Setup Utility.

  - For Windows:

    Starting Up IJ Network Device Setup Utility

  - For macOS:

    Starting Up IJ Network Device Setup Utility

If this does not solve the problem, see below.

Cannot Communicate with Printer After Enabling MAC/IP Address Filtering or Encryption Key on Wireless Router

With Encryption On, Cannot Communicate with Printer After Changing Encryption Type at Wireless Router

Cannot Communicate with Printer After Enabling MAC/IP Address Filtering or Encryption Key on Wireless Router

Check1 Check wireless router setting.

To check the wireless router setting, see the instruction manual provided with the wireless router or contact its manufacturer. Make sure the computer and the wireless router can communicate with each other under this setting.

Check2 If filtering MAC addresses or IP addresses at wireless router, check that MAC addresses or IP addresses for computer, network device, and printer are registered.

Check3 If using WPA/WPA2 or WEP key, make sure encryption key for computer, network device, and printer matches key set for wireless router.

Not only the WEP key itself, but also the key length, key format, the key ID to use, and the authentication method must be the same for the printer, the wireless router, and the computer.

For details, see Setting an Encryption Key.

Q With Encryption On, Cannot Communicate with Printer After Changing Encryption Type at Wireless Router

A

If you change the encryption type for the printer and it subsequently cannot communicate with the computer, make sure the encryption type for the computer and the wireless router matches the type set for the printer.

- Cannot Communicate with Printer After Enabling MAC/IP Address Filtering or Encryption Key on Wireless Router

Other Network Problems

- Checking Network Information
- Restoring to Factory Defaults

Checking Network Information

- Checking Printer IP Address or MAC Address
- Checking Computer IP Address or MAC Address
- Checking Communication Between the Computer, the Printer, and the Wireless Router
- Checking Network Setting Information

Q Checking Printer IP Address or MAC Address

A

To check the printer's IP Address or MAC address, print out the network settings information.

- Printing Network Settings

For Windows, you can check the network setting information on the computer screen.

- Canon IJ Network Device Setup Utility Screen

Q Checking Computer IP Address or MAC Address

A

To check the IP Address or MAC address of your computer, follow the instructions below.

- For Windows:
  1. Select **Command Prompt** as shown below.

     In Windows 10, right-click **Start** button and select **Command Prompt**.

     In Windows 8.1, select **Command Prompt** from the **Start** screen. If **Command Prompt** is not displayed on the **Start** screen, select the **Search** charm and search for "**Command Prompt**".

     In Windows 7, click **Start** > **All Programs** > **Accessories** > **Command Prompt**.
  2. Enter "ipconfig/all" and press **Enter**.

     The IP address and MAC address of your computer appear. If your computer is not connected to a network, the IP address does not appear.
- For macOS:
  1. Select **System Preferences** from Apple menu, and then click **Network**.
  2. Make sure network interface used by computer is selected, and then click **Advanced**.

     Make sure **Wi-Fi** is selected as network interface.
  3. Check the IP address or MAC address.

     Click **TCP/IP** to check the IP address.

     Click **Hardware** to check the MAC address.

Q Checking Communication Between the Computer, the Printer, and the Wireless Router

A

Perform a ping test to check if communication is taking place.

- For Windows:
  1. Select **Command Prompt** as shown below.

     In Windows 10, right-click **Start** button and select **Command Prompt**.

     In Windows 8.1, select **Command Prompt** from the **Start** screen. If **Command Prompt** is not displayed on the **Start** screen, select the **Search** charm and search for "**Command Prompt**".

     In Windows 7, click **Start** > **All Programs** > **Accessories** > **Command Prompt**.
  2. Type the ping command and press **Enter**.

     The ping command is as follows: ping XXX.XXX.XXX.XXX

     "XXX.XXX.XXX.XXX" is the IP address of the target device.

     If communication is taking place, a message like the one shown below appears.

     Reply from XXX.XXX.XXX.XXX: bytes=32 time=10ms TTL=255

     If **Request timed out** appears, communication is not taking place.
- For macOS:
  1. Start **Network Utility** as shown below.

     Select **Computer** from **Go** menu of Finder, double-click **Macintosh HD** > **System** > **Library** > **CoreServices** > **Applications** > **Network Utility**.
  2. Click **Ping**.
  3. Make sure **Send only XX pings** (XX are numbers) is selected.
  4. Enter IP address of target printer or target wireless router in **Enter the network address to ping**.
  5. Click **Ping**.

     "XXX.XXX.XXX.XXX" is the IP address of the target device.

     A message such as the following appears.

     64 bytes from XXX.XXX.XXX.XXX: icmp_seq=0 ttl=64 time=3.394 ms

     64 bytes from XXX.XXX.XXX.XXX: icmp_seq=1 ttl=64 time=1.786 ms

     64 bytes from XXX.XXX.XXX.XXX: icmp_seq=2 ttl=64 time=1.739 ms

     --- XXX.XXX.XXX.XXX ping statistics ---

     3 packets transmitted, 3 packets received, 0% packet loss

     If packet loss is 100%, communication is not taking place. Otherwise, computer is communicating with target device.

Checking Network Setting Information

To check the printer's network settings information, print out the network settings information.

- Printing Network Settings

Restoring to Factory Defaults

Important

- For Windows:

  Initialization erases all network settings on the printer, making printing, scanning, or faxing operation from a computer over a network impossible. To use the printer over a network again after restoring it to the factory defaults, redo setup using the Setup CD-ROM or from the web page.

- For macOS:

  Initialization erases all network settings on the printer, making printing, scanning, or faxing operation from a computer over a network impossible. To use the printer over a network again after restoring it to the factory defaults, redo setup from the web page.

Initialize the network setting using the printer's operation panel.

- Reset setting

Printing Problems

- Printing Does Not Start
- Ink Is Not Coming Out
- Ink Runs Out Fast
- Paper Does Not Feed Properly/"No Paper" Error
- Print Results Are Unsatisfactory

Printing Does Not Start

Check1 Make sure printer is turned on.

If not, make sure the printer is securely plugged in and press **ON** button to turn on.

The **ON** lamp flashes while the printer is initializing. Wait until the **ON** lamp stops flashing and remains lit.

Note

- If you are printing large data such as photos or other graphics, printing may take longer to start. The **ON** lamp flashes while the computer is processing data and sending it to the printer. Wait until printing starts.

Check2 Make sure printer is properly connected to computer.

If you are using a USB cable, make sure it is securely connected to both the printer and the computer. When the USB cable is securely plugged in, check the following:

- If you are using a relay device such as a USB hub, disconnect it, connect the printer directly to the computer, and retry the printing. If printing starts normally, there is a problem with the relay device. Contact the vendor of the relay device.
- There could also be a problem with the USB cable. Replace the USB cable and retry the printing.

If you use the printer over a LAN, make sure the printer is correctly set up for network use.

Cannot Find Printer while Using Wireless LAN

Note

- IJ Network Device Setup Utility allows you to diagnose and repair the network status. Download it from the web page.

  For Windows
  For macOS

Check3 Make sure paper settings match information set for rear tray.

If the paper settings do not match the information set for the rear tray, an error message appears on the LCD. Follow the instructions on the LCD to solve the problem.

Note

- You can select whether the message which prevents misprinting is displayed.
  - To change the message view setting when printing or copying using the printer's operation panel:

    Feed settings

  - To change the message view setting when printing using the printer driver:

    Changing the Printer Operation Mode (Windows)

Changing the Printer Operation Mode (macOS)

Check4 If printing from a computer, delete jobs stuck in print queue.

- For Windows:

  Deleting the Undesired Print Job

- For macOS:

  Deleting the Undesired Print Job

Check5 Is your printer's printer driver selected when printing?

The printer will not print properly if you are using a printer driver for a different printer.

- For Windows:

  Make sure "Canon XXX series" (where "XXX" is your printer's name) is selected in the Print dialog box.

  Note

  - To make the printer the one selected by default, select **Set as Default Printer**.

- For macOS:

  Make sure your printer's name is selected in **Printer** in the Print dialog.

  Note

  - To make the printer the one selected by default, select the printer for **Default printer**.

Check6 Check the size of print data. (Windows)

If the print data is large, part of image data may be cut off and printing failure may occur.

Click **Print Options** on **Page Setup** sheet of the printer driver. Then set **Prevention of Print Data Loss** to **On** in the dialog that appears.

Important

- Selecting **On** for **Prevention of Print Data Loss** may reduce print quality.

Check7 If printing from a computer, restart the computer.

Restart the computer and try printing again.

Ink Is Not Coming Out

Check1 Check the remaining ink level.

When an ink tank runs out of ink, refill the ink tank.

If the remaining ink level is below the lower limit line (A), refill the ink tank with the corresponding color of ink.

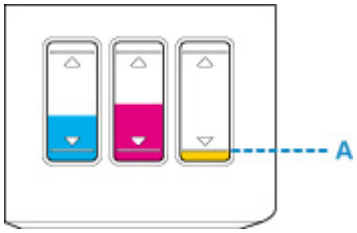

Check2 Are the print head nozzles clogged?

Print the nozzle check pattern to determine whether the ink ejects properly from the print head nozzles.

For details on printing the nozzle check pattern, print head cleaning, and print head deep cleaning, see If Printing Is Faint or Uneven.

- If nozzle check pattern is not printed correctly:

  After performing the print head cleaning, print the nozzle check pattern and examine the pattern.

  Cleaning

- If problem is not resolved after performing print head cleaning twice:

  Perform print head deep cleaning.

  Deep Cleaning

- If problem is not resolved after performing print head deep cleaning:

  Perform ink flush.

  Ink flush consumes a great amount of ink.

  Frequent ink flush can rapidly consume ink, so perform it only when necessary.

  Important

  - If ink flush is performed when the remaining ink level is insufficient, it may cause a failure.

    Be sure to check the remaining ink level before performing ink flush.

    How to Do Ink Flush

Note

- If ink is not coming out when you perform printing for the first time, it is possible that ink is not flowing into the printer properly. Make sure each ink tank is filled with ink to its upper limit and perform ink flush.

How to Do Ink Flush

If the problem is not resolved yet, the print head may be damaged. Contact your nearest Canon service center to request a repair.

Important

- Do not tilt the printer when moving it since the ink may leak out.
- When transporting the printer for repairing it, see Repairing Your Printer.

Ink Runs Out Fast

After you refill the ink tanks, the printer takes in ink from the ink tanks and ink flows into the printer.

Ink may seem to run out fast due to this procedure.

Q

Paper Does Not Feed Properly/"No Paper" Error

A

Check1 Make sure paper is loaded.

- Loading Paper

Check2 When loading paper, consider the following.

- When loading two or more sheets of paper, flip through the paper before loading it.

- When loading two or more sheets of paper, align the edges of the sheets before loading the paper.
- When loading two or more sheets of paper, make sure the paper stack does not exceed the paper load limit.

  However, paper may not feed correctly at the maximum capacity, depending on the type of paper or environmental conditions (very high or low temperature and humidity). In such cases, reduce the amount of paper you load at a time to less than half of the paper load limit.
- Always load the paper in portrait orientation, regardless of the printing orientation.
- When you load the paper, place the print side facing UP and align the right and left paper guides with the paper stack.

  - Loading Paper

Check3 Is paper too thick or curled?

- Unsupported Media Types

Check4 When loading envelopes, consider the following.

When printing on envelopes, see Loading Envelopes, and prepare the envelopes before printing.

Once you have prepared the envelopes, load them in portrait orientation. If the envelopes are placed in landscape orientation, they will not feed properly.

Check5 Make sure media type and paper size settings match with loaded paper.

Check6 Make sure that there are not any foreign objects in the rear tray.

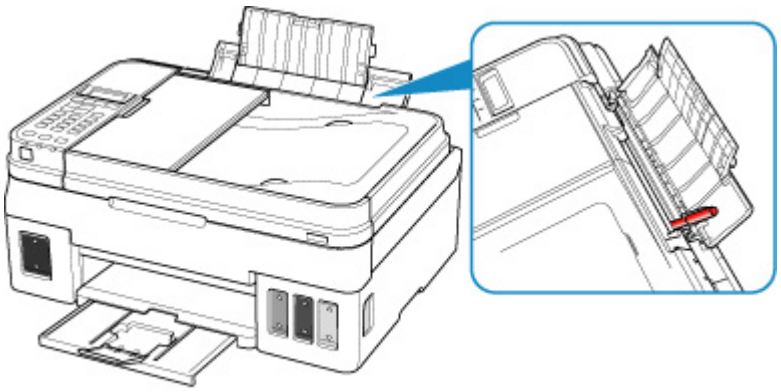

If the paper tears in the rear tray, see List of Support Code for Error (Paper Jams) to remove it.

If there are any foreign objects in the rear tray, be sure to turn off the printer, unplug it from the power supply, then remove the foreign object.

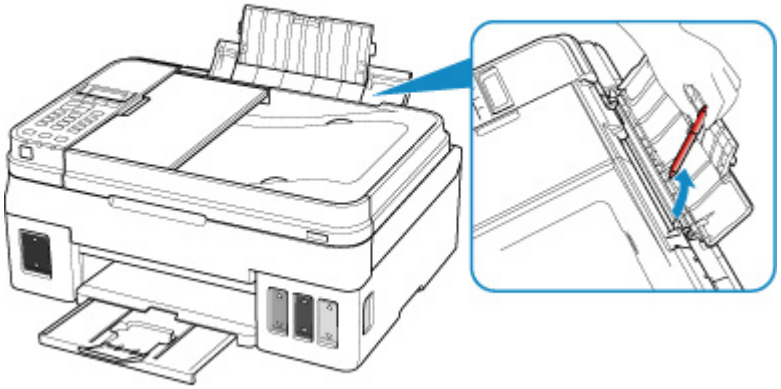

Important

- Do not tilt the printer or do not it upside down. Doing so may cause the ink to leak.

Check7 Clean paper feed roller.

Cleaning Paper Feed Rollers

If the measures above do not solve the problem, contact your nearest Canon service center to request a repair.

Important

- Do not tilt the printer when moving it since the ink may leak out.
- When transporting the printer for repairing it, see Repairing Your Printer.

Print Results Are Unsatisfactory

If the print results are unsatisfactory due to white streaks, misaligned lines, or uneven colors, check the paper and print quality settings first.

Check1 Do page size and media type settings match size and type of loaded paper?

If these settings do not match, it is not possible to obtain the proper result.

If you are printing a photograph or an illustration, an incorrect paper type setting may reduce the quality of the printout color.

Also, if you print with an incorrect paper type setting, the printed surface may be scratched.

In borderless printing, uneven coloring may occur depending on the combination of the paper type setting and the loaded paper.

The method for checking the paper and print quality settings differs depending on what you are using your printer for.

Copying	Check the settings using the operation panel. ■ Setting Items for Copying
Printing from your computer (Windows)	Check the settings using the printer driver. ■ Basic Printing Setup

Check2 Make sure appropriate print quality is selected (see table above).

Select a print quality suited to the paper and to what you are printing. If you notice blurs or uneven colors, increase the print quality setting and retry the printing.

Check3 If problem is not resolved, check other causes.

See also the sections below:

- Paper Is Blank/Printing Is Blurry/Colors Are Wrong/White Streaks Appear
- Colors Are Unclear
- Lines Are Misaligned
- Paper Is Smudged / Printed Surface Is Scratched
- Vertical Line Next to Image
- Cannot Complete Printing
- Lines Incomplete or Missing (Windows)
- Images Incomplete or Missing (Windows)
- Ink Blots / Paper Curl
- Back of Paper Is Smudged
- Uneven or Streaked Colors

Q

Paper Is Blank/Printing Is Blurry/Colors Are Wrong/White Streaks Appear

Printing Is Blurry

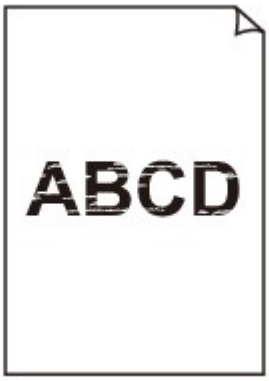

Colors Are Wrong

White Streaks Appear

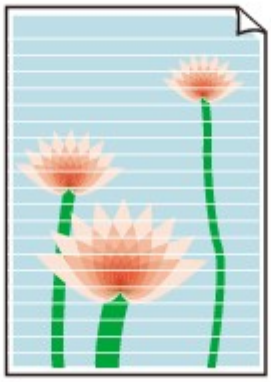

A

Check1 Check paper and print quality settings.

- Print Results Are Unsatisfactory

Check2 Check the remaining ink level.

When an ink tank runs out of ink, refill the ink tank.

If the remaining ink level is below the lower limit line (A), refill the ink tank with the corresponding color of ink.

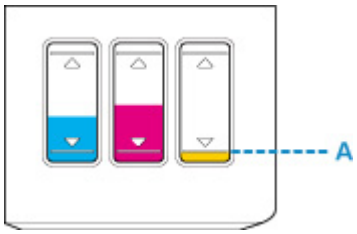

Check3 Are the print head nozzles clogged?

Print the nozzle check pattern to determine whether the ink ejects properly from the print head nozzles.

For details on printing the nozzle check pattern, print head cleaning, and print head deep cleaning, see If Printing Is Faint or Uneven.

- If nozzle check pattern is not printed correctly:

  After performing the print head cleaning, print the nozzle check pattern and examine the pattern.

  - Cleaning

- If problem is not resolved after performing print head cleaning twice:

  Perform print head deep cleaning.

  - Deep Cleaning

- If problem is not resolved after performing print head deep cleaning:

  Perform ink flush.

  Ink flush consumes a great amount of ink.

  Frequent ink flush can rapidly consume ink, so perform it only when necessary.

Important

- If ink flush is performed when the remaining ink level is insufficient, it may cause a failure.

  Be sure to check the remaining ink level before performing ink flush.

  How to Do Ink Flush

Check4 When using paper with one printable surface, make sure paper is loaded with printable side facing up.

Printing on the wrong side of such paper may cause unclear prints or prints with reduced quality.

Load paper with the printable side facing up.

Refer to the instruction manual supplied with the paper for detailed information on the printable side.

- **When copying, see also the sections below:**

Check5 Is platen glass or glass of ADF dirty?

Clean the platen glass or the glass of ADF.

Cleaning the Platen Glass and Document Cover

Cleaning the ADF (Auto Document Feeder)

Note

- If the glass of ADF is dirty, black streaks appear on the paper as shown below.

Check6 Make sure original is loaded correctly on platen glass or in ADF.

Loading Originals

Check7 Is original document is loaded with proper side facing up/down?

When loading the original on the platen glass, the side to be copied should be face down. When loading the original in the ADF, the side to be copied should be face up.

Check8 Did you copy a printout done by this printer?

If you use a printout done by this printer as the original, print quality may be reduced depending on the condition of the original.

Reprint from the computer if you can reprint from it.

Q

Colors Are Unclear

A

Check1 Check the remaining ink level.

When an ink tank runs out of ink, refill the ink tank.

If the remaining ink level is below the lower limit line (A), refill the ink tank with the corresponding color of ink.

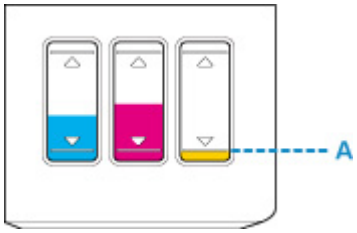

Note

- Printed colors may not match screen colors due to basic differences in the methods used to produce colors. Color control settings and environmental differences can also affect how colors appear on the screen. Therefore, colors of printing results may be different from those on the screen.

Check2 Are the print head nozzles clogged?

Print the nozzle check pattern to determine whether the ink ejects properly from the print head nozzles.

For details on printing the nozzle check pattern, print head cleaning, and print head deep cleaning, see If Printing Is Faint or Uneven.

- If nozzle check pattern is not printed correctly:

  After performing the print head cleaning, print the nozzle check pattern and examine the pattern.

  ■ Cleaning

- If problem is not resolved after performing print head cleaning twice:

  Perform print head deep cleaning.

  ■ Deep Cleaning

- If problem is not resolved after performing print head deep cleaning:

  Perform ink flush.

  Ink flush consumes a great amount of ink.

  Frequent ink flush can rapidly consume ink, so perform it only when necessary.

  Important

  - If ink flush is performed when the remaining ink level is insufficient, it may cause a failure.

    Be sure to check the remaining ink level before performing ink flush.

■ How to Do Ink Flush

If the problem is not resolved yet, the print head may be damaged. Contact your nearest Canon service center to request a repair.

Important

- Do not tilt the printer when moving it since the ink may leak out.
- When transporting the printer for repairing it, see Repairing Your Printer.

Q

Lines Are Misaligned

A

Check1 Check paper and print quality settings.

- Print Results Are Unsatisfactory

Check2 Perform print head alignment.

If printed lines are misaligned or print results are otherwise unsatisfactory, adjust the print head position.

- Aligning the Print Head

Note

- If the problem is not resolved after performing the print head alignment, perform print head alignment manually from your computer.
  - For Windows:
    - Adjusting Print Head Position
  - For macOS:
    - Adjusting Print Head Position

Check3 Increase print quality and try printing again.

Increasing the print quality may improve the print result.

Q

Paper Is Smudged / Printed Surface Is Scratched

Paper Is Smudged

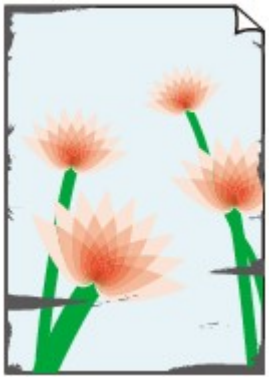

Smudged Edges

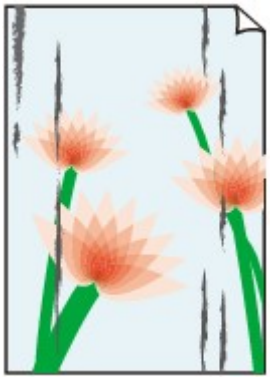

Smudged Surface

Printed Surface Is Scratched

A

Check1 Check paper and print quality settings.

- Print Results Are Unsatisfactory

Check2 Check paper type.

Make sure you are using the right paper for what you are printing.

- Supported Media Types

Check3 Correct curl before loading paper.

We recommend putting unused paper back into the package and storing it flat.

- **Plain Paper**

  Turn the paper over and reload it to print on the other side.

  Leaving the paper loaded on the rear tray for a long time may cause the paper to curl. In this case, load the paper with the other side facing up. It may resolve the problem.

- **Other Paper such as envelope**

  If the paper corners curl more than 0.1 inch / 3 mm (A) in height, the paper may smudge or may not feed properly. Follow the instructions below to correct the paper curl.

1. Roll up paper in opposite direction to paper curl as shown below.

2. Check that paper is now flat.

   We recommend printing curl-corrected paper one sheet at a time.

Note

- Depending on paper type, the paper may smudge or may not feed properly even if it is not curled inward. Follow the instructions below to curl the paper outward up to 0.1 inch / 3 mm (B) in height before printing. This may improve the print result.

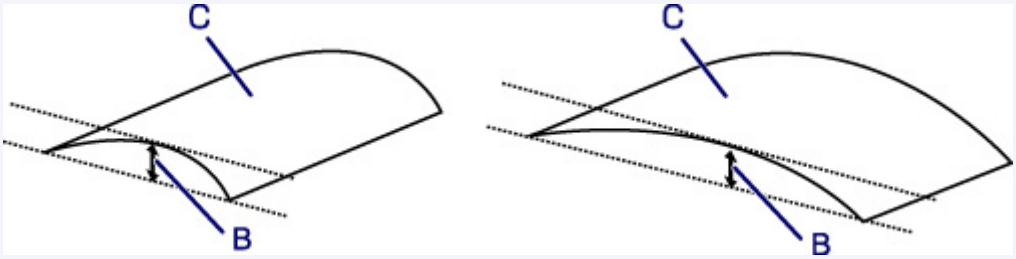

(C) Print side

We recommend feeding paper that has been curled outward one sheet at a time.

Check4 Set printer to prevent paper abrasion.

Adjusting the setting to prevent paper abrasion will widen the clearance between the print head and the paper. If you notice abrasion even with the media type set correctly to match the paper, set the printer to prevent paper abrasion using the operation panel or the computer.

This may reduce the print speed.

* Once you have finished printing, undo this setting. Otherwise, it will apply to subsequent print jobs.

- From operation panel

  Press the **Setup** button and select **Device settings** > **Print settings** in this order, and then set **Prevent abrasion** to **ON**.

  Changing Settings from Operation Panel

- From computer (Windows)

  Open the printer driver setup window, select **Custom Settings** in **Maintenance** sheet, select **Prevent paper abrasion** check box, and then click **OK**.

  To open the printer driver setup window, see Opening Printer Driver's Setup Screen.

Check5 If intensity is set high, reduce intensity setting and try printing again.

If you are printing with a high intensity setting on plain paper, the paper may absorb too much ink and become wavy, causing paper abrasion.

- Printing from your computer (Windows)

  Check the intensity setting in the printer driver.

  - Adjusting Intensity

- Copying

  - Setting Items for Copying

Check6 Do not print outside recommended printing area.

If you print outside the recommended printing area of your paper, ink may stain the lower edge of the paper.

Resize the document using application software.

- Print Area

Check7 Is platen glass or glass of ADF dirty?

Clean the platen glass or the glass of ADF.

- Cleaning the Platen Glass and Document Cover
- Cleaning the ADF (Auto Document Feeder)

Note

- If the glass of ADF is dirty, black streaks appear on the paper as shown below.

Check8 Is paper feed roller dirty?

Clean paper feed roller.

- Cleaning Paper Feed Rollers

Check9 Is inside of printer dirty?

During duplex printing, ink may stain the inside of the printer, smudging the printout.

Perform bottom plate cleaning to clean inside of printer.

- Cleaning Inside the Printer (Bottom Plate Cleaning)

Note

- To prevent staining inside the printer, be sure to set the correct paper size.

Check10 Set longer ink drying time.

This allows the printed surface to dry, preventing smudges and scratches.

- For Windows:
  1. Make sure printer is turned on.
  2. Open printer driver setup window.

     Opening Printer Driver's Setup Screen
  3. Click **Maintenance** tab and **Custom Settings**.
  4. Drag **Ink Drying Wait Time** slide bar to set the wait time and click **OK**.
  5. Check message and click **OK**.
- For macOS:

  Set the waiting time using Remote UI.

  Changing the Printer Operation Mode

Q

Vertical Line Next to Image

A

Check Is loaded paper size correct?

If the loaded paper is larger than the size you specified, a vertical line may appear in the margin.

Set the paper size to match the loaded paper.

Print Results Are Unsatisfactory

Note

- The direction of the vertical line pattern may vary depending on the image data or the print setting.
- This printer performs automatic cleaning when necessary to keep printouts clean. A small amount of ink is ejected for cleaning.

  Although the ink is normally ejected onto the ink absorber at the outer edge of the paper, it may get onto the paper if the loaded paper is larger than the set size.

Scanning Problems (Windows)

➤ Scanning Problems

Scanning Problems

- Scanner Does Not Work
- ScanGear (Scanner Driver) Does Not Start

Scanner Does Not Work

Check 1 Make sure that your scanner or printer is turned on.

Check 2 Connect the USB cable to a different USB port on the computer.

Check 3 If the USB cable is connected to a USB hub, remove it from the USB hub and connect it to a USB port on the computer.

Check 4 With network connection, check the connection status and reconnect as needed.

Check 5 Restart the computer.

Check 6 If one or more ink cartridges/tanks is low on ink or empty, the device's functions could be suspended. If this occurs, follow the instructions for resolving the 1640 support code.

ScanGear (Scanner Driver) Does Not Start

Check 1 Make sure MP Drivers is installed.

If not installed, install MP Drivers from the Setup CD-ROM or our website.

Check 2 Select your scanner or printer on the application's menu.

Important

- If your scanner or printer name is displayed multiple times, select the one that does not include WIA.

Note

- The operation may differ depending on the application.
- Use the WIA driver when scanning from a WIA-compliant application.

  Scanning with WIA Driver

Check 3 Make sure that the application supports TWAIN.

You cannot start ScanGear (scanner driver) from applications not supporting TWAIN.

Check 4 Scan and save images with IJ Scan Utility and open the files in your application.

Faxing Problems

- Problems Sending Faxes
- Problems Receiving Faxes
- Telephone Problems

Problems Sending Faxes

- Cannot Send a Fax
- Errors Often Occur When You Send a Fax

Cannot Send a Fax

Check1 Is power turned on?

- You cannot send faxes if the power is turned off. Press the **ON** button to turn the power on.
- If you unplugged the power cord without turning off the power (the **ON** lamp is lit), reconnecting it turns on the power automatically.
- If you unplugged the power cord after pressing the **ON** button to turn off the power (the **ON** lamp is off), reconnect it, and then press the **ON** button to turn on the power.
- If the power was turned off due to power failure, etc., the power is automatically turned on when the power failure is resolved.

Important

- Confirm that the **ON** lamp is off before unplugging the power cord, and then unplug the power cord.

  If a power failure occurs or you unplug the power cord, all faxes stored in the printer's memory are deleted.

  For details on how to unplug the power cord, see Unplugging the Printer.

Note

- If the faxes stored in the printer's memory are deleted by a power failure or unplugging the power cord, the list of the faxes deleted from the printer's memory (MEMORY CLEAR REPORT) will be printed after turning the printer on.

  Summary of Reports and Lists

Check2 Is document being sent from memory or the fax being received into memory?

When the message for the transmission/reception is displayed on the Fax standby screen, a fax is being sent from/received into printer's memory. Wait until the transmission/reception is complete.

Check3 Is telephone line type set correctly?

Check the telephone line type setting and change it as necessary.

Setting Telephone Line Type

Check4 Is **Hook setting** set to **Disable**?

When you send a fax manually, dial the number with **Enable** selected for **Hook setting** in **Security control** under **Fax settings**, or dial the number using the telephone connected to the printer.

Fax settings

Check5 Is **Dial tone detect** set to **ON**?

Resend the fax after a while.

If you still cannot send the fax, select **OFF** for **Dial tone detect** in **Adv. FAX settings** under **Fax settings**.

- Fax settings

Check6 Is fax number registered correctly in printer's directory?

Check the recipient's fax/telephone number, correct the fax/telephone number registered in the printer's directory, and then send the document again.

- Changing Registered Information

Note

- You can check the registered information in the printer's directory by printing RECIPIENT TELEPHONE NUMBER LIST.
  - Summary of Reports and Lists

Check7 Does an error occur during transmission?

- Ensure that a message is displayed on the Fax standby screen. When a message is displayed on the Fax standby screen, check the cause.
  - A Message for Faxing Is Displayed on Fax Standby Screen
- Print ACTIVITY REPORT and check for an error.
  - Summary of Reports and Lists

- Errors Often Occur When You Send a Fax

Check8 Is document loaded properly?

Remove the document, and then reload it on the platen glass or in the ADF.

- Loading Originals

Check9 Does a printer error occur?

Ensure that an error message is displayed on the LCD. When an error message is displayed on the LCD, check the cause.

When the error message and support code are displayed, refer to List of Support Code for Error.

When only the error message is displayed, refer to Message (Support Code) Appears.

If you are in a hurry, press the **Stop** button to close the message, and then send the fax.

Check10 Is telephone line connected correctly?

Reconnect the telephone line cable to the telephone line jack.

- Connecting Telephone Line

If the telephone line is connected correctly, there is a problem with your telephone line. Contact your telephone company and the manufacturer of your terminal adapter or telephone adapter.

Errors Often Occur When You Send a Fax

Check Check telephone line condition or connection.

If errors occur frequently when using an Internet telephone, it is possible that they can be reduced by selecting **Reduce** for **Err reduction (VoIP)** on **Adv. FAX settings** under **FAX settings**.

For details, see **Err reduction (VoIP)**.

FAX settings

Note

- If selecting **Reduce** does not reduce errors, select **Do not reduce**.

In addition, when using an Internet telephone, it is possible that errors occur more often if **4800 bps** or **9600 bps** is selected for **TX start speed**. Select **14400 bps** or **33600 bps**.

If the telephone line or connection is poor when using a general telephone, reducing the transmission start speed may correct the error.

Reduce the transmission start speed on **TX start speed** in **Adv. communication** in **Adv. FAX settings** under **FAX settings**.

FAX settings

Problems Receiving Faxes

- Cannot Receive a Fax, Cannot Print a Fax
- Quality of Received Fax is Poor

Cannot Receive a Fax, Cannot Print a Fax

Check1 Is power turned on?

- You cannot receive faxes if the power is turned off. Press the **ON** button to turn the power on.
- If you unplugged the power cord without turning off the power (the **ON** lamp is lit), reconnecting it turns on the power automatically.
- If you unplugged the power cord after pressing the **ON** button to turn off the power (the **ON** lamp is off), reconnect it, and then press the **ON** button to turn on the power.
- If the power was turned off due to power failure, etc., the power is automatically turned on when the power failure is resolved.

Important

- Confirm that the **ON** lamp is off before unplugging the power cord, and then unplug the power cord.

  If a power failure occurs or you unplug the power cord, all faxes stored in the printer's memory are deleted.

  For details on how to unplug the power cord, see Unplugging the Printer.

Note

- If the faxes stored in the printer's memory are deleted by a power failure or unplugging the power cord, the list of the faxes deleted from the printer's memory (MEMORY CLEAR REPORT) will be printed after turning the printer on.

  Summary of Reports and Lists

Check2 Does an error occur during reception?

- Ensure that a message is displayed on the Fax standby screen. When a message is displayed on the Fax standby screen, check the cause.

  A Message for Faxing Is Displayed on Fax Standby Screen

- Print ACTIVITY REPORT and check for an error.

  Summary of Reports and Lists

Errors Often Occur When You Receive a Fax

Check3 Is telephone line cable connected to external device jack?

Reconnect it to the telephone line jack.

Connecting Telephone Line

Check4 Is a different size of paper from that specified by **Page size** in **FAX paper settings** loaded?

If a different size of paper from that specified by **Page size** is loaded for printing faxes, the received faxes will not be printed and will be stored in the printer's memory (Memory Reception). Load the same size of paper as that specified by **Page size**, then press the **OK** button on the printer.

Check5 Is paper loaded?

If paper is not loaded, received faxes will be stored in the printer's memory without being printed (Memory Reception). Load paper, and then press the **OK** button.

Check6 Is printer set to appropriate receive mode?

Check the receive mode setting and change it to a mode suited to your connection if necessary.

- Setting Receive Mode

Check7 Is **FAX RX reject** set to **ON**?

Select **OFF** for **FAX RX reject** in **Security control** under **Fax settings**.

For details, refer to Rejecting Fax Reception.

Check8 Are there setting items set **Reject** in **Caller rejection**?

If you select **Reject** for any setting items in **Caller rejection** in **Security control** under **Fax settings**, the printer rejects calls for setting item selected **Reject**.

For details, refer to Using Caller ID Service to Reject Calls.

Check9 Is the printer's memory full?

If unprinted received faxes stored in the printer's memory, print them and then delete from the printer's memory.

Then contact the sender and have the sender resend the faxes.

- Document Stored in Printer's Memory

Quality of Received Fax is Poor

Check1 Check scan settings of sender's fax device.

Ask the sender to adjust the scan settings of the fax device.

Check2 Is **ECM RX** set to **OFF**?

Select **ON** for **ECM RX** in **Adv. communication** in **Adv. FAX settings** under **Fax settings**.

If **ECM RX** is enabled, the sender's fax device resends the fax after correcting errors automatically.

Fax settings

Check3 Is sender's original document or scanning area of sender's fax device dirty?

The image quality of the fax is mainly determined by the sender's fax device. Contact the sender and ask the sender to check whether the scanning area of the fax device is dirty.

Check4 Is ECM transmission/reception enabled although the line/connection is poor, or is the sender's fax device compatible with ECM?

- Select **ON** for **ECM RX** in **Adv. communication** in **Adv. FAX settings** under **Fax settings**.

  Fax settings

- Contact the sender and ask the sender to check whether the fax device is set to enable ECM transmission.

  If the sender's or recipient's fax device is not compatible with ECM, the fax will be sent/received without automatic error correction.

- Reduce the reception start speed on **RX start speed** in **Adv. communication** in **Adv. FAX settings** under **Fax settings**.

  Fax settings

Check5 Did you confirm paper and print quality settings?

Print Results Are Unsatisfactory

Telephone Problems

- Cannot Dial
- Telephone Disconnects During a Call

Cannot Dial

Check1 Is telephone line cable connected correctly?

Check that the telephone line cable is connected correctly.

- Connecting Telephone Line

Check2 Is telephone line type of printer or external device set correctly?

Check the telephone line type setting and change it as necessary.

- Setting Telephone Line Type

Telephone Disconnects During a Call

Check Is telephone line cable or telephone (or a peripheral device such as an external telephone, an answering machine, or a computer modem) connected correctly?

Check that the telephone line cable and the telephone (or a peripheral device such as an external telephone, an answering machine, or a computer modem) are connected correctly.

- Connecting Telephone Line

Mechanical Problems

- Printer Does Not Turn On
- Power Shuts Off By Itself
- USB Connection Problems
- Cannot Communicate with Printer via USB

Q

Printer Does Not Turn On

A

Check1 Press **ON** button.

Check2 Make sure power plug is securely connected to printer, and then turn it back on.

Check3 Unplug printer, leave it for at least 2 minutes, and then plug it back in and turn it on again.

If this does not solve the problem, contact your nearest Canon service center to request a repair.

Important

- Do not tilt the printer when moving it since the ink may leak out.
- When transporting the printer for repairing it, see Repairing Your Printer.

Power Shuts Off By Itself

Check If printer is set to turn off automatically after a certain time, disable this setting.

If you have set the printer to turn off automatically after a specified time, the power will shut off by itself once that time has elapsed.

- To disable the setting from the operation panel:
  1. Make sure printer is turned on.
  2. Press the **Setup** button, use the ◄ ► button to select **ECO (power on/off)**, and press the **OK** button.

     LCD and Operation Panel
  3. Use the ◄ ► button to select **Auto power off** and then press the **OK** button.
  4. Use the ◄ ► button to select **OFF** and then press the **OK** button.

     The setting to shut off the power automatically is disabled.
- To disable the setting from the computer:

  For Windows, use Canon IJ Printer Assistant Tool or ScanGear (scanner driver) to disable the setting.

  Follow the procedure below to disable the setting using Canon IJ Printer Assistant Tool.
  1. Open Canon IJ Printer Assistant Tool.

     Maintenance tab Description
  2. Select printer you are using from pulldown menu and select **OK**.

     The menu screen appears.
  3. Select **Auto Power**.
  4. Select **Disable** for **Auto Power Off**.

     The setting to shut off the power automatically is disabled.

Note

- Refer to below to disable the setting from ScanGear (scanner driver).

  Scanner Tab

USB Connection Problems

Q Printing or Scanning Is Slow/Hi-Speed USB Connection Does Not Work/"This device can perform faster" Message Appears (Windows)

A

If your system environment does not support Hi-Speed USB, the printer operates at the slower speed of USB 1.1. In this case, the printer works properly but printing or scanning speed may slow down due to the communication speed.

Check Check following to make sure your system environment supports Hi-Speed USB connection.

- Does the USB port on your computer support Hi-Speed USB connection?
- Does the USB cable or the USB hub support Hi-Speed USB connection?

  Be sure to use a certified Hi-Speed USB cable. We recommend that the USB cable be no longer than 10 feet / 3 meters or so.
- Is the Hi-Speed USB driver working properly on your computer?

  Make sure the latest Hi-Speed USB driver is working properly and obtain and install the latest version of the Hi-Speed USB driver for your computer, if necessary.

Important

- For more information, contact the manufacturer of your computer, USB cable, or USB hub.

Q

Cannot Communicate with Printer via USB

A

Check1 Make sure printer is turned on.

Check2 Connect USB cable properly.

As the illustration below, the USB port is at the back of the printer.

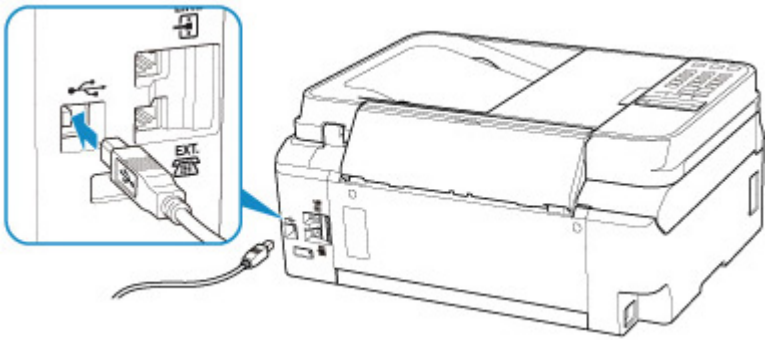

Important

- Connect the "Type-B" terminal to the printer with the notched side facing LEFT. For details, refer to the instruction manual supplied with the USB cable.

Check3 Make sure **Enable bidirectional support** is selected in the **Ports** sheet of the properties dialog box of the printer driver. (Windows)

If not, select it to enable bidirectional support.

Opening Printer Driver's Setup Screen

Installation and Download Problems

- Cannot Install MP Drivers (Windows)
- Updating MP Drivers in Network Environment (Windows)

Cannot Install MP Drivers (Windows)

- **If installation does not start when you insert Setup CD-ROM:**

  Follow the instructions below to start the installation.

  1. Make the following settings.
     - In Windows 10, click **Start** button > **File Explorer**, and then click **This PC** from list on left.
     - In Windows 8.1, select **Explorer** icon in **Taskbar** on **Desktop**, and then select **This PC** from list on left.
     - In Windows 7, click **Start**, and then click **Computer**.
  2. Double-click the CD-ROM icon in the window that appears.

     If the contents of the CD-ROM appear, double-click **MSETUP4.EXE**.

     If you cannot install the MP Drivers with the Setup CD-ROM, install them from the Canon website.

Note

- If the CD-ROM icon does not appear, try the following:
  - Remove the CD-ROM from your computer and reinsert it.
  - Restart your computer.

  If the icon still does not appear, try a different disc and see if it appears. If it does, there is a problem with the Setup CD-ROM. Contact your nearest Canon service center to request a repair.

- **If you cannot get past the Printer Connection screen:**

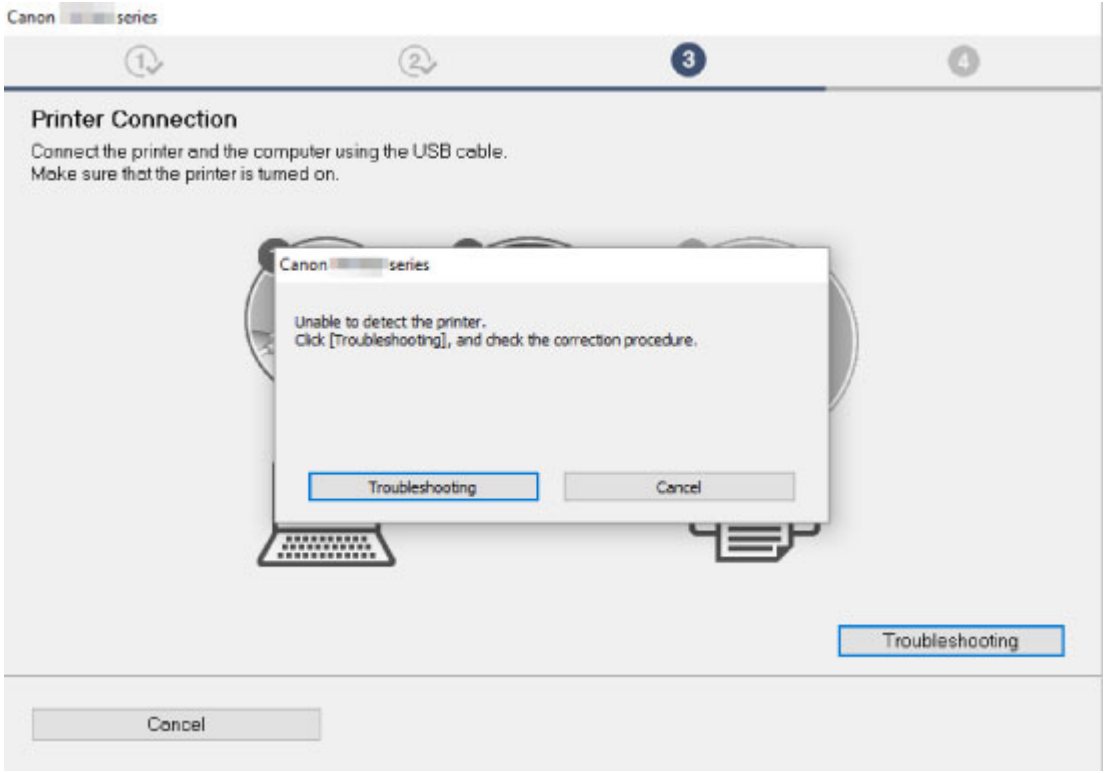

Cannot Proceed beyond Printer Connection Screen

- **Other cases:**

Reinstall the MP Drivers.

If the MP Drivers were not installed correctly, uninstall the MP Drivers, restart your computer, and then reinstall the MP Drivers.

Deleting the Unnecessary MP Drivers

Reinstall the MP Drivers with the Setup CD-ROM or install them from the Canon website.

Note

- If the installer was stopped due to a Windows error, Windows operation may be unstable, and you may not be able to install the drivers. Restart your computer and then reinstall the drivers.

Updating MP Drivers in Network Environment (Windows)

Download the latest MP Drivers.

Download the latest MP Drivers for your model on the download page of the Canon website.

Uninstall the existing MP Drivers and follow the installation instructions to install the latest MP Drivers that you downloaded. In the connection method selection screen, select **Use the printer with wireless LAN connection**. The printer is detected automatically in the network.

Make sure the printer was found, and install the MP Drivers following the on-screen instructions.

Note

- The network settings on the printer are not affected, so the printer can be used on the network without redoing settings.

Errors and Messages

- An Error Occurs
- Message (Support Code) Appears

An Error Occurs

If an error occurs in printing, for example if the paper runs out or jams, a troubleshooting message appears automatically. Take the appropriate action described in the message.

When an error occurs, a message is displayed on the computer screen or the LCD. Depending on the error, a Support Code (error number) is displayed on the computer screen or the LCD.

When a Support Code and a message are displayed on the computer screen (Windows):

When a Support Code and a message are displayed on the LCD:

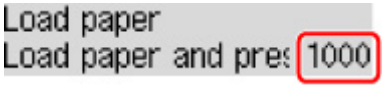

For details on how to resolve errors, see List of Support Code for Error.

Note

- For details on how to resolve errors without Support Codes, see Message (Support Code) Appears.

Message (Support Code) Appears

This section describes some of the errors and messages that may appear.

Note

- A support code (error number) is displayed on the computer for some errors. For details on errors that have support code, see List of Support Code for Error.

If a message appears on the LCD, see below.

- Message Appears on LCD

If a message appears on the computer, see below.

- Error Regarding Power Cord Being Unplugged Is Displayed (Windows)
- Writing Error/Output Error/Communication Error (Windows)
- Other Error Messages (Windows)
- Inkjet Printer/Scanner/Fax Extended Survey Program Screen Is Displayed (Windows)
- Inkjet Printer/Scanner/Fax Extended Survey Program Icon Appears (Mac OS)

Q Message Appears on LCD

A

Check the message and take an appropriate action.

- **Check page size Press [OK]**

  The size of the loaded paper is different from that specified in the paper size setting.

  Load the same size of paper as that specified in the paper size setting and press the **OK** button.

- **Data error Press [OK]**

  A power failure has occurred or the power cord has been unplugged when the faxes are stored in the printer's memory.

  Important

  - If a power failure occurs or you unplug the power cord, all faxes stored in the printer's memory are deleted.
  - For details on how to unplug the power cord, see Unplugging the Printer.

  Press the **OK** button.

  After pressing the **OK** button, the list of the faxes deleted from the printer's memory (MEMORY CLEAR REPORT) will be printed.

  For details, refer to Summary of Reports and Lists.

- **Cannot connect to the server; try again**

  You cannot connect to the server due to some communication error.

  Press the **OK** button to dismiss the error and try again after a while.

Q Error Regarding Power Cord Being Unplugged Is Displayed (Windows)

A

The printer may have been unplugged while it was on.

Check the error message that appears on the computer and click **OK**.

The printer starts printing.

See Unplugging the Printer for unplugging the power cord.

Important

- If you unplug the power cord, all the faxes stored in the printer's memory are deleted.

Q Writing Error/Output Error/Communication Error (Windows)

A

Check1 If the **ON** lamp is off, make sure printer is plugged in and turn it on.

The **ON** lamp flashes while the printer is initializing. Wait until the **ON** lamp stops flashing and remains lit.

Check2 Make sure printer is properly connected to computer.

If you are using a USB cable, make sure it is securely connected to both the printer and the computer. When the USB cable is securely plugged in, check the following:

- If you are using a relay device such as a USB hub, disconnect it, connect the printer directly to the computer, and retry the printing. If printing starts normally, there is a problem with the relay device. Contact the vendor of the relay device.
- There could also be a problem with the USB cable. Replace the USB cable and retry the printing.

If you use the printer over a LAN, make sure the printer is correctly set up for network use.

Check3 Make sure MP Drivers are installed correctly.

Uninstall the MP Drivers following the procedure described in Deleting the Unnecessary MP Drivers and reinstall them from the Setup CD-ROM or the Canon website.

Check4 When printer is connected to your computer with a USB cable, check device status from your computer.

Follow the procedure below to check the device status.

1. Open the Device Manager on your computer as shown below.

   If **User Account Control** screen is displayed, follow the on-screen instructions.

   - In Windows 10, right-click **Start** button and select **Device Manager**.

- In Windows 8.1, select **Control Panel** from **Settings** charm on **Desktop** > **Hardware and Sound** > **Device Manager**.
- In Windows 7, click **Control Panel**, **Hardware and Sound**, and **Device Manager**.

2. Double-click **Universal Serial Bus controllers** and **USB Printing Support**.

   If **USB Printing Support Properties** screen does not appear, make sure the printer is correctly connected to the computer.

   Check2 Make sure printer is properly connected to computer.

3. Click **General** tab and check for a device problem.

   If a device error is shown, see Windows Help to resolve it.

Q Other Error Messages (Windows)

A

Check If an error message appears outside printer status monitor, check the following:

- **"Could not spool successfully due to insufficient disk space"**

  Delete any unnecessary files to increase the amount of free space on the disk.

- **"Could not spool successfully due to insufficient memory"**

  Close other applications to increase the available memory.

  If you still cannot print, restart your computer and retry the printing.

- **"Printer driver could not be found"**

  Uninstall the MP Drivers following the procedure described in Deleting the Unnecessary MP Drivers and reinstall them from the Setup CD-ROM or the Canon website.

- **"Could not print Application name** - File name"

  Try printing again once the current job is complete.

Q Inkjet Printer/Scanner/Fax Extended Survey Program Screen Is Displayed (Windows)

A

If the Inkjet Printer/Scanner/Fax Extended Survey Program is installed, a screen appears asking for permission to send the printer and application usage information every month for about ten years.

Read the information on the screen and follow the instructions below.

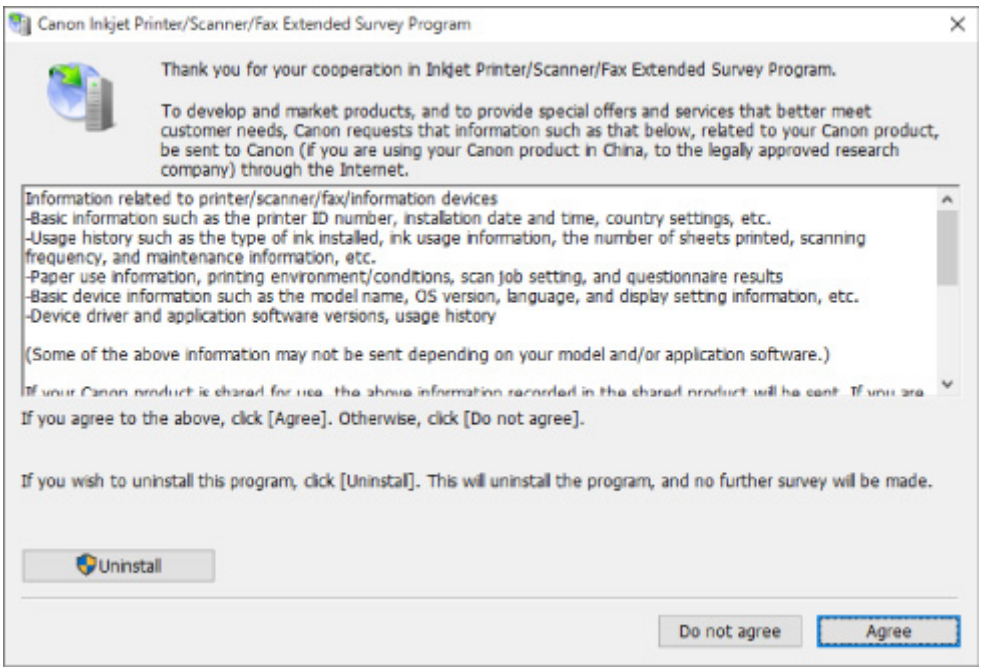

- **If you agree to participate in survey program:**

  Click **Agree** and follow the on-screen instructions. The printer usage information is sent via the Internet. Once you have completed the procedure, the information is subsequently sent automatically and the confirmation screen does not reappear.

  Note

  - When the information is being sent, a warning such as an Internet security message may appear. Make sure the program name is "IJPLMUI.exe" and allow it.
  - If you clear **Send automatically from the next time** check box, the information will not be sent automatically from next time and a confirmation screen will appear at the time of the next survey. To send the information automatically, see Changes confirmation screen setting:.

- **If you do not agree to participate in survey program:**

  Click **Do not agree**. The confirmation screen closes and the survey is skipped. The confirmation screen will reappear one month later.

- **To uninstall Inkjet Printer/Scanner/Fax Extended Survey Program:**

  To uninstall the Inkjet Printer/Scanner/Fax Extended Survey Program, click **Uninstall** and follow the on-screen instructions.

- **Changes confirmation screen setting:**

  1. Make the following settings.
     - In Windows 10, right-click **Start** button and select **Programs and Features**.
     - In Windows 8.1, select **Control Panel** from **Settings** charm on **Desktop** > **Programs** > **Programs and Features**.
     - In Windows 7, select **Start** menu > **Control Panel** > **Programs** > **Programs and Features**.

Note

- A confirmation/warning dialog box may appear when installing, uninstalling or starting up software.

  This dialog box appears when administrative rights are required to perform a task.

  If you are logged in on an account with administrator privileges, follow the on-screen instructions.

2. Select **Canon Inkjet Printer/Scanner/Fax Extended Survey Program**.
3. Select **Change**.

   If you select **Yes** after you have followed the on-screen instructions, the confirmation screen will appear at the time of the next survey.

   If you select **No**, the information will be sent automatically.

   Note

   - If you select **Uninstall**, the Inkjet Printer/Scanner/Fax Extended Survey Program is uninstalled. Follow the on-screen instructions.

Q Inkjet Printer/Scanner/Fax Extended Survey Program Icon Appears (macOS)

A

If the Inkjet Printer/Scanner/Fax Extended Survey Program is installed, the printer and application software usage information is sent every month for about ten years. The **Inkjet Printer/Scanner/Fax Extended Survey Program** icon appears in the Dock when it is time to send the printer usage information.

Click the icon, read the information that appears, and then follow the instructions below.

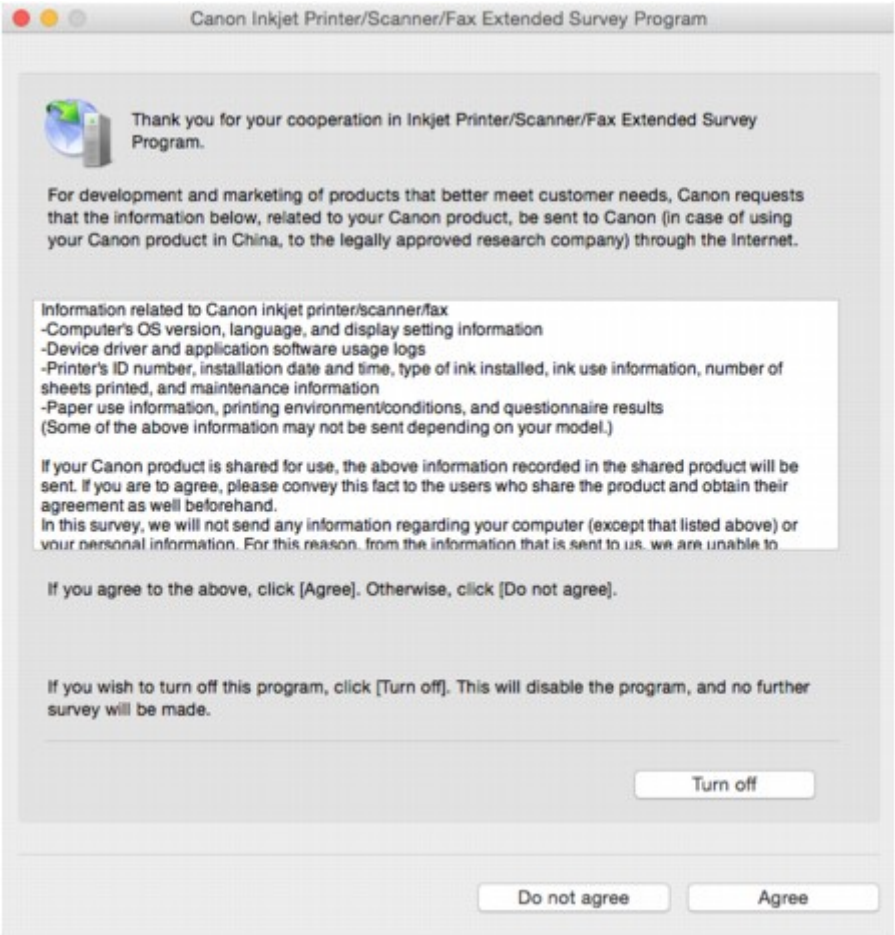

- **If you agree to participate in survey program:**

  Click **Agree** and follow the on-screen instructions. The printer usage information is sent via the Internet. Once you have completed the procedure, the information is subsequently sent automatically and the confirmation screen does not reappear.

  Note

  - If you clear **Send automatically from the next time** check box, the information will not be sent automatically the next time and the **Inkjet Printer/Scanner/Fax Extended Survey Program** icon will appear in the dock at the time of the next survey.

- **If you do not agree to participate in survey program:**

  Click **Do not agree**. The confirmation screen closes and the survey is skipped. The confirmation screen will reappear one month later.

- **To stop sending information:**

  Click **Turn off**. This stops the Inkjet Printer/Scanner/Fax Extended Survey Program, and information is not sent. To resume the survey, see Changing setting:.

- **To uninstall Inkjet Printer/Scanner/Fax Extended Survey Program:**

  1. Stop Inkjet Printer/Scanner/Fax Extended Survey Program.

     Changing setting:

2. Select **Applications** from **Go** menu of Finder, double-click **Canon Utilities** folder and **Inkjet Extended Survey Program** folder.
3. Move **Canon Inkjet Printer/Scanner/Fax Extended Survey Program.app** file to **Trash**.
4. Restart computer.

   Empty **Trash** and restart your computer.

- **Changing setting:**

  To display the confirmation screen every time the printer usage information is sent or to resume surveying, follow the procedure below.

  1. Select **Applications** from **Go** menu of Finder, double-click **Canon Utilities** folder and **Inkjet Extended Survey Program** folder.
  2. Double-click **Canon Inkjet Printer/Scanner/Fax Extended Survey Program** icon.

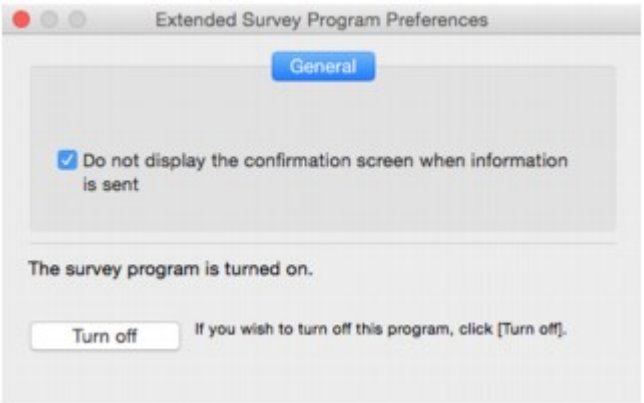

  - **Do not display the confirmation screen when information is sent**:

    If the check box is selected, the information will be sent automatically.

    If the check box is not selected, **Inkjet Printer/Scanner/Fax Extended Survey Program** icon will appear in the Dock at the time of the next survey. Click the icon and follow the on-screen instructions.

  - **Turn off**/**Turn on** button:

    Click the **Turn off** button to stop the Inkjet Printer/Scanner/Fax Extended Survey Program.

    Click the **Turn on** button to restart the Inkjet Printer/Scanner/Fax Extended Survey Program.

List of Support Code for Error

Support code appears on the LCD and on your computer screen when errors occur.

A "support code" is an error number, and appears along with an error message.

When an error occurs, check the support code displayed on the LCD and on the computer screen and take the appropriate action in response.

Support Code Appears on LCD and on Computer Screen

- **1000 to 1ZZZ**

  1000 1200 1300 1403 1430 1470

  1471 1472 1473 1474 1475 1476

  1640 1700 1701 1890

- **2000 to 2ZZZ**

  2114 2123 2700 2801 2802 2803

  2900 2901

- **3000 to 3ZZZ**

  3402 3403 3404 3405 3406 3407

  340D 340E 3410 3411 3412 3413

  3438 3439 3440 3441 3442 3443

  3444 3445 3446 3447 3449

- **4000 to 4ZZZ**

  4103 495A

- **5000 to 5ZZZ**

  5011 5012 5040 5050 5100 5200

  5205 5206 5400 5700 5B00 5B01

- **6000 to 6ZZZ**

  6000 6800 6801 6900 6901 6902

  6910 6911 6930 6931 6932 6933

  6936 6937 6938 6939 693A 6940

6941 6942 6943 6944 6945 6946

- **9000 to 9ZZZ**

  9500

- **A000 to ZZZZ**

  B202 B203 B204 B205

For paper jam support codes, see also List of Support Code for Error (Paper Jams).

List of Support Code for Error (Paper Jams)

If paper jams, remove it following the appropriate procedure as shown below.

- If you can see the jammed paper at the paper output slot or the rear tray:
  - 1300
- If you cannot see the jammed paper at the paper output slot or the rear tray:
  - Paper Is Jammed inside Printer
- If the document is jammed in the ADF (Auto Document Feeder):
  - 2801
- Cases other than above:
  - Other Cases

1300

Cause

Paper is jammed in paper output slot or in rear tray.

What to Do

If the paper is jammed in the paper output slot or in the rear tray, remove the jammed paper from the paper output slot or from the rear tray following the instructions below.

Important

- The printer cannot be turned off while it is sending or receiving a fax, or when the received fax or the unsent fax is stored in the printer's memory.

  Turn off the printer after making sure it has completed sending or receiving all the faxes. Do not unplug when turning off the printer.

  If you unplug the power cord, all the faxes stored in the printer's memory are deleted.

1. Slowly pull out paper, either from paper output slot or from rear tray, whichever is easier.

   Hold the paper with both hands, and pull it out slowly so as not to tear it.

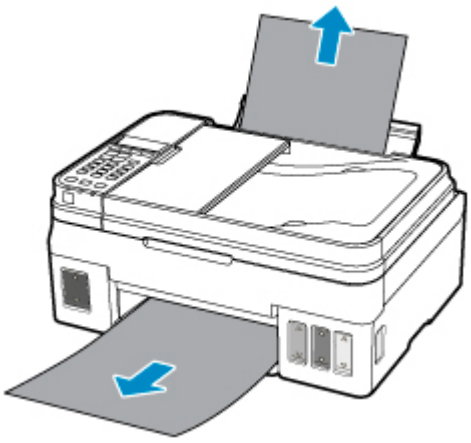

Note

- If you cannot pull out the paper, turn the printer back on without pulling forcibly. The paper may be ejected automatically.
- If paper becomes jammed during printing and you need to turn off the printer to remove it, press the **Stop** button to stop the printing before you turn off the printer.
- If the paper tears and you cannot remove the jammed paper from the paper output slot or the rear tray, remove the paper from inside the printer.

  Paper Is Jammed inside Printer

2. Reload paper and press printer's **OK** button.

   The printer resumes printing. Reprint the page you were printing if it was not printed properly due to the paper jam.

If you turned off the printer in step 1, the print data that was sent to the printer is erased. Redo the printing.

Note

- When reloading the paper, make sure you are using suitable paper and loading it correctly.
- We recommend using paper sizes other than A5 to print documents with photos or graphics. A5 paper may curl and jam as it leaves the printer.

If the measures above do not solve the problem, contact your nearest Canon service center to request a repair.

Important

- Do not tilt the printer when moving it since the ink may leak out.
- When transporting the printer for repairing it, see Repairing Your Printer.

Paper Is Jammed inside Printer

If the jammed paper tears and you cannot remove the paper either from the paper output slot or from the rear tray, or if the jammed paper remains inside the printer, remove the paper following the instructions below.

Important

- The printer cannot be turned off while it is sending or receiving a fax, or when the received fax or the unsent fax is stored in the printer's memory.

  Turn off the printer after making sure it has completed sending or receiving all the faxes. Do not unplug when turning off the printer.

  If you unplug the power cord, all the faxes stored in the printer's memory are deleted.

Note

- If paper becomes jammed during printing and you need to turn off the printer to remove it, press the **Stop** button to stop the printing before you turn off the printer.

1. Turn off printer and unplug it.

2. Open scanning unit / cover.

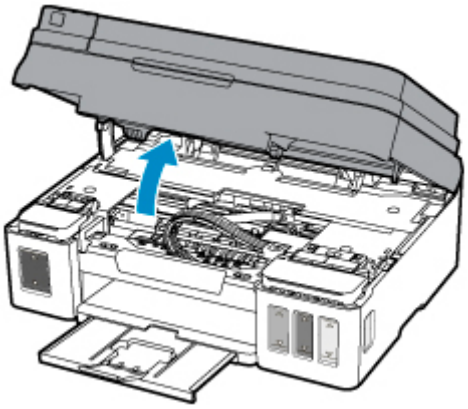

Important

- Do not touch clear film (A), white belt (B), or tubes (C).

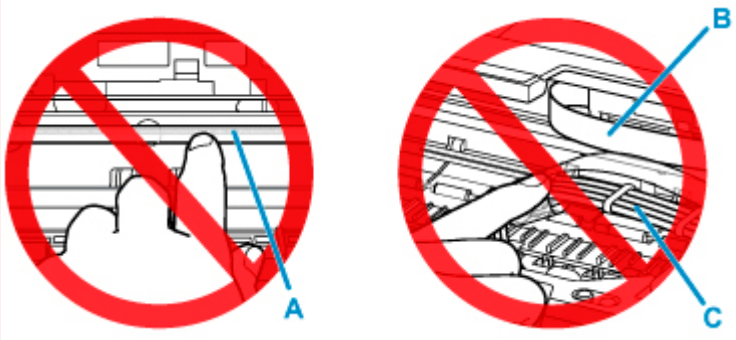

If you soil or scratch these parts by touching them with paper or your hand, it could damage the printer.

3. Check if jammed paper is under cartridge holder.

   If the jammed paper is under the cartridge holder, move the cartridge holder to the far right or left, whichever makes it easier to remove the paper.

   When moving the cartridge holder, hold the top of the cartridge holder and slide it slowly to the far right or left.

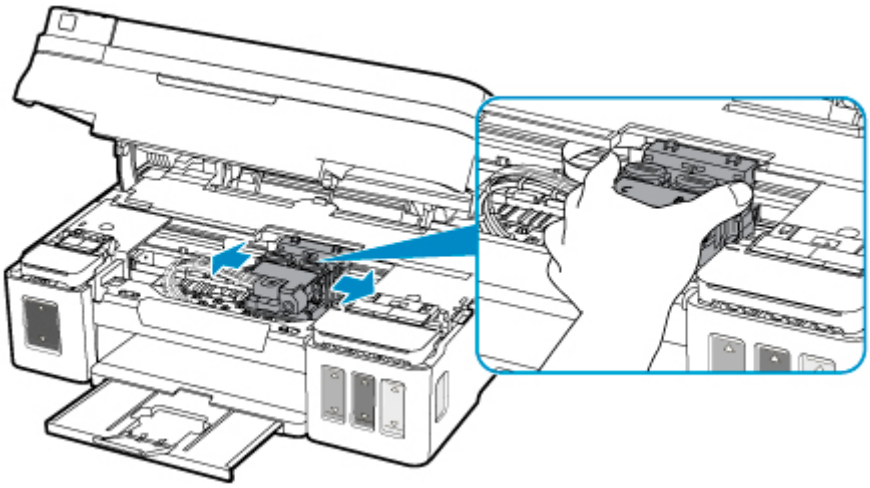

4. Hold jammed paper firmly in both hands.

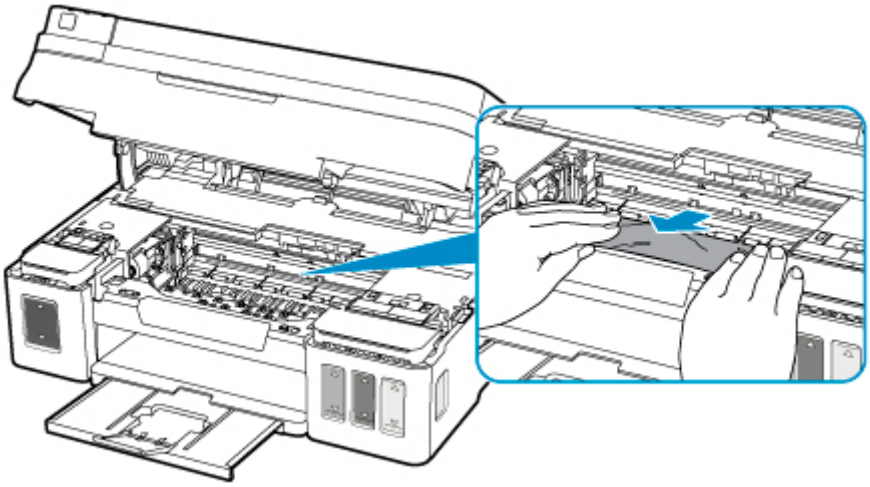

   If the paper is rolled up, pull out it.

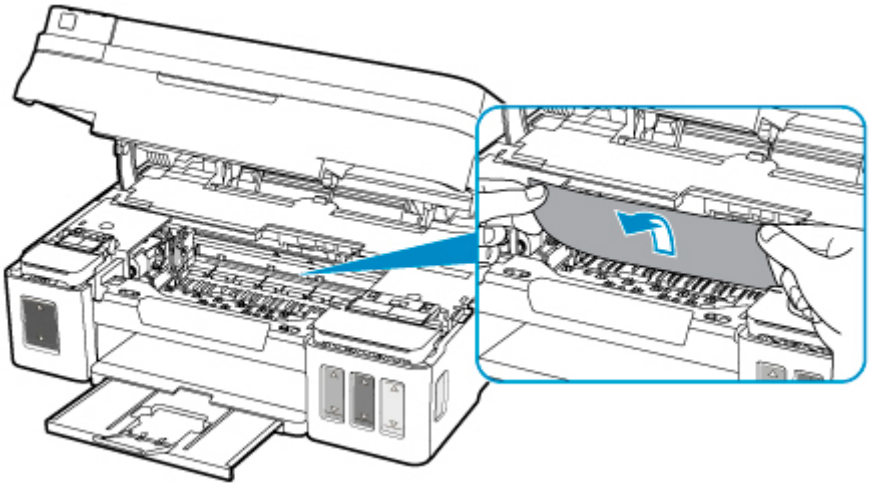

5. Slowly pull out paper, so as not to tear it.

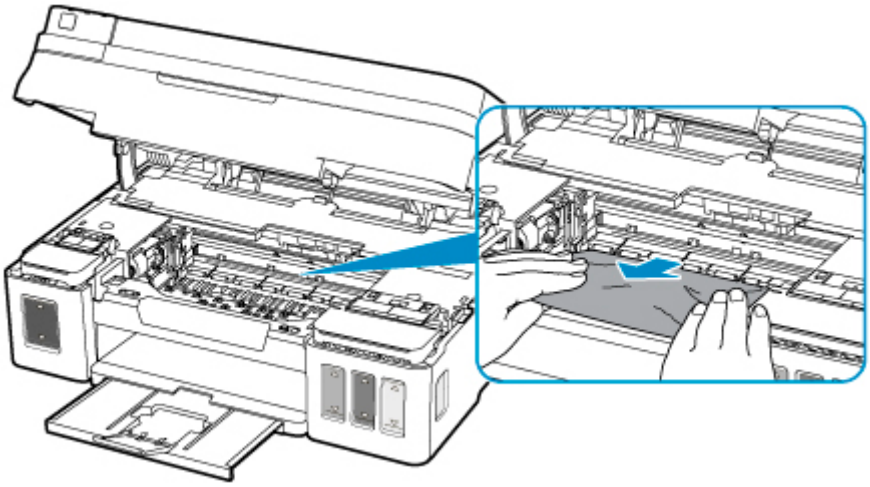

6. Make sure all jammed paper is removed.

   If the paper tears when you pull out it, a bit of paper may remain in the printer. Check the following and remove any remaining paper.

   - Any paper left under the cartridge holder?
   - Any small bits of paper left in the printer?
   - Any paper left in the left and right empty spaces (D) in the printer?

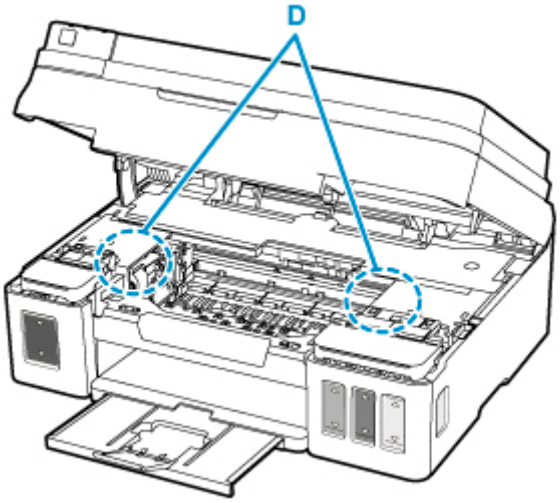

7. Close scanning unit / cover gently.

   All jobs in the print queue are canceled. Redo the printing.

   Note

   - When reloading the paper, make sure you are using suitable paper and loading it correctly. If a paper jam message appears on your computer screen when you resume printing after removing all the jammed paper, there may be some paper still inside the printer. Check the printer again for any remaining bits of paper.

If the measures above do not solve the problem, contact your nearest Canon service center to request a repair.

Important

- Do not tilt the printer when moving it since the ink may leak out.
- When transporting the printer for repairing it, see Repairing Your Printer.

1000

Cause

Possible causes include the following.

- There is no paper in the rear tray.
- Paper is not loaded in the rear tray properly.

What to Do

Take the corresponding actions below.

- Load paper in the rear tray.
- Align the paper guides with the both edges of the paper when you load paper in the rear tray.
- Set paper information for the paper in the rear tray.

After carrying out the above measures, press the printer's **OK** button.

Note

- After loading paper in the rear tray, the screen for setting rear tray paper information appears. Set paper information for the paper in the rear tray.
- To cancel printing, press the printer's **Stop** button.

1200

Cause

Scanning unit/cover is open.

What to Do

Close the scanning unit / cover and wait for a while.

Do not close it while you are refilling an ink tank.

1430

Cause

Cartridge cannot be recognized.

What to Do

A cartridge may not be installed properly or this printer does not support the cartridges.

If you are printing, press the printer's **Stop** button to cancel printing.

Remove the cartridges and reinstall them properly following the steps below. This may resolve the error.

1. Open the scanning unit / cover.

2. Open the right and left ink tank covers.

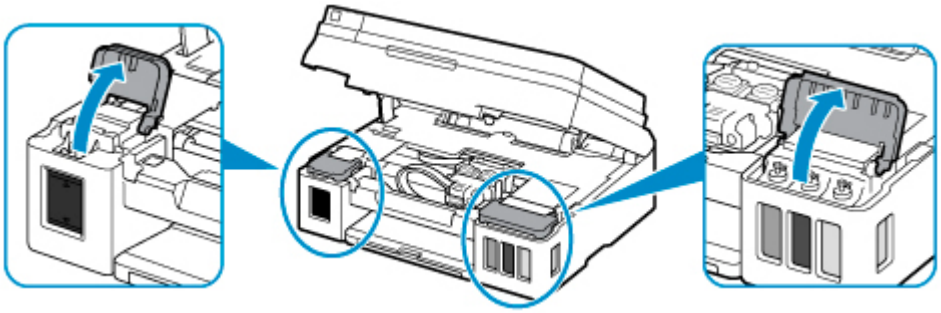

Important

- When removing cartridges, always open the ink tank covers. If the cartridges are removed without opening the ink tank covers, an Ink Flush will be required that will consume a large amount of ink.

3. Grab knob (A) on the cartridge locking cover to open it.

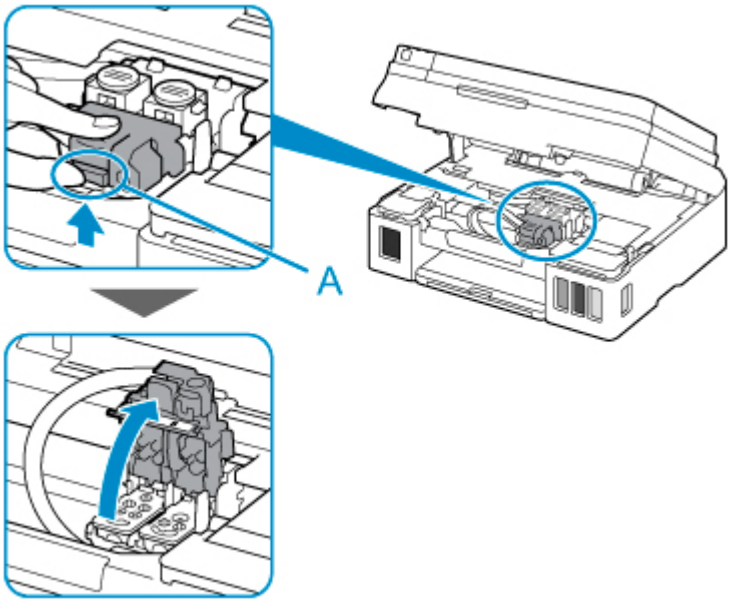

4. Remove the C (color) and B (black) cartridges.

Important

- When removing the cartridges, handle them carefully so that ink does not spatter.
- Do not touch the tube or other parts inside the printer. Touching these parts may cause the printer to malfunction.
- Do not touch the gold terminal or print head nozzles on a cartridge. The printer may not print properly if you touch them.

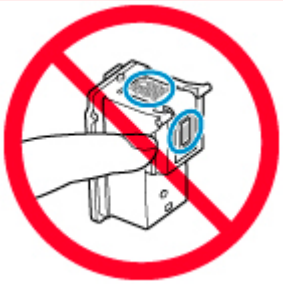

5. Reinstall the cartridges properly.

Install the C (color) cartridge in the left holder and the B (black) cartridge in the right holder.

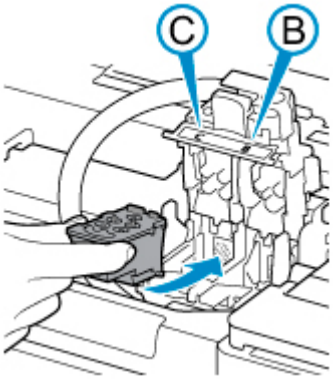

Important

- Insert the cartridge gently so that it does not hit the electrical contacts in the back of the cartridge holder.

6. Close the cartridge locking cover and push it down.

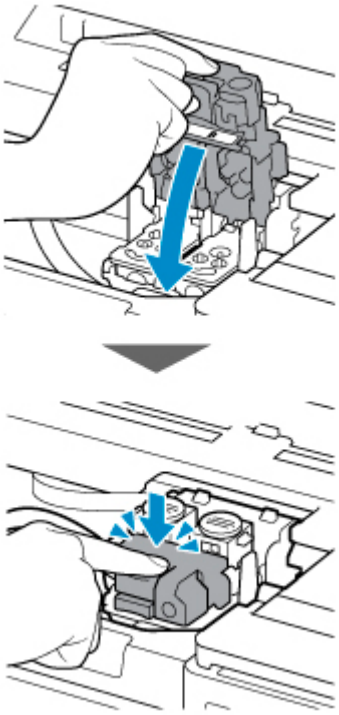

7. Press down both joint buttons.

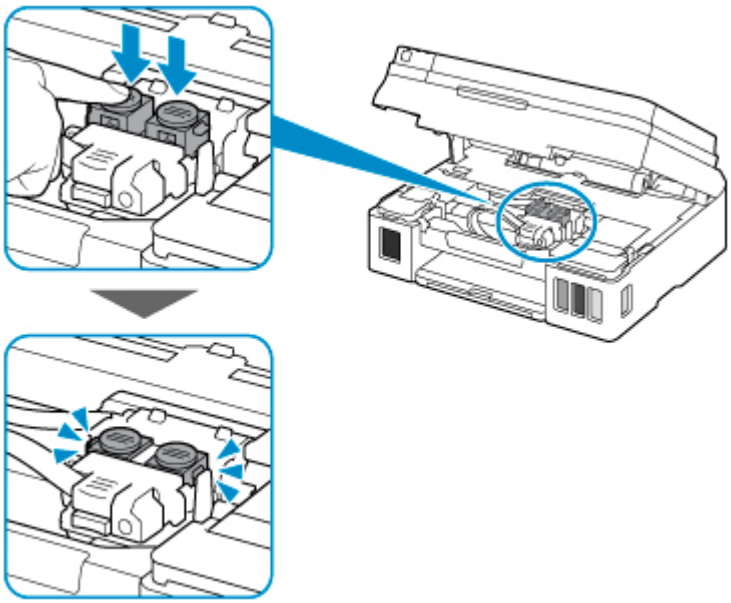

8. Close both ink tank covers.

9. Gently close the scanning unit / cover.

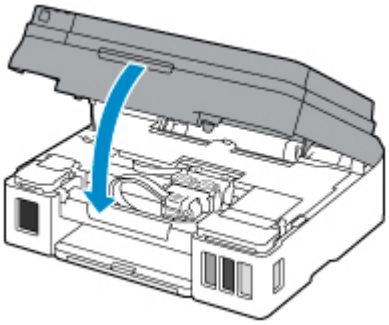

If this does not solve the problem, contact your nearest Canon service center to request a repair.

Important

- If you unplug the power cord, all the faxes stored in the printer's memory are deleted.
- Do not tilt the printer when moving it since the ink may leak out.
- When transporting the printer for repairing it, see Repairing Your Printer.

1640

Cause

The 1640 support code signifies that the printer has detected that the remaining ink in one or more of the ink tanks may have reached the lower limit line shown on the ink tank.

What to Do

To check the remaining ink level, visually inspect the remaining ink in the ink tank. The action you should take to resume operating the printer depends upon which function(s) of the printer you intend to use.

1. To PRINT or COPY

If you intend to PRINT or COPY, you should take one of the following steps by following the printer's instruction:

(a) Disable the function for notifying you of the remaining ink level. If there is some residual amount of ink in the tank(s), you will be able to PRINT or COPY until the remaining ink is depleted, although image quality may diminish as the remaining ink in the tank(s) becomes depleted.

Please note that if you continue to PRINT or COPY when the remaining ink is below the lower limit line, the printer may consume excess ink as it attempts to return to normal image quality after it is refilled with ink.

To restore that function for notifying you of the remaining ink level, refill the ink tank(s) up to the upper limit line shown on the ink tank(s).

OR

(b) Refill the ink tank with the corresponding color of ink up to the upper limit line shown on the ink tank.

2. To SCAN or FAX

If you intend to SCAN (or FAX if your printer has that capability), you should take one of the following steps by following the printer's instruction:

(a) Disable the function for notifying you of the remaining ink level. You will then be able to SCAN (or FAX if your printer has that capability). To restore that function, refill the ink tank(s) up to the upper limit line shown on the ink tank(s).

OR

(b) Refill the ink tank with the corresponding color of ink up to the upper limit line shown on the ink tank.

1700

Cause

Ink absorber is almost full.

What to Do

Press the printer's **OK** button to continue printing. Contact your nearest Canon service center to request a repair.

Important

- If you unplug the power cord, all the faxes stored in the printer's memory are deleted.
- Do not tilt the printer when moving it since the ink may leak out.
- When transporting the printer for repairing it, see Repairing Your Printer.

Note

- In the case of warnings or errors caused by remaining ink levels, the printer cannot print or scan.

1890

Cause

Protective material or tape may still be attached to cartridge holder.

What to Do

Open the scanning unit / cover and make sure the protective material and tape have been removed from the cartridge holder.

If the protective material or tape is still there, remove it and close the scanning unit / cover.

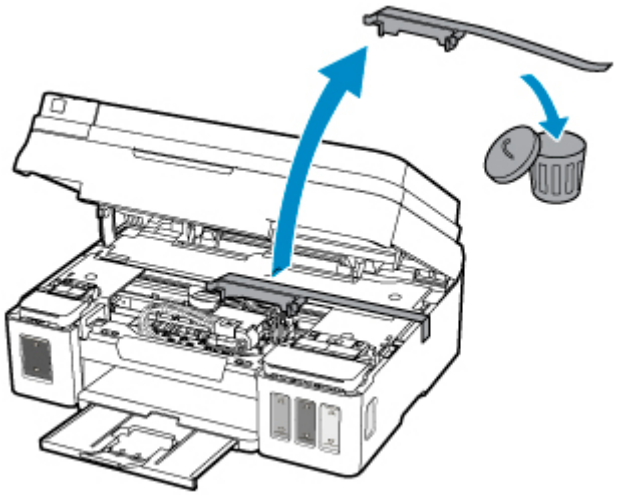

If this does not solve the problem, contact your nearest Canon service center to request a repair.

Important

- If you unplug the power cord, all the faxes stored in the printer's memory are deleted.
- Do not tilt the printer when moving it since the ink may leak out.
- When transporting the printer for repairing it, see Repairing Your Printer.

2900

Cause

Scanning print head alignment sheet failed.

What to Do

Press the printer's **OK** button and check the following.

- Make sure the print head alignment sheet is set in the correct position and orientation on the platen glass.
- Make sure the platen glass and the print head alignment sheet are not dirty.
- Make sure the loaded paper is correct.

  For print head alignment, load A4 or Letter-sized plain paper.

- Make sure the print head nozzle is not clogged.

  Check the print head condition by printing the nozzle check pattern.

After checking the above, start over auto print head alignment from the beginning.

If the error is still not resolved, try manual print head alignment.

2901

Cause

Print head alignment pattern has been printed and printer is waiting to scan sheet.

What to Do

Scan the printed alignment pattern.

1. Load print head alignment sheet on platen glass.

   Place the printed side down and align the mark ◢ in the bottom right corner of the sheet with the alignment mark ⬊.

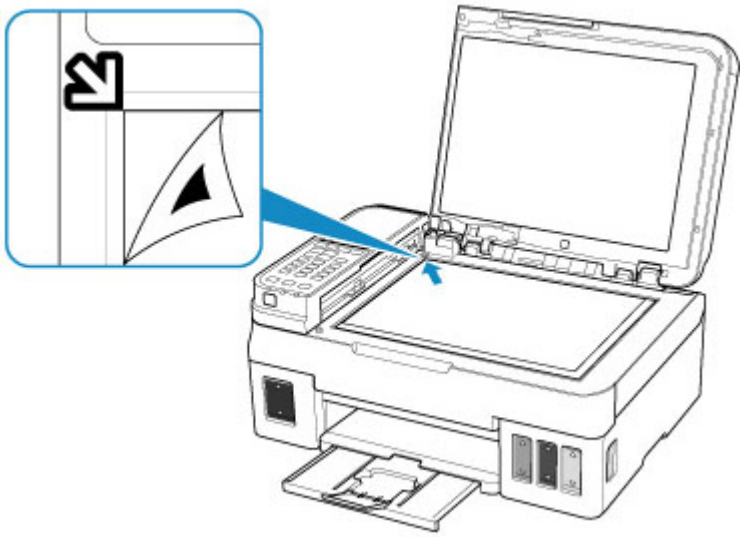

2. Slowly close the document cover and press printer's **Black** or **Color** button.

   The printer starts scanning the print head alignment sheet, and automatically adjusts the print head position.

4103

Cause

Cannot perform printing with current print settings.

What to Do

Press the printer's **Stop** button to cancel printing.

Then change the print settings and retry printing.

5011

Cause

Printer error has occurred.

What to Do

Turn off the printer and unplug it.

Plug in the printer again and turn it back on.

If this does not solve the problem, contact your nearest Canon service center to request a repair.

Important

- If you unplug the power cord, all the faxes stored in the printer's memory are deleted.
- Do not tilt the printer when moving it since the ink may leak out.
- When transporting the printer for repairing it, see Repairing Your Printer.

5012

Cause

Printer error has occurred.

What to Do

Turn off the printer and unplug it.

Plug in the printer again and turn it back on.

If this does not solve the problem, contact your nearest Canon service center to request a repair.

Important

- If you unplug the power cord, all the faxes stored in the printer's memory are deleted.
- Do not tilt the printer when moving it since the ink may leak out.
- When transporting the printer for repairing it, see Repairing Your Printer.

5100

Cause

Printer error has occurred.

What to Do

Cancel printing and turn off the printer.

Check the following:

- Make sure cartridge holder motion is not impeded by stabilizer, jammed paper, etc.

  Remove any impediment.

- Make sure the cartridges are properly installed.

  Open the scanning unit / cover, and then push the cartridge locking cover to make sure the cartridges are installed properly.

  Alternatively, push the joint buttons until they click into place.

Turn the printer back on.

If this does not solve the problem, contact your nearest Canon service center to request a repair.

Important

- When clearing an impediment to cartridge holder motion, be careful not to touch clear film (A), white belt (B), or tubes (C).

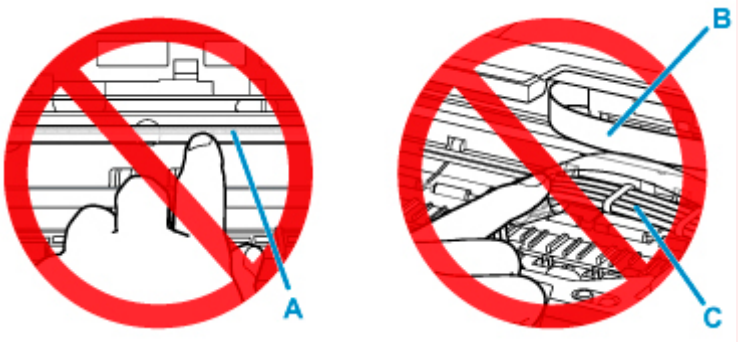

  If you soil or scratch these parts by touching them with paper or your hand, it could damage the printer.

- If you unplug the power cord, all the faxes stored in the printer's memory are deleted.
- Do not tilt the printer when moving it since the ink may leak out.
- When transporting the printer for repairing it, see Repairing Your Printer.

5200

Cause

Printer error has occurred.

What to Do

Check the remaining ink level, and then refill the ink tank if necessary.

Turn off the printer and unplug it.

Wait about 10 minutes.

Plug in the printer again and turn it back on.

If the ink tank is refilled because it runs out of ink, perform Ink Flush.

- How to Do Ink Flush

For Windows, you can also perform Ink Flush from your computer.

- Cleaning the Print Heads

If this does not solve the problem, contact your nearest Canon service center to request a repair.

Important

- If you unplug the power cord, all the faxes stored in the printer's memory are deleted.
- Do not tilt the printer when moving it since the ink may leak out.
- When transporting the printer for repairing it, see Repairing Your Printer.

5B00

Cause

Printer error has occurred.

What to Do

Contact your nearest Canon service center to request a repair.

Important

- If you unplug the power cord, all the faxes stored in the printer's memory are deleted.
- Do not tilt the printer when moving it since the ink may leak out.
- When transporting the printer for repairing it, see Repairing Your Printer.

Note

- In the case of warnings or errors caused by remaining ink levels, the printer cannot print or scan.

6000

Cause

Printer error has occurred.

What to Do

If the paper is jammed, remove it depending on the jammed location and cause.

List of Support Code for Error (Paper Jams)

Turn off the printer and unplug it.

Plug in the printer again and turn it back on.

If this does not solve the problem, contact your nearest Canon service center to request a repair.

Important

- If you unplug the power cord, all the faxes stored in the printer's memory are deleted.
- Do not tilt the printer when moving it since the ink may leak out.
- When transporting the printer for repairing it, see Repairing Your Printer.