Canon

imageRUNNER ADVANCE DX

C357iF
C257iF

Service Guide

Published by
Canon U.S.A., Inc.
One Canon Park
Melville, NY 11747
1-800-OK-CANON
E-Mail: serviceplanning@cusa.canon.com

Canon U.S.A. Homepage: http://www.usa.canon.com
Canon U.S.A. Internet e-Support Center Website: http://www.support.cusa.canon.com
Canon U.S.A. Partner Portal Website: https://partners.usa.canon.com

Distributed in the United States by Canon U.S.A., Inc.

IMPORTANT

THIS SERVICE GUIDE INCLUDES THE INFORMATION RELATING TO THE imageRUNNER ADVANCE DX C357iF and imageRUNNER ADVANCE DX C257iF.

SPECIFICATIONS AND OTHER INFORMATION CONTAINED HEREIN MAY VARY SLIGHTLY FROM ACTUAL DEVICE VALUES OR THOSE FOUND IN ADVERTISING AND OTHER PRINTED MATTER.

USE OF THIS SERVICE GUIDE SHOULD BE STRICTLY SUPERVISED TO AVOID DISCLOSURE OF CONFIDENTIAL INFORMATION.

ALL PRICES LISTED ARE SUBJECT TO CHANGE WITHOUT NOTICE.

PART NUMBERS LISTED MAY BE CHANGED WITHOUT NOTICE TO REFLECT ENGINEERING REVISIONS.

REVISION HISTORY

Revision	Date	Sections	Details
—	July 2020	All	Release of the imageRUNNER ADVANCE DX C357iF Series Service Guide.
1	July 2020	I, III, and VI	Update features and options for new and discontinued options
2	August 2020	All	Announce availability of imageRUNNER ADVANCE DX C257iF model.
3	October 2020	I	Introduce Unified Firmware Platform V3.11 and its features
4	March 2021	I	Introduce Unified Firmware Platform V3.12 and its features
5	February 2022	I, III, IX	NFC option is no longer available for purchase
6	April 2022	I	• Introduce Unified Firmware Platform V3.13 and its features • MiCard option no longer available for purchase
7	September 2022	I	Introduce Unified Firmware Platform V3.13-2 and its features
8	March 2023	I	Updates references of the Unified Firmware Platform to the UFP Features Reference Manual.

COPYRIGHTS AND TRADEMARKS

This Service Guide is the property of Canon U.S.A., Inc.
© Canon U.S.A., Inc. 2023. All rights reserved.

Canon, imageRUNNER, and Always Ask for Canon Genuine Toner, Parts & Supplies are registered trademarks of Canon Inc. imageWARE is a registered trademark of Canon U.S.A., Inc.

All other company names and product names may be trademarks or registered trademarks of their respective owners, and are hereby acknowledged.

LEGAL NOTICES

The information contained in this Service Guide constitutes confidential information of Canon U.S.A., Inc.

Pursuant to the authorized Service Agreement with Canon U.S.A., Inc., this Service Guide is solely for reference purposes and may be used only by an authorized Service Provider of Canon U.S.A., Inc. No part of this Service Guide may be reproduced or transmitted in any form by any means, electronic or mechanical, for any purpose without the prior written consent of Canon U.S.A., Inc., except as expressly permitted herein.

Pursuant to the authorized Service Agreement with Canon U.S.A., Inc., the Service Provider agrees to indemnify Canon U.S.A., Inc. and to hold it harmless from and against any and all claims arising out of Service Provider's possession, use, or misuse of this Service Guide.

As an authorized Canon dealership for the imageRUNNER ADVANCE DX C357iF/C257iF Series you agree that the imageRUNNER ADVANCE DX C357iF Series and its related hardware/software accessories will not be exported from the United States except in strict accordance with the Export Administration Regulations of the U.S. Department of Commerce and other U.S. laws and regulations controlling exports from the United States.

Canon U.S.A., Inc. from time to time updates this online Service Guide and may modify the information and/or specifications contained in it at any time without notice. Additionally, all prices and availability dates listed herein are subject to change without notice. The latest version is available online at the Partner Portal and e-Support Websites noted above. Please make certain that you are using the latest version. Specimens of Web pages included herein are for illustration purposes only.

DISCLAIMER

NEITHER CANON NOR ITS SUPPLIERS NOR ANY AUTHORIZED SERVICE PROVIDER SHALL BE LIABLE FOR PERSONAL INJURY OR PROPERTY DAMAGE (UNLESS CAUSED SOLELY AND DIRECTLY BY THE NEGLIGENCE OF CANON OR ANY AUTHORIZED SERVICE PROVIDER), LOSS OF REVENUE OR PROFIT, FAILURE TO REALIZE SAVINGS OR OTHER BENEFITS, EXPENDITURES FOR SUBSTITUTE EQUIPMENT OR SERVICES, LOSS OR CORRUPTION OF DATA, INCLUDING, WITHOUT LIMITATION, DATA STORED ON THE PRODUCT'S OPTIONAL HARD DISK DRIVE, STORAGE CHARGES OR OTHER SPECIAL, INCIDENTAL OR CONSEQUENTIAL DAMAGES CAUSED BY THE USE, MISUSE OR INABILITY TO USE THE PRODUCT, REGARDLESS OF THE LEGAL THEORY ON WHICH THE CLAIM IS BASED AND EVEN IF CANON OR ITS SUPPLIERS OR ANY AUTHORIZED SERVICE PROVIDER HAS BEEN ADVISED OF THE POSSIBILITY OF SUCH DAMAGES. NOR SHALL RECOVERY OF ANY KIND AGAINST CANON OR ITS SUPPLIERS OR ANY AUTHORIZED SERVICE PROVIDER BE GREATER IN AMOUNT THAN THE PURCHASE PRICE OF THE PRODUCT CAUSING THE ALLEGED DAMAGE. WITHOUT LIMITING THE FOREGOING, THE PURCHASER ASSUMES ALL RISKS AND LIABILITY FOR LOSS, DAMAGE OR INJURY TO PERSONS AND THE PROPERTY OF THE PURCHASER OR OTHERS ARISING OUT OF THE POSSESSION, USE, MISUSE, OR INABILITY TO USE THE PRODUCT NOT CAUSED SOLELY AND DIRECTLY BY THE NEGLIGENCE OF CANON OR ANY AUTHORIZED SERVICE PROVIDER.

Contents

I. Product Overview, New Features, Configuration, and Monthly Print/Copy Volume - 1
- **A. Overview - 1**
- **B. Unified Firmware Platform - 2**
- **C. Data Backup Service - 3**
- **D. Configuration - 4**
- **E. Monthly Copy/Print Volume - 9**

II. Hardware Accessory Options - 10
- **A. Cassette Module-AE1 - 10**
- **B. Cassette Feeding Unit-AJ1 - 10**
- **C. Cassette Feeding Unit-AK1 - 10**
- **D. Staple Finisher-Z1 - 10**
- **E. Copy Card Reader-F1 - 10**
- **F. IC Card Reader Box-D1 - 10**

III. System Features and Options - 11
- **A. Copy and Print Options - 11**
  1. PCL International Font Set-A1 - 11
  2. Barcode Printing Kit-D1 - 11
- **B. Universal Send Features - 11**
  1. Universal Send Trace & Smooth PDF - 11
  2. Universal Send Digital User Signature Kit-C1 - 11
- **C. Fax Options - 11**
  1. Super G3 2nd Line Fax Board-AT1 - 11
  2. IP FAX Expansion Kit-B1 - 11
- **D. Data Security and Wireless Options - 12**
  1. iR-ADV Security Kit-AQ1 for IEEE 2600.1 Common Criteria Certification - 12
  2. Connection Kit-A2 for Bluetooth LE - 12
  3. NFC Kit-E1 - 12
- **E. Accessibility Options - 13**
  1. ADF Access Handle-A1 - 13
  2. Braille Label Kit-F1 - 13

IV. Storage Capabilities - 14
- **A. Mail Box - 14**
- **B. Advanced Box - 15**
  1. Shared Folders - 15
  2. Personal Folders - 15
- **C. Network - 16**
- **D. Memory Media - 16**

V. Security Features - 17
- **A. Device Authentication - 17**
  1. ULM (Universal Login Manager) - 17
  2. Department ID Management - 17
  3. UA (Universal Authentication) - 18
  4. Access Management System - 18
  5. uniFLOW Online Express - 18

B. Device Security ---- **19**
1. Verify System at Startup ---- 19
2. SIEM (Security Information and Event Management) Integration ---- 19
3. McAfee Embedded Control ---- 19
4. Security Policy Function ---- 20

C. Data Security ---- **21**
1. Initialize All Data/Settings Function ---- 21
2. HDD Data Erase Kit ---- 22
3. HDD Data Encryption Kit ---- 22
4. HDD Data Erase Scheduler ---- 22
5. TPM (Trusted Platform Module) ---- 23
6. Universal Send Security Feature Set ---- 24
7. Encrypted Secure Print Software ---- 24

D. Document Security ---- **25**
1. Secure Watermark ---- 25
2. Encrypted Secure Print Software ---- 25
3. PDF Visible Digital Signature ---- 25
4. Adobe LiveCycle Rights Management ES Server Integration ---- 26

E. Network Security ---- **27**
1. IP Sec ---- 27
2. Filtering by Port Number ---- 27
3. Encryption and Authentication ---- 27
4. Network Port and Application Access Control ---- 28

VI. Software Solutions ---- **29**

A. Document Management and Binding Software ---- **29**
1. eCopy PDF Pro Office ---- 29

B. Scan Management Software ---- **30**
1. Authorized Send ---- 30
2. uniFLOW (Scanning) ---- 30
3. eCopy ShareScan ---- 30

C. Print/Output Management Software ---- **31**
1. uniFLOW ---- 31
2. uniFLOW Online ---- 31
3. AA-PRINT (Advanced Anywhere Print) ---- 32
4. EFI PrintMe ---- 32

D. Device Security and Management Software ---- **33**
1. uniFLOW Device Security & Management ---- 33
2. uniFLOW Serverless Secure Print ---- 33
3. imageWARE Enterprise Management Console and Plug-ins ---- 33
4. imageWARE Secure Audit Manager Express ---- 34
5. MEAP Web ---- 34
6. MDS Cloud ---- 34

E. Business Workflow Software ---- **35**
1. Forms and Print Services for Salesforce ---- 35
2. Canon Enterprise Imaging Platform ---- 35

VII. Dealer Sales/Service Authorization ---- **36**

VIII. Educational Training ---- 36
A. Training Program Overview ---- 36
B. imageRUNNER ADVANCE DX C357/C257 Series Training ---- 36
1. Learning Path for New Service Technicians ---- 36
2. Learning Path for Technicians with imageRUNNER ADVANCE C350iF and C250iF Certification ---- 37
3. Recommended Training for Technicians with imageRUNNER ADVANCE C356iF III and C256iF III Certification ---- 37
C. Certification ---- 38
D. Who Should Attend ---- 38
E. Course Format ---- 38
F. Training Facilities ---- 38
G. Course Equipment ---- 38
H. Service Materials ---- 39
I. uniFLOW Online Training ---- 39
J. uniFLOW Online Express Training ---- 39
K. Data Backup Service Training ---- 39

IX. Servicing Notes ---- 40
A. Power and Plug Requirements ---- 40
B. Installation Space Requirements ---- 42
C. Estimated Installation Times ---- 44
D. Serviceability ---- 45
E. Remote Services ---- 46
1. imageWARE Remote ---- 46
2. Content Delivery System ---- 48
3. Remote Services Suite ---- 51
F. Device Configuration Management ---- 53
1. DCM (Device Configuration Manager) ---- 53
2. Device Migration Navigator ---- 53
G. LMS (License Management System) ---- 54
H. Content Delivery System Website ---- 55
I. Recommended System Engineer Requirements ---- 56
J. Firmware Upgrades Using the Service Support Tool ---- 57
K. Hard Disk Drive Handling ---- 58
L. Special Tools, Solvents and Oils ---- 58
M. Consumables ---- 59
N. Consumable Parts ---- 61
O. Periodically Replaced Parts ---- 61
P. Counters ---- 62
1. Soft Counters ---- 62
2. MEAP Counter ---- 63
3. Toner Bottle Counters ---- 64
Q. Less Maintenance for Service Cost and Downtime Reduction ---- 65
1. Installation/Parts Replacement by Nontechnical Staff Option ---- 66
2. Remote Support ---- 76

X. Limited Warranty Support ---------- 78
A. End-User Limited Warranty Conditions ---------- 78
B. GPR-58 Drum Unit Limited Warranty ---------- 78
C. Warranty Programs ---------- 79
1. Flat-Rate Program ---------- 79
2. Warranty Parts for Repair ---------- 79
3. e-Tag ---------- 79
4. Parts Support Program ---------- 79

XI. Product Technical Support Offerings ---------- 80
A. Canon USA Technical Support Center ---------- 80
B. Technical Support Escalation ---------- 81
C. Internet Support ---------- 82
D. Canon USA's Partner Portal Website ---------- 82

XII. Appendix ---------- 83
A. Specifications ---------- 83
B. Canon imageRUNNER ADVANCE DX C357iF Series Limited Warranty ---------- 95
C. List of Tables ---------- 96
D. List of Figures ---------- 97

I. Product Overview, New Features, Configuration, and Monthly Print/Copy Volume

A. Overview

The Canon imageRUNNER ADVANCE DX C357iF Series consists of the imageRUNNER ADVANCE DX C357iF and imageRUNNER ADVANCE DX C257iF. The imageRUNNER ADVANCE DX C357iF Series comes standard-equipped with UFP V3.10.

The imageRUNNER ADVANCE DX C357iF Series are LTR (A4), color, MFPs (Multi-Function Printers), and bring these capabilities to users in a mid-volume, small, or remote office environment:

- Prints in color and B&W (Black-and-White) in speeds of up to 36 ppm (pages per minute) for the imageRUNNER ADVANCE C357iF, and up to 26 ppm for the imageRUNNER ADVANCE C257iF (using letter-sized (LTR) paper).
- Standard Universal Send, ULM (Universal Login Manager)[1], UFR II, PCL6, Adobe PostScript 3, PDF/XPS/TIFF/JPEG Direct Printing, Remote Operator's Software Kit, Wireless LAN support, HDD Encryption Kit, and Scan to Word and PowerPoint (OOXML).
- Standard single-pass, duplex, automatic document feeder with an up to 100-sheet capacity (LTR (20 lb bond (80 g/m^2)).
- A 10.1" WSVGA with soft keys, flat, adjustable control panel with flick and pinch and drag-and-drop actions, similar to the technology used on smartphones. The flat control panel supports video guidance for maintenance..
- uniFLOW Online and uniFLOW Online Express support.
- A maximum paper size of 8 1/2" x 14" (LGL) is supported. Multiple paper sources, including optional cassette modules, can hold up to 2,300 sheets of paper (20 lb bond (80 g/m^2)).
- Inter-device link functionality enables imageRUNNER ADVANCE DX C357iF Series machines, with a network connection, to connect to other imageRUNNER ADVANCE and imageRUNNER ADVANCE DX host models with an Advanced Box. This enables the imageRUNNER ADVANCE DX C357iF Series machine to act as a client, and share the Scan to and Print functions from the Advanced Box of the host imageRUNNER ADVANCE or imageRUNNER ADVANCE DX machine. Client imageRUNNER ADVANCE DX C357iF Series machines can also share remote address books.
- Standard USB 3.0 memory support from the USB port on the back of the machine only. One USB port is located on the right side of the color image reader, and can be used for scanning, printing, or direct printing from a USB memory stick.
- An Authentication System that enables users to personalize and customize their displays, settings, and functions.
- Direct connection to the machine from mobile devices through the Wireless LAN.

1 ULM is available as a download, and the customer must have an Internet connection. To download ULM, contact a local authorized Canon dealer.

B. Unified Firmware Platform

The UFP (Unified Firmware Platform) provides a common firmware base across all imageRUNNER ADVANCE DX devices. This makes it possible to unify development, and reflect the same functions and the latest specifications in all supported imageRUNNER ADVANCE DX devices.

UFP updates are performed on a regular basis, and include new specifications and enhancements. Critical bug fix firmware updates are released as needed.

The UFP offers the following features and benefits to the imageRUNNER ADVANCE DX devices.

- Consistent firmware updates across the imageRUNNER ADVANCE DX devices in your fleet.
- New features and error fixes are applied to all imageRUNNER ADVANCE DX devices in your fleet at one time.

See the *Unified Firmware Platform Features Reference Manual* available on the Partner Portal and e-Support for the latest UFP release available for this model series, and the new features introduced with that release.

C. Data Backup Service

The Data Backup Service automatically backs up data to a cloud-based server that is hosted by Canon Business Imaging Online. The end-user administrator can execute the Data Backup Service. The Data Backup Service backs up the imageRUNNER ADVANCE DX device's User mode settings, Address Book, Registration Settings, Quick Menu Settings, Main Menu Settings, Box Settings, Universal Data Settings, Personal Settings, and Service Mode Settings. Customer data is not backed up to the Data Backup Service, with the exception of the Address Book.

The service technician can restore the address book and settings listed above from the cloud-based server to the existing or replaced Hard Disk Drive of the imageRUNNER ADVANCE DX device.

Training is required for the servicing dealer to enroll in the Data Backup Service, and for the service technician to receive support from the Technical Support Center. Refer to the Canon USA's e-Support Center Website Training Center for details.

D. Configuration

Note: All configurations shown are for *reference purposes only*, and are subject to change without notice. Please refer to the Dealer Price List on the Partner Portal for the most up-to-date item numbers.

Table 1 – Configuration

Item	Part Number[2]
imageRUNNER ADVANCE DX C357iF	
imageRUNNER ADVANCE DX C357iF[3] [4]	3881C003AA
imageRUNNER ADVANCE DX C257iF[3] [4]	3882C002BA

2 Part numbers are subject to change without notice.

3 Ships standard with one 100 sheet Single Pass Duplexing Automatic Document Feeder, Envelope Feeder Attachment, 550-sheet Cassette, 100-sheet Stack Bypass, UFRII/PCL/PS Printing,Direct PDF/XPS Printing, Color Universal Send with PDF High Compression, Encrypted PDF, Digital Signature PDF(Device and User Signature), Trace and Smooth PDF, Fax, Searchable PDF/XPS, OOXML (Scan to PPT and Word), Universal Login Manager (Requires Download), uniFLOW Online Express, Access Management System, HDD Data Erase, Data Encryption (FIPS-140-2), IP Sec, Encrypted Secure Print, Secure Watermark, Color Image Reader, Web Browser, Ethernet 1000Base-T/100Base-TX/10Base-T, USB 2.0/3.0 Connectivity, Wifi Connectivity, Remote Operator's Software Kit, Color Network ScanGear, 3 GB RAM, 250 GB HDD and Drum Unit.

4 For proximity card use, DX platform devices come standard with iC Card Reader Box. Any configuration requiring a Proximity Card Reader is an additional purchase. (ex. uniFLOW MiCard PLUS).

Table 2 – Hardware Accessories

Item	Part Number[2]
Cassette Module-AE1[5, 6]	1409C002AA
Cassette Feeding Unit-AJ1[7, 6]	9579B003AA
Cassette Feeding Unit-AK1[6, 8]	9580B003AA
Staple Finisher-Z1[9]	1410C001AA
USB Keyboard (Cherry)[10]	1266V426
Universal Keyboard Stand-A1	2212V477
Card Reader Assembly for Universal Keyboard Stand[11]	2212V478
Copy Card Reader-F1[12, 13]	4784B001AA
Copy Card Reader Attachment Kit-B5	3684B005AA
Canon Card Set-A1 (1-30)	4781B001AA
Canon Card Set-A2 (31-100)	4781B002AA
Canon Card Set-A3 (101-200)	4781B003AA
Canon Card Set-A4 (201-300)	4781B004AA
Canon Card Set-A5 (301-500)	4781B005AA
Canon Card Set-A6 (501-1000)	4781B006AA
ADF Access Handle-A1	1095B001AA
Copy Control Interface Kit-A1[13]	3726B001AA
Braille Label Kit-F1	7518A004AA
Convenience Stapler-A1 (White)[14]	1348V957

2 Part numbers are subject to change without notice.

5 Adds one additional 550-sheet cassette for desktop use. The total paper capacity becomes approximately 1,200 sheets (550 x 2 + 100-sheet multipurpose tray).
6 The optional Cassette Module-AE1, Cassette Feeding Unit-AJ1, and Cassette Feeding Unit-AK1 cannot be installed at the same time.
7 Adds one additional 550-sheet cassette and a wheeled stand for floor use. The total paper capacity becomes approximately 1,200 sheets (550 x 2 + 100-sheet multipurpose tray).
8 Adds three additional 550-sheet cassettes and a wheeled stand for floor use. The total paper capacity becomes approximately 2,300 sheets (550 x 4 + 100-sheet multipurpose tray).
9 The optional Staple Finisher-Z1 includes only one staple cartridge with 5,000 staples.
10 When installing the USB Keyboard, it is recommended to install the Universal Keyboard Stand-A1.
11 Attaches to the Universal Keyboard Stand-A1 for card reader authentication.
12 Requires the Copy Card Reader Attachment Kit-B5.
13 The Copy Control Interface Kit-A1 and the Copy Card Reader-F1 cannot be installed together.
14 A standalone stapler that corner or double staples up to 50 sheets.

Table 3 – System Accessories

Item	Box Part Number[2]	eLAN Number[15]
Super G3 2nd Line Fax Board-AT1	1478C002AA	–
IP FAX Expansion Kit-B1[16]	–	0170C004AA
PCL International Font Set-A1	–	4821B003AA
Barcode Printing Kit-D1	–	3999B004AA
MEAP Web Connection Kit V5.6	–	4848B117AA
NFC Kit-E1[17]	–	–
Connection Kit-A2 for Bluetooth LE	4041C001AA	–
iR-ADV Security Kit-AQ1 for IEEE 2600.1 Common Criteria Certification Set[18]	TBD	–
HDD Data Erase Scheduler V3.1.3	–	4164BV44AC
HDD Data Erase Scheduler V3.1.3 NFR	–	4164BV45AC

2 Part numbers are subject to change without notice.

15 The eLAN (Electronic License Access Number) is delivered via the CNA (Canon Network Access) section of the Partner Portal, and installed via CDS.
16 Cannot be installed with the optional Super G3 2nd Line Fax Board-AT1.
17 No longer available for purchase.
18 Includes the iR-ADV Security Kit-AQ1 for IEEE 2600.1 Common Criteria Certification. Specified configurations and settings need to be applied to the device to achieve and maintain IEEE 2600.1 Common Criteria Certification. Cannot be configured with the MEAP Web Connection Kit, IP FAX Expansion Kit, Copy Card Reader-F1, NFC Kit, Connection Kit for Bluetooth LE, and some imageWARE or MEAP applications.

Table 4 – imageRUNNER ADVANCE Integrated Solutions

Item	Box Part Number[2]	eLAN Number[15]
Authorized Send V7.1 (1 License)[19, 20]	–	4224C009AB
Authorized Send V7.1 (10 Licenses)[19, 20]	–	4224C010AB
Authorized Send V7.1 (100 Licenses)[19, 20]	–	4224C011AB
Authorized Send V7.1 (1 License NFR) [19, 20, 21]	–	4224C012AB
Authorized Send to Fax V7.1 (1 License)[19, 20]	–	4224C014AB
Authorized Send V7.1 Add-on Option (1 License) [19, 20]	–	4224C015AA
Authorized Send V7.1 Worldox Add-on Option (1 License) [19, 20]	–	4224C016AA
Authorized Send V7.1 Barcode Recognition Add-on Option V1.0 (1 License)[19, 2019, 20]	–	4224C017AA
Authorized Send V7.1 Fax Server Add-On Option (1 License) [19, 20]	–	4224C018AA
MiCard PLUS SC[17 22]	-	–
AA-PRINT V1.5 Gen3[19]	–	4164BT59AA
AA-PRINT V1.5 1L Gen3 NFR	–	4164BT60AA
MEAP for PaperCut Gen3+	–	4848B117AA
Object Generator (for AS400 printing) License with 3 year Maintenance[23]	-	4223C001AA
Object Generator Additional 1 year Maintenance	-	4223C002AA
mxHero Secure Scan to Email[24 25 26 27]		2659C060AA

2 Part numbers are subject to change without notice.
15 The eLAN (Electronic License Access Number) is delivered via the CNA (Canon Network Access) section of the Partner Portal and installed via CDS.
17 No longer available for purchase.

19 The Jar file can only be downloaded from http://www.canon.com/fau/downloads.
20 The software or kit must be installed via CDS.
21 Up to three (3) NFR packages per showroom location are available.
22 Supports 35 different proximity card types. Go to the Partner Portal for a complete list of supported card frequencies.
23 The eLAN (Electronic License Access Number) is delivered via the CNA (Canon Network Access) section of the Partner Portal. The software is provided through the e-Support Center Website.
24 mxHero license is only available for purchase through Canon Business Services.
25 mxHero Secure Scan to Email licenses are sold per device, per year, while prorated by month. All purchases are paid up-front.
26 Minimum license purchase term is 1 year, and maximum license purchase term is 5 years.
27 This item can be ordered by any Dealership without engaging Canon U.S.A. Professional Services (CIIS), as long as at least one Systems Engineer from the Dealership has completed the mxHero Training course and passed the certification test.

Table 5 – Supplies and Consumables

Item	Part Number[2]
GPR-58 Drum Black	2186C003AA
GPR-58 Drum Cyan	2187C003AA
GPR-58 Drum Magenta	2188C003AA
GPR-58 Drum Yellow	2189C003AA
GPR-58 Toner Black	2182C003AA[28]
GPR-58 Toner Cyan	2183C003AA[29]
GPR-58 Toner Magenta	2184C003AA[30]
GPR-58 Toner Yellow	2185C003AA[31]
Staple-P1[32]	1008B001AA

2 Part numbers are subject to change without notice.

28 May also receive 2182C003BA.
29 May also receive 2183C003AB.
30 May also receive 2184C003AB.
31 May also receive 2185C003AB.
32 Used for corner stapling only. Contains two cartridges per case, and 5,000 staples per cartridge.

E. Monthly Copy/Print Volume

The maximum print/copy monthly volume is the maximum number of pages the machine can produce within a one-month period (based on letter size paper). However, the device should not be used to produce the maximum number of pages, or a greater volume, on a consistent monthly basis.

The optimum performance range is the volume range that the equipment was intended to run on a regular basis to maintain a high-level of performance and print/copy quality.

Table 6 – Monthly Copy/Print Volume

Model	Optimum Performance Range	Maximum Monthly Copy/Print Volume
imageRUNNER ADVANCE DX C357iF	1,000 to 10,000 copies/prints	Up to 90,000 copies/prints
imageRUNNER ADVANCE DX C257iF		Up to 70,000 copies/prints

II. Hardware Accessory Options

A. Cassette Module-AE1

- Adds one additional 550-sheet cassette (20 lb bond (80 g/m^2)).
- Paper weight: 16 lb bond to 60 lb cover (60 to 163 g/m^2)).

B. Cassette Feeding Unit-AJ1

- Adds one additional 550-sheet cassette (20 lb bond (80 g/m^2)), and a wheeled stand.
- Supports paper sizes up to 8 1/2” x 14”.
- Paper weight: 16 lb bond to 60 lb cover (60 to 163 g/m^2)).

C. Cassette Feeding Unit-AK1

- Adds three additional 550-sheet cassettes (20 lb bond (80 g/m^2)), and a wheeled stand.
- Supports paper sizes up to 8 1/2” x 14”.
- Paper weight: 16 lb bond to 60 lb cover (60 to 163 g/m^2)).

D. Staple Finisher-Z1

- Contains one tray, which can hold approximately 500 unstapled sheets (16 to 80 lb bond (60 to 220 g/m^2)).
- Can corner staple approximately 30 sheets of paper (LTR, 20 lb bond (80 g/m^2)).
- Can offset the stacked output.

E. Copy Card Reader-F1

- Supports up to 1,000 departments or users.
- Performs Department ID Management automatically. Users must insert a control card to access the machine.
- Requires the optional Copy Card Reader Attachment Kit-B5.
- Cannot be installed with the IC Card Reader Box-D1.

F. IC Card Reader Box-D1

- Provides a dedicated enclosure to secure a proximity card reader directly into the Automatic Document Feeder.
- Cannot be installed with the Copy Card Reader-F1.

III. System Features and Options

The functionality of the imageRUNNER ADVANCE DX C357iF Series is enhanced by the following system-related accessories.

A. Copy and Print Options

1. PCL International Font Set-A1

- Provides Andalé font support for the PCL driver.
- Enables the user to print in four Asian languages: Japanese, Chinese, Korean, and Taiwanese.
- Requires license activation via the LMS.

2. Barcode Printing Kit-D1

- Provides the ability to print 1D and 2D barcodes on output.
- Requires license activation via the LMS.

B. Universal Send Features

The Universal Send features are available as standard with the main engine.

1. Universal Send Trace & Smooth PDF

This standard feature enables the user to send Trace & Smooth PDF files.

2. Universal Send Digital User Signature Kit-C1

This standard feature enables the user to add a digital user signature obtained from a certificate authority to a PDF or XPS file. This allows the recipient of a PDF or XPS file to verify which user signed it.

C. Fax Options

1. Super G3 2nd Line Fax Board-AT1

Provides up to two lines to send and receive fax documents.

2. IP FAX Expansion Kit-B1

- Enables faxing over VoIP lines that support the T.38 Transmission Control Protocol.
- Cannot be installed with the Super G3 2nd Line Fax Board-AT1.
- Requires license activation via the LMS.

D. Data Security and Wireless Options

1. iR-ADV Security Kit-AQ1 for IEEE 2600.1 Common Criteria Certification

- Enables the user to configure security settings that are required to comply with the IEEE 2600.1 standard.
- Includes the IEEE 2600 License Certificate, Bootable CD with certified system software, IEEE 2600 User Manual CD, and Installation Manual.
- Cannot be used with the Super G3 2nd Line Fax Board-AT1 and some MEAP applications.

2. Connection Kit-A2 for Bluetooth LE

- Enables the user to connect their mobile devices to the machine via Bluetooth.
- The machine's Bluetooth setting and the Bluetooth setting on the user's mobile device must be enabled.

3. NFC Kit-E1

- NFC Kit[17] enables the user to connect their Android mobile devices to the machine via NFC (Near Field Communications).
- The Canon PRINT Business app must be installed and started on the user's Android device, and the "Use NFC Card Emulation" setting on the machine must be enabled.

17- No longer available for purchase.

E. Accessibility Options

1. ADF Access Handle-A1

Attaches to the Automatic Document Feeder to enable seated users to open the document feeder.

2. Braille Label Kit-F1

The Braille Label Kit includes labels written in Braille to help visually-impaired users identify parts of the machine, such as the control panel hard keys, and which paper size is loaded in a paper drawer.

IV. Storage Capabilities

The imageRUNNER ADVANCE DX C357iF Series machines offer four storage methods with flexible linkage to external systems for storing scanned documents and accessing stored files.

- Mail Box
- Advanced Box Client
- Network
- Memory Media

IMPORTANT

- Canon U.S.A., Inc. is not responsible for any damages caused to user data that is stored on the hard disk drive of the machine. It is the customer's responsibility to create and maintain a data back up plan. Canon U.S.A., Inc. (hereinafter referred to as ("Canon USA")) offers several security options to enhance document handling and storage security needs. See "System Options," on p. 11.
- It is strongly recommended to back up the data stored on the hard disk drive.

A. Mail Box

The Mail Box is a standard temporary data storage area that stores and handles files for printing.

The Mail Box function enables users to store files that are scanned with this machine, or data sent from a personal computer via the printer driver. The stored files can be printed anytime using the desired settings.

Up to 100 mailboxes can be used, and a name or password can be set for each mailbox. In addition, various editing features are available, such as merging separately stored files into one file, and erasing unnecessary pages from a file. Each mailbox can store up to 30,000 pages.

B. Advanced Box

Advanced Box is a storage area in the machine that stores scanned documents and Microsoft Office files that can be used on a computer. There are two types of storage in the Advanced Box: the Shared Space and the Personal Space.

1. Shared Folders

- An open access storage space. Ideal as a shared storage space by multiple users (for example, team, group, or department members).
- Subfolders can be created.
- Up to 1,000 files/folders (main and sub) can be saved in each level.

2. Personal Folders

- Access is restricted to the set user only. Authentication must be set up to enable a personal folder.
- Subfolders can be created.
- Up to 1,000 files/folders (main and sub) can be saved in each level.

IMPORTANT

It is strongly recommended to protect the Advanced Box folders from viruses. If the user's computer system has an antivirus system in place, add the Advanced Box folders to its list of folders to scan and protect.

Documents can be scanned with this machine, stored in the PDF, JPEG, or TIFF file format, and can also be printed on this machine at any time with the desired print settings. Starting with UFP 3.10, the user can search for files in the Advanced Box.

The Advanced Box can be opened to the public as an SMB (Server Message Block) server or WebDAV (Distributed Authoring and Versioning) server. This enables the user to access the Advanced Box from a computer, and store and share files in their native format, such as MS Word, Excel, and PowerPoint. To view and print these native format files from the Advanced Box, the user must access them via a computer.

The standard storage space for the Advanced Box is approximately 16 GB.

C. Network

The imageRUNNER ADVANCE DX C357iF Series machines are equipped with a collaboration function that enables them to be connected to other imageRUNNER ADVANCE machines via the SMB/WebDAV protocol. When one machine is connected to another machine, a user can select an Advanced Box in the other machine (if it is on the network) to store files or print a file that is stored in the other machine on this machine.

D. Memory Media

Memory Media can be inserted into the USB port on the side of the device. A document can be scanned with this machine and stored in memory media in the PDF, JPEG, XPS, OOXML, or TIFF file format, and then the file stored in the memory media can be printed on this machine at any time with the desired print settings.

When printing files from memory media, the maximum file size is 2 GB. Up to six files on the memory media can be printed at the same time. The maximum number of files on the USB memory media that can be displayed or stored is 1,000 (including folders).

V. Security Features

The imageRUNNER ADVANCE DX C357iF Series machines include a comprehensive set of security features, such as Device Authentication, Data Security, Document Security, and Network Security.

A. Device Authentication

There are several ways to authenticate users at the device. However, only one Log In application can be used at a time. The customer must decide which features of the Log In application are best for their company's needs.

1. ULM (Universal Login Manager)

ULM is a MEAP application, developed by NT-ware, which provides log in management capabilities, such as simple user authentication, Local Authentication, and Domain Authentication for Canon imageRUNNER ADVANCE DX devices. These user authentication methods use Picture Log In, PIN Codes, or Proximity Card Log In methods to gain access to the machine. Although, ULM is a server-less authentication solution, it can also integrate with the Access Management System for advanced security. Furthermore, ULM can be upgraded to the full uniFLOW platform, which provides mobile printing, secure printing, advanced security, and scanning workflow capabilities, along with a fully-automated statistics and reporting suite.

NOTE
ULM is available as a download, and the customer must have access to the Internet.

2. Department ID Management

Register a Department ID and password for each department, and manage the machine by limiting its use to only those who enter the correct Department ID and password. Department IDs and passwords for up to 1,000 departments can be registered. Use Department ID Management to keep track of the copy, scan, and print totals for each department. The following settings can be specified:

- Turn Department ID Management 'On' or 'Off'.
- Register the Department ID and password.
- Set page limits for scans, prints, and copies.
- Set whether to use Department ID Management for the Mail Box, Send, and Network Scan functions. If the Copy function is specified, it is automatically restricted when Department ID Management is set.
- Set up copy, scan, and print restrictions.
- Create users automatically.

3. UA (Universal Authentication)

A user authentication system that enables the functions of the machine and MEAP applications, to be used after being authenticated once. UA has two compatible user authentication systems (Domain Authentication and Local Device Authentication). Domain Authentication is linked to a domain controller in a Windows Active Directory environment on a network. Local Device Authentication uses a database inside the machine to authenticate users. Administrators can use one of these two systems or both at the same time. The Access Management System is a subset of the UA system.

4. Access Management System

The standard AMS (Access Management System) enables system administrators to restrict various Copy, Print, Scan, Mail Box, and Send functions that each user can use. Once the AMS is activated, a Function Level Log-In can be used to authenticate users for specific machine functions only. SSO-H must be activated to use the Log-In feature of the AMS.

5. uniFLOW Online Express

uniFLOW Online Express comes with the following features:

- Flexible authentication (for example, PIN Code or Card)
- Simple document scanning (for example, Scan to My E-Mail and Google Drive)
- Track print, copy, scan, and fax costs
- Cloud-based infrastructure

IMPORTANT

uniFLOW Online Express only supports TLS V1.2 and earlier.

Note: To install uniFLOW Online Express, training is not required. However, uniFLOW Online Express training is required to receive uniFLOW Online Express support from Canon's Technical Support Center. Dealers which have taken uniFLOW Online training, are automatically certified for uniFLOW Online Express. For more information on uniFLOW Online and uniFLOW Online Express training, go to the Training section on the e-Support Center Website.

B. Device Security

The imageRUNNER ADVANCE DX C357iF Series offers several ways to protect and secure the device, as described below.

1. Verify System at Startup

Verify System at Startup is a process that protects the device's BIOS, firmware, and MEAP applications from unauthorized modifications.

NOTE

- This process is performed at every device reboot.
- Verify System at Startup is disabled by default and, when activated, may increase the device warm-up time by 20 to 40 seconds, depending on the model.

2. SIEM (Security Information and Event Management) Integration

Enables the device to automatically send audit logs to SIEM systems for analysis and detection of security violations. Examples of the audit logs sent via the Syslog protocol (RFC5424 and RFC5426) include those for user authentication, mailbox operation, network authentication, and print jobs. Sending audit logs via TLS encryption (RFC5425) is also supported.

3. McAfee Embedded Control

Protects the machine's firmware, programs, and operating system from potential threats and malware. All firmware and applications are checked against a whitelist that enables only trusted firmware and applications to launch. This helps to prevent malware, and mitigates zero-day attacks.

NOTE

This function is set to 'Off' by default, and must be set to 'On' within the device settings. In addition, Verify System at Startup must be set to 'On' within the device settings.

4. Security Policy Function

The security policy function is used to collectively configure the security-related settings into one security policy. These settings can be protected by a dedicated password to achieve a high-level of security.

An Administrator can implement policy settings that comply with the security policies of his/her company in the devices under his/her charge to restrict people, other than the Administrator and end users, from using functions that do not comply with the policies, or from changing the setting values.

The information configured in the security policy can be exported or imported by using the DCM function or the iWEMC DCM Plug-In, and can be copied to multiple devices.

IMPORTANT

- Only an Administrator, who knows the security password, can disable the Security function or Service Mode password.
- Proper management and workflows are necessary for users who use the Security Policy function, and for machines that support this function.
- If an Administrator must log on to access the machine, it is necessary to notify the service technicians and the Call Center of support of these security policies, in case the Administrators or users forget their passwords. Therefore, a service technician must make an appointment with the Administrator, before a visit, so that the Security function can be disabled. Also, it is important to verify and establish a system to issue license keys.
- Users can also lock the Service Mode of the machine, and the Administrator must release it with their password.
- The passwords of the Administrator can be cleared from the Service Mode. However, if the Security Policy is set to restrict access to the Service Mode, then the Service Technician cannot clear passwords from the Service Mode. If the Administrator forgot his/her password, an HDD clear (clears many Settings/Registration settings and Service Mode settings) can be performed, or the Administrator can request a new password license from a local authorized Canon dealer. It is necessary to explain to the Administrator about the risk of any security policy specified, and request to manage the passwords.

C. Data Security

The imageRUNNER ADVANCE DX C357iF Series machines offer several ways to protect and secure data. It is strongly recommended that a backup and security system be in place, along with an antivirus protection system to make sure that no data on the hard disk drives are lost, stolen, or compromised.

There are several security methods available from Canon USA that addresses a customer's needs for securing data appropriately.

- Customer Accessible HDD Initialization Function (Initialize All Data/Settings)
- imageRUNNER ADVANCE Trusted Platform Module
- Standard HDD Data Erase Kit
- Standard HDD Encryption Kit
- Optional HDD Data Erase Scheduler software
- Standard Universal Send Security Feature Set
- Standard Encrypted Secure Print Software

CAUTION

Canon USA is not liable for any damages resulting from the loss or corruption of data. (See "DISCLAIMER," on p. ii for further details.)

1. Initialize All Data/Settings Function

The Initialize All Data/Settings function is a standard function on all Canon devices. This setting is available in the Management Mode, to which the System Administrator must authenticate. Performing this function, erases all user information on the hard disk drive of the machine (e.g., contact information, Advance Box client data, network settings, and image data) up to nine times, depending on the Administrator settings.

IMPORTANT

The Initialize All Data/Settings function deletes the FAT (File Allocation Table) and overwrites the target HDD data area with "0" (zeroes) one time.

2. HDD Data Erase Kit

The standard HDD Data Erase Kit is for environments that require additional data security measures. The HDD Data Erase Kit automatically overwrites image data that is written to the hard drive following each job performed at the machine. Image data is overwritten up to three times with random data, depending on the preferences set by the System Administrator. Other settings for the overwrite kit include the ability to overwrite once with null data and overwrite once with random data.

IMPORTANT

Increasing the amount of times the HDD Data Erase Kit overwrites data, may result in a loss of job productivity.

3. HDD Data Encryption Kit

The standard HDD Encryption feature is another security tool available for environments requiring additional data security measures, and can be used in conjunction with the HDD Data Erase feature to provide even greater security for data stored on the internal HDD. The HDD encryption chip is Common Criteria Certified (EAL level 2), and applies 256-bit AES (Advanced Encryption Standard) encryption to all data prior to being written on the HDD. This adds an additional layer of security to files stored on the HDD.

4. HDD Data Erase Scheduler

The HDD Data Erase Scheduler is a customized MEAP application. It enables an authenticated System Administrator to manually overwrite the machine's temporary image data on the hard disk drive, or to schedule a daily, weekly, or monthly time to have the machine automatically overwrite the temporary image data on the hard disk drive.

5. TPM (Trusted Platform Module)

TPM is a standard security chip (tamper resistant hardware) installed in the imageRUNNER ADVANCE DX C357iF Series machines. The TPM provides a facility for the secure generation of cryptographic keys, encrypts information stored on the internal HDD, and decrypts information read from the internal HDD. The public keys to encrypt confidential information are securely controlled by the TPM chip, and they can only be decrypted if the TPM releases the associated decryption key. If the HDD is removed from the machine, it will be difficult to retrieve data off that HDD since the encryption key for that data is stored in a separate location within the TPM.

CAUTION

Once the TPM setting is activated, if the end user fails to back up the TPM key, or if the end user loses the TPM key, it may result in permanent, unrecoverable data loss, for which Canon USA is not liable. (See "DISCLAIMER," on p. ii for further details.)

IMPORTANT

- If the TPM setting is activated and the TPM chip fails, the confidential information stored on the chip can only be recovered if Canon's service representative replaces the TPM chip and restores the original TPM key to the new chip. Immediately, back up the TPM key on a USB memory stick, after the TPM setting is activated.
- Only the System Administrator of the machine can back up the TPM key.
- For security reasons, the TPM key can only be backed up once. Store the USB memory with the backup data in a safe place.
- For the backup of the TPM key, it is recommended that a USB memory stick (supported system file: FAT32) with free space of 10 MB or more is used.
- The TPM seals the hardware components associated with the data, and the data cannot be accessed unless the specific TPM key is issued by the TPM chip. Therefore, setting the TPM mode to 'On', may affect service procedures and service costs (if not handled properly). It is strongly recommended that the System Administrator who has access to the TPM key be present for all service calls to prevent the loss of data and productivity of the machine.

6. Universal Send Security Feature Set

The send security features enable the user to encrypt PDF and Digital Device Signature PDF/XPS files, as well as set a password to send them safely to a file server or e-mail address. The user can also enable the recipient of a PDF or Digital Device Signature PDF/XPS file to verify which device scanned the file.

7. Encrypted Secure Print Software

The secure print software enables the user to encrypt print data sent from a computer by using the Secured Print function, and then decrypt it at the device.

D. Document Security

The imageRUNNER ADVANCE DX C357iF Series machines offer several document security modes to protect printed and distributed documents.

1. Secure Watermark

Enables the user to embed hidden text in the background of copies. The embedded text becomes visible when copies of the document are made on a copier.

2. Encrypted Secure Print Software

Enables the user to encrypt print data sent from a computer by using the Secured Print function, and then decrypt it at the device.

3. PDF Visible Digital Signature

The PDF Visible Signatures mode enables the user to view the device signature and user signature on a PDF file. Visible digital signatures and user signatures are displayed on the first page of the PDF file to account for the origin of the document. The System Administrator of the machine can set the Visible Signatures mode for all PDF documents or certain PDF documents created on the machine. This mode differentiates from the Digital Signature mode in that instead of having to access digital signature information from the document properties from the File menu, this information is displayed prominently on the first page of the document in the background, and is printed along with the document data, thereby deterring improper distribution of sensitive documents.

4. Adobe LiveCycle Rights Management ES Server Integration

Adobe LiveCycle enables System Administrators to set automatic document privileges and apply security policies by creating Policy Protected PDF files on the machine, even after document creation, using the Adobe LiveCycle Rights Management ES Server. Once a Policy Protected PDF document is created on the machine with this feature enabled, the PDF extension in Adobe Reader, upon attempt by a user to open a protected PDF, contacts the Rights Management Server to check the latest authorized users, expiration, auditing, and watermarking policies set by the System Administrator. These latest policies are then enforced by that application to ensure the information in that document remains secure.

IMPORTANT

- To generate a PDF linked with Adobe LiveCycle Rights Management ES Server, the Adobe LiveCycle Rights Management ES Server must be licensed, pre-configured by a System Administrator, and the machine must be connected to the Intranet or Internet.
- Encrypted PDF and PDF/A-1b documents are not compatible with Adobe LiveCycle Rights Management ES Server.

E. Network Security

The imageRUNNER ADVANCE DX C357iF Series machines secure network communications by using IP Sec (IP Security), filtering by port number, encryption and authentication, and network port and application control.

1. IP Sec

The IP Sec protocol is standard on the imageRUNNER ADVANCE DX C357iF Series machines. It ensures that information and communications over the network remain private by encrypting all inbound and outbound network traffic.

2. Filtering by Port Number

Port number filtering permits or rejects data packets from entering specific port numbers or a range of port numbers. Also, IP address filters to outbound connections can be applied. For example, if functions, such as Remote Copy and Universal Send are used, System Administrators can block or restrict users from sending files to specific IP addresses. This minimizes the risk of data from being sent out of the company to systems that are not trusted.

3. Encryption and Authentication

SSL (Secure Sockets Layer) protects data transferred over the network by encrypting file names and formats. The System Administrator can also add IPsec capabilities to secure Internet Protocol (IP) communications from lower layer protocols, such as TCP (Transmission Control Protocol) and UDP (User Datagram Protocol) by authenticating and encrypting each IP packet of a data stream across the Internet.

Additionally, the imageRUNNER ADVANCE DX C357iF Series supports IEEE 802.1X, which provides port-based authentication. Authentication involves communication between a supplicant, authenticator, and authentication server. The supplicant is authentication software on a client device. The client device (the imageRUNNER ADVANCE DX C357iF Series device) needs the supplicant to provide credentials, such as user names/passwords or digital certificates to the authenticator (a wireless access point). The authenticator then forwards the credentials to the authentication server (generally a RADIUS database) for verification. If the credentials are valid in the authentication server database, the client device can access resources located on the protected side of the network.

4. Network Port and Application Access Control

Network Port and Application Access Control enables System Administrators to set up only the necessary protocols, such as IPP, FTP, FTPS (UFP 3.10 and above), SNTP, SNMP, RAW, LPD, and others for transferring data. These protocols can be enabled or disabled. The System Administrator can also disable unneeded services, protocols, ports, and the potential paths of attack so that attacks on the machine can be minimized.

VI. Software Solutions

This chapter describes the optional software solutions that can be purchased to enhance the end user's experience and interaction with imageRUNNER ADVANCE DX machines. The various software solutions include document management and binding software, scan management, print/output management, device security, and business workflow software.

A. Document Management and Binding Software

1. eCopy PDF Pro Office

ePPO (eCopy PDF Pro Office[17]) is a network to desktop office scanning solution that enables end-users to create and share PDFs, edit PDF files, and convert PDF files into searchable, editable, and fully-formatted Microsoft Office or Corel WordPerfect files. ePPO also enables the user to tag PDF files for accessibility and Section 508 compliance.

17 No longer available for purchase.

B. Scan Management Software

1. Authorized Send

Authorized Send is a MEAP application, which enables walk-up users to distribute documents quickly and securely. Authorized Send is an adaptable solution that integrates and authenticates with a wide variety of authentication servers and enterprise systems using common protocols. Authorized Send permits only authorized users to scan and send documents to e-mail addresses, network file servers/folders, and fax servers. An end-user is able to specify scan settings, such as the paper size, resolution, brightness, and file format.

2. uniFLOW (Scanning)

uniFLOW enables users to capture and compress scanned data, customize workflows for each document type or per user, and archive documents.

3. eCopy ShareScan

eCopy ShareScan is an enterprise-ready, office scanning software solution that enables imageRUNNER ADVANCE DX C357iF Series devices to turn paper documents into digital data that can be edited, managed, and stored electronically.

C. Print/Output Management Software

1. uniFLOW

uniFLOW is a print/output management solution that can be customized to meet the needs of an organization. uniFLOW offers an organization of any size, a way to track printing and copying costs, secure sensitive documents, and enable users to print from any available printer on the network. uniFLOW also supports multiple methods of mobile printing that includes comprehensive job tracking.

2. uniFLOW Online

uniFLOW Online is a cloud-based secure printing and cost tracking solution. It is used to help businesses manage their print environment without having to invest in a print server infrastructure, and enables them to keep control of the full printing process.

uniFLOW Online contains these features:

- Flexible authentication (for example, PIN Code or Card)
- Secure Printing
- Send Print Jobs from Anywhere (mobile printing)
- Simple document scanning (for example, Scan to My E-Mail, Google Drive, OCR PDF, and image enhancement)
- Track print, copy, scan, and fax costs
- Cloud-based infrastructure

A trial is available at no charge, and includes all the features of uniFLOW Online. At the conclusion of the trial, and if the full uniFLOW Online solution has not been purchased, the following features will no longer be accessible:

- Secure Printing
- Send Print Jobs from Anywhere (mobile printing)
- A part of Simple Document Scanning (for example, image enhancement)

To purchase a license of uniFLOW Online, training is required. Training is required for uniFLOW Online or the uniFLOW Online trial from Canon's Technical Support Center. For more information on uniFLOW Online training, go to the Training section on the e-Support Center Website.

IMPORTANT

uniFLOW Online only supports TLS V1.2 and earlier.

3. AA-PRINT (Advanced Anywhere Print)

The AA-PRINT solution combines Universal Login Manager with secure anywhere printing. It is designed to provide a serverless print environment that enables end-users to print and track usage from anywhere within the network to any connected device by submitting their respective authentication credentials.

4. EFI PrintMe

EFI PrintMe is a cloud-based mobile print solution for the imageRUNNER ADVANCE Series that enables end-users to print electronic files from their mobile devices, such as smartphones, tablets, and laptops to a Canon imageRUNNER ADVANCE device through the EFI PrintMe Cloud Service. Files uploaded to the EFI PrintMe Cloud Server are secured with 128-bit encryption. Walk-up end-users can print documents from the EFI PrintMe Cloud Service to a registered imageRUNNER ADVANCE DX device that is connected to the Internet.

D. Device Security and Management Software

1. uniFLOW Device Security & Management

uniFLOW, the print/output management solution, includes multiple authentication methods to enable an organization to restrict machine access and functions on a per user basis. uniFLOW end-users must authenticate themselves either by entering their user name and password, or by using a smart card, proximity or magnetic card.

2. uniFLOW Serverless Secure Print

uniFLOW Serverless Secure Print is a secure printing and follow-me printing option that utilizes the end-user's client PC to store secure print jobs until the end-user can authenticate and release the secure print jobs at an imageRUNNER ADVANCE DX device. The imageRUNNER ADVANCE DX device then pulls the print job from the end-user's client PC. uniFLOW Serverless Secure Print is scalable and upgradeable to the full version of uniFLOW.

3. imageWARE Enterprise Management Console and Plug-ins

iW EMC (imageWARE Enterprise Management Console) is a Web-based networked device management utility that enables IT managers to control and manage all devices installed on the network from one central location. IT managers can discover devices, view device status, manage device settings, and notify users of device errors via e-mail.

The capabilities of imageWARE Enterprise Management Console can be expanded by using optional plug-in applications, such as the Address Book Management Plug-In (enables a System Administrator to retrieve an address book from one imageRUNNER ADVANCE DX device and deliver it to other imageRUNNER ADVANCE DX devices across the network). The optional plug-ins are available for IT managers and dealers through http://www.imageware.com, or to the dealer only through Canon U.S.A.'s e-Support Center Website http://www.support.cusa.canon.com.

4. imageWARE Secure Audit Manager Express

imageWARE Secure Audit Manager Express captures and archives the contents and attributes of all jobs performed on the device. This enables System Administrators to continuously track and archive network activities.

5. MEAP Web

MEAP Web enables development partners to create customized applications, which connect imageRUNNER ADVANCE DX C357iF Series machines to business applications and business process workflows by communicating through standard Web services and HTML protocols.

6. MDS Cloud

The Canon MDS (Managed Document Services) Cloud is a PAAS (Platform as a Service) solution. It consists of an MDS Collection and Configuration Agent, which is installed at the customer's site, to discover devices and gather information from a customer's complete fleet of devices, such as meter reads, manage job logs, remotely configure devices, third party device support, and manage consumables.

E. Business Workflow Software

1. Forms and Print Services for Salesforce

Forms and Print Services for Salesforce[17] is a cloud service that enables users to print and store reports and graphic sales data directly to their imageRUNNER ADVANCE DX machine without the need for print drivers.

17 No longer available for purchase.

2. Canon Enterprise Imaging Platform

Canon Enterprise Imaging Platform is a new middleware platform based on SOA (Service Oriented Architecture). It enables organizations to integrate enterprise applications with electronic and paper documents.

VII. Dealer Sales/Service Authorization

To obtain and maintain authorization to sell or service an imageRUNNER ADVANCE DX device, every Authorized Reseller's location must have at least one employee who has successfully completed the appropriate imageRUNNER ADVANCE DX device-training program, and who has been certified, as described in Educational Training.

VIII. Educational Training

A. Training Program Overview

The imageRUNNER ADVANCE DX C357/C257 Series Online Hardware Update identifies universal imageRUNNER ADVANCE DX platform enhancements and Unified Firmware Platform v3.10 service related enhancements required to successfully service the imageRUNNER ADVANCE DX C357/C257 machines in the field.

B. imageRUNNER ADVANCE DX C357/C257 Series Training

1. Learning Path for New Service Technicians

New service technicians are required to complete the learning path below to obtain certification on this product:

Table 7 – Training for New Service Technicians

Course Name[33]	Course Code[33]
1- Canon Foundations Online Training	19TCF00O
Canon Foundations Classroom	19TCF01C
imageRUNNER ADVANCE C350iF/C250iF Online Training	18IRTC350IF00O
imageRUNNER ADVANCE C355iF/C255iF Update Online Training	19IRTAC355UIF00O

33 Course names and course codes are subject to change without notice.

2. Learning Path for Technicians with imageRUNNER ADVANCE C350iF and C250iF Certification

This training path consists of an online Hardware Update course that prepares technicians who are currently certified on the imageRUNNER ADVANCE C350iF/C250iF Series to setup and service the imageRUNNER ADVANCE DX C357/C257 Series devices.

Table 8 – Training for Technicians with imageRUNNER ADVANCE C350iF and C250iF Certification

Course Name[33]	Course Code[33]
imageRUNNER ADVANCE C355iF/C255iF Update Online Training	19IRTAC355UIF00O

33 Course names and course codes are subject to change without notice.

3. Recommended Training for Technicians with imageRUNNER ADVANCE C356iF III and C256iF III Certification

An optional online Hardware Update course is available that prepares technicians who are currently certified on the imageRUNNER ADVANCE C356iF III Series devices to setup and service the imageRUNNER ADVANCE DX C357/C257 Series devices.

Table 9 – Recommended Training for Technicians with imageRUNNER ADVANCE C356iF III/C256iF III Certification

Course Name[33]	Course Code[33]
imageRUNNER ADVANCE DX C357/C257 Series Online Hardware Update Training	19IRTADXC357U00O

33 Course names and course codes are subject to change without notice.

C. Certification

Technicians with a previous certification on the imageRUNNER ADVANCE C356iF III Series, are automatically certified on the imageRUNNER ADVANCE DX C357/C257 Series.

Certification includes the following devices:

- imageRUNNER ADVANCE DX C357iF
- imageRUNNER ADVANCE DX C257iF

D. Who Should Attend

It is recommended that any technician responsible for installing, servicing, or supporting the imageRUNNER ADVANCE DX C357/C257 Series machines, and who have been certified on the imageRUNNER ADVANCE C356iF III Series machines, successfully complete the imageRUNNER ADVANCE DX C357/C257 Series Online Hardware Update training course.

E. Course Format

The imageRUNNER ADVANCE DX C357/C257 Series Online Hardware Update course is self-paced, and takes approximately 60 minutes to complete.

F. Training Facilities

The online course is located in the e-Learning center on the Canon USA e-Support Center Website: http://www.support.cusa.canon.com. Certification maps on the e-Support Center Website provide easy access to the training. This online course can be conducted at any dealer facility that is suitable for online student learning.

G. Course Equipment

- imageRUNNER ADVANCE DX C357iF Series machine (recommended)
- Windows 7 or higher
- Google Chrome (recommended) or Microsoft Internet Explorer 8 or higher

H. Service Materials

The materials required for the imageRUNNER ADVANCE DX C357/C257 Series Online Hardware Update course are listed in the table below.

Table 10 – Service Materials

Model	Item	Location
imageRUNNER ADVANCE DX C357/C257 Series	Service Manual	Downloadable from the e-Support Center Website
	Parts Catalog	

I. uniFLOW Online Training

The uniFLOW Online eLearning course prepares technicians with the knowledge required for setting up and configuring uniFLOW Online in the field.

Note:

- Service technicians who have completed the uniFLOW Online training are entitled to live, phone-based support through the Canon USA TSC.
- uniFLOW Online training provides certification for uniFLOW Online and uniFLOW Online Express.

J. uniFLOW Online Express Training

The uniFLOW Online Express eLearning course prepares technicians with the knowledge required for setting up and configuring uniFLOW Online Express in the field.

Note:

- Service technicians, who have completed the uniFLOW Online or uniFLOW Online Express training, are entitled to live, phone-based support through the Canon USA TSC.
- uniFLOW Online Express training does not provide certification for uniFLOW Online.

K. Data Backup Service Training

The Data Backup Service eLearning course prepares technicians with the knowledge required for setting up and configuring the Data Backup Service in the field. Training is required, so that the servicing dealer can enroll in the Data Backup Service. Service technicians who complete the Data Backup Service training are entitled to live, phone-based support through the Canon USA TSC.

IX. Servicing Notes

A. Power and Plug Requirements

Canon USA strongly suggests dedicated and properly grounded outlets be provided for the imageRUNNER ADVANCE DX C357iF Series devices.

The imageRUNNER ADVANCE DX C357iF Series devices require a NEMA 5-15 receptacle for proper operation. Before installation, confirm that the proper dedicated NEMA receptacles are available for these devices.

Table 11 – Main Unit Power and Plug Requirements

imageRUNNER ADVANCE DX C357iF Series Main Unit	
	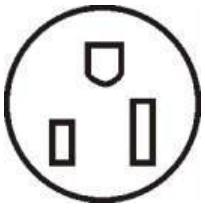 NEMA 5-15 Receptacle

Table 12 – Power Requirements for the Main Unit and Optional Accessories

Part or Accessory	Power Supply	Power Supply Cord/Plug Specifications	Length of Power Cord
Main Unit	1-120V/15 A outlet	NEMA 5-15	8.5’ (2.6 m)
Cassette Module-AE1	From the main unit	—	—
Cassette Feeding Unit-AJ1	From the main unit	—	—
Cassette Feeding Unit-AK1	From the main unit	—	—
Staple Finisher-Z1	From the main unit	—	—
Copy Card Reader-F1	From the main unit	—	—

IMPORTANT

- We recommend an additional standard 120V/15 A outlet for service tools, such as a laptop computer or vacuum that may be used when servicing or configuring the machine.
- Use only dedicated and properly grounded outlets for the main unit. It is also strongly suggested to use dedicated and properly grounded outlets for each optional accessory. Do not use extension cords. The ground connection serves to provide the internal electronics with a reference voltage. Faulty or poor ground sources will cause this reference voltage to fall into a range that no longer serves as a reliable reference voltage. The internal logic and programming of the imageRUNNER ADVANCE DX C357iF Series machines will not perform reliably because there is an insufficient difference between the internal operating signal voltages and the poor ground reference signal. A qualified electrician can measure and provide the ground source that the imageRUNNER ADVANCE DX C357iF Series machines or any computer controlled office equipment requires.
- Before installation, confirm that all necessary receptacles are available.

B. Installation Space Requirements

The imageRUNNER ADVANCE DX C357iF Series approximate installation space requirements may differ, depending on how the machine is configured and the optional accessories attached. Always ensure that there is enough space for the proper service and operation of the device.

IMPORTANT

- Make sure to keep the back and sides of the machine approximately 4” (100 mm) away from a wall for the proper servicing of the equipment.
- The floor must be level (with no bows) and flat for the stabilization and support of the machine.
- The minimum doorway opening that the machine passes through prior to installation must be at least 36” wide.

Table 13 – imageRUNNER ADVANCE DX C357iF/C257iF Installation Space Requirements

No Optional Equipment Is Attached

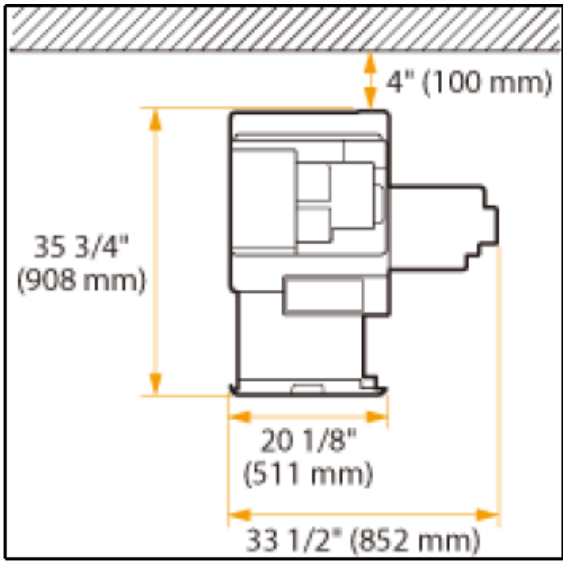

Table 13 – imageRUNNER ADVANCE DX C357iF/C257iF Installation Space Requirements Continued

The Staple Finisher-Z1 Is Attached

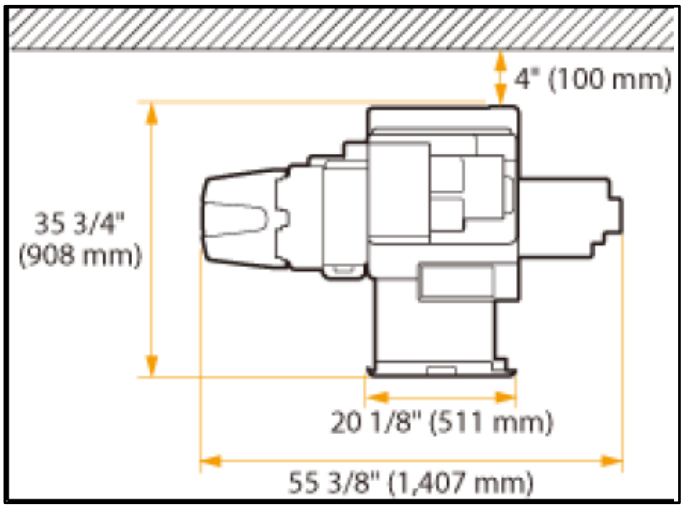

C. Estimated Installation Times

The table below indicates the estimated length of time needed to unpack and install the main unit and optional accessories, and calculated from the average amount of labor hours. The estimated installation times are based on one (1) experienced technician.

IMPORTANT

The installation of the main unit on the optional Cassette Feeding Unit-AJ1 or Cassette Feeding Unit-AK1 requires two (2) or more technicians.

Table 14 – Estimated Installation Times

Description		Estimated Time
imageRUNNER ADVANCE DX C357iF Series Main Unit		10 minutes
Cassette Feeding Unit-AJ1		6 minutes
Cassette Feeding Unit-AK1		7 minutes
Cassette Module-AE1		5 minutes
Staple Finisher-Z1		7 minutes
Copy Card Reader-F1 and Copy Card Reader Attachment Kit-B5		16 minutes
Super G3 FAX Board-AT1	With Cassette Feeding Unit	14 minutes
	Without Cassette Feeding Unit	13 minutes
Super G3 2nd Line FAX Board-AT1	With Cassette Feeding Unit	16 minutes
	Without Cassette Feeding Unit	15 minutes
IC Card Reader Box-D1	With Cassette Feeding Unit	16 minutes
	Without Cassette Feeding Unit	15 minutes
Copy Control Interface Kit-A1	With Cassette Feeding Unit	10 minutes
	Without Cassette Feeding Unit	9 minutes
NFC Kit-E1[17]		18 minutes
Connection Kit-A2 for Bluetooth LE		23 minutes

17 No longer available for purchase.

D. Serviceability

The imageRUNNER ADVANCE DX products are designed to improve serviceability, quality, and deliver lower service costs, which result in increased dealer service profitability.

Enhanced serviceability, as part of the overall design of the imageRUNNER ADVANCE DX products, enables a reduction in the time required to service the machine's major components. Access to common parts and frequently-used components has been improved to enable technicians to perform tasks more efficiently.

In addition, technology improvements and the FRU (Field Replaceable Unit) Program have reduced parts pricing, improved the cost per copy, and reduced the price of the fixing roller.

Finally, the use of Remote Support Services provides your dealership with remote meter reading and service monitoring capabilities using imageWARE Remote, as well as the ability to maintain up-to-date machine firmware downloads remotely and unobtrusively by using the CDS. All of these factors combined, helps to reduce the overall cost per copy, and enables competitive suggested maintenance pricing and favorable margins.

E. Remote Services

Remote support services consist of imageWARE Remote, the CDS (Content Delivery System), and the Remote Services Suite tools.

1. imageWARE Remote

imageWARE Remote is a service that collects page counter, service parts counter, and alarm, jam and error code data from Canon devices with the eRDS (Embedded Remote Diagnostic System) or the optional RDS (Remote Diagnostic System) Plug-in to the imageWARE Enterprise Management Console.

The eRDS enables a device to transmit counter and error code data to a UGW (Universal Gateway) database that the dealership can retrieve via a Web portal. imageWARE Remote provides the following benefits to customers:

- The ability to communicate meter counter information to the UGW database for review by your dealership.
- The ability to communicate device alarm, jam, and error alert notifications to the UGW database. The notification settings can be adjusted by your dealership within the UGW.
- The ability to schedule a firmware download via the CDS (Content Delivery System).

The RDS plug-in retrieves meter readings, select service alerts, and supplies usage data from up to 1,000 Canon printers, Canon multifunction devices, and third-party devices. These devices use the standard printer MIB (Management Information Base) to transmit the collected data directly to the UGW database. In addition, the plug-in can register devices to the UGW database.

The dealership can retrieve the meter reading and service alert data via a Web portal, or use an optional integrated application to communicate the data to your dealership's back-end device management system.

IMPORTANT

imageWARE Remote only supports TLS V1.2 and earlier.

The RDS plug-in offers the benefits described below:

- Retrieve meter readings for billing, which reduces the need for an on-site meter read or a phone call to the customer to read the meters.
- Anticipate part requirements by monitoring the imageRUNNER ADVANCE DX device meter readings. Monitoring the page counter and service part counter data, the service technician can anticipate when a part requires replacement, and have the part available during the next scheduled service visit.
- Investigate machine issues before visiting the customer site by monitoring service alerts. The notification settings can be adjusted by your dealership within the Web Portal or an integrated application.
- This enables the service technician to visit the customer with service alert information and necessary parts, thereby, reducing revisits by the service technician.
- Resolve simple issues over the phone, which reduces the need for an on-site service visit.
- Schedule firmware downloads to one or more imageRUNNER ADVANCE DX devices via the CDS (Content Delivery System), which reduces the need for an on-site firmware upgrade.

2. Content Delivery System

The CDS is Canon's next generation system for the delivery and installation of firmware and MEAP (Multifunction Embedded Application Platform) applications to imageRUNNER ADVANCE DX devices. The advantages of the CDS include reduced service costs (labor and travel), and improved first-call resolution. Another benefit is that the latest version of firmware is always available to download and install on the imageRUNNER ADVANCE DX devices.

The CDS provides users the option to download select MEAP applications (.jar files and license files), select client applications, and related manuals from the CDS Website (http://www.canon.com/fau/downloads). However, the value of using the CDS is realized when updating multiple imageRUNNER ADVANCE DX devices. You can save up to 40 minutes per machine for machine preparation, downloading applications, and installation.

IMPORTANT

Content Delivery System only supports TLS V1.2 and earlier.

There are three methods which helps you to deliver firmware updates and applications to imageRUNNER ADVANCE DX devices:

Table 15 – CDS Firmware Delivery Methods

Method		Download Firmware	Install Firmware	Frequency	Cost Savings
A	Scheduled Update (at device)	Automatic	Automatic	Recurs periodically	Full, automatic and unattended firmware updates after an initial one-time setup (fewer than 5 minutes).
B	Remote Update via UGW + CDS	Up to 13 hours to 7 days in advance	Automatic	One time as scheduled	Eliminates technician visits.
			Manual		Reduces the duration of a technician's visit.
C	On Demand Update (at device)	Up to 7 days in advance	Automatic	One time as scheduled	Full, automatic and unattended firmware updates after configuring (fewer than 5 minutes).
			Manual	One time on demand	Requires a technician visit every time the firmware must be updated.

a. Method A – On-Site Scheduled Update

The On-site Scheduled Update method ensures that the device always has the latest version of firmware installed. After a one-time setup by a service technician, the imageRUNNER ADVANCE DX machine automatically downloads and installs new firmware as it becomes available. No further technician visits are required to update firmware.

b. Method B – Remote Update

The Remote Update method enables the dealership to arrange a scheduled firmware download to the imageRUNNER ADVANCE DX from the UGW, or it provides the option for a service technician to visit the site and upgrade the most recent firmware at the machine.

c. Method C – On Demand Update

The On Demand Update method provides the service technician with access to the most recent version of firmware on demand at the device. The technician also has the ability to schedule firmware installs. A service technician must visit the site every time the firmware must be updated; however, the technician does not need to maintain a library of firmware versions.

Notes:

- To use the CDS on an imageRUNNER ADVANCE DX, the device must have access to the Internet. The service technician should perform a communications test from the Service Mode of the device to validate the device's ability to communicate to the CDS Distribution Server.
- When using the Remote Update method, the service technician must enable eRDS and the CDS UGW switch on all imageRUNNER ADVANCE DX devices. In addition, the devices must be registered on the UGW. For more information on registering devices on the UGW, see the documentation that came with imageWARE Remote.
- The CDS Instruction Manual includes conditions for use and acceptance of the CDS Service. It also contains language to help the customer understand the conditions for use and acceptance of the third-party software that is embedded in the hardware. (These conditions are also addressed in the Limited Warranty for Embedded Software.)
- The Content Delivery System Software Solutions Guide (available on Canon USA's Partner Portal and e-Support Websites), contains additional language that Canon USA recommends your dealership include in the Maintenance Agreement with your customers as it pertains to the use of the CDS service.

3. Remote Services Suite

The Remote Services Suite provides Web access to some of the more frequently-used UGW functions and status reports. The tools included in the suite are UGW SnapShot and Device Management Tools.

The Remote Services Suite tools provide:

- Mobile-friendly, simplified device status and information reports
- Simpler device registration, that includes bulk registration of multiple machines in one upload operation
- Ability to share credentials between e-Support and UGW

a. UGW SnapShot

SnapShot is a Web application for use on desktop PCs and mobile devices. SnapShot provides the ability to query device information from the imageWARE Remote UGW.

SnapShot is designed to perform the following functions:

- Display detailed device information, including counters, consumable statuses, firmware version, and events.
- Display summary screens of devices that are assigned to a specific customer.

b. Device Management Tools

The Device Management Tool is a Web application that replaces the Device Upload Tool for registering, managing, and unregistering devices in the UGW.

The Device Management Tool is designed to perform the following functions:

- Create customer profiles and contract information
- Register devices to a customer, either individually or in quantity
- Unregister devices from a customer, either individually or in quantity

c. Dealer Dashboard

The Dealer Dashboard displays key device and user activity for the Remote Services tools. The information helps Canon USA Service Partners monitor the devices in a fleet (including total registered devices, actively reporting devices, not reporting devices, and devices without a COM TEST) and the user status (including active and inactive users, and remote services tool activity). The Dealer Dashboard includes an option to send regular reports via e-mail to specified users. For more information, refer to the Remote Services page on the Canon USA's e-Support Center Website.

F. Device Configuration Management

There are two tools to help a System Administrator manage device configuration settings from device to device, and they are standard tools on the imageRUNNER ADVANCE DX C357iF Series: DCM (Device Configuration Manager) and Device Migration Navigator.

1. DCM (Device Configuration Manager)

The DCM reduces the installation time for a new or replacement imageRUNNER ADVANCE DX device by exporting the user modes and service modes from the current device, and then importing them to a new or replacement device.

The settings can be imported and exported from the current device via the Remote UI or the Device Information Delivery Settings function, or via the Service Mode to USB memory media. For more information on the DCM, see the *imageRUNNER ADVANCE DX C357iF Series Service Manual*.

2. Device Migration Navigator

The Device Migration Navigator is an application that helps the service technician select the best migration tool (Remote UI or USB memory media) to transfer device settings based on the source device, destination device, and the settings that need to be transferred.

The Device Migration Navigator delivers a printable report that shows the service technician the tools to use, the migration procedure, and the migration limitations. It is also available at no charge from Canon USA's e-Support Website Download Center.

Note: The Device Migration Navigator is only used to transfer device settings. It is not used to back up or restore RAM data.

G. LMS (License Management System)

To activate optional software programs, you must obtain a license through the LMS server. This replaces the need for additional hardware or dongles to activate new software.

The LMS is a server-based software license program. All purchased software application packages contain a license access number certificate with the documentation. The dealer must enter the license access number and the imageRUNNER ADVANCE DX device's serial number into the LMS server to generate a license key. The URL to access the LMS server is: http://www.canon.com/lms/ir/.

Figure 1 – License Management System

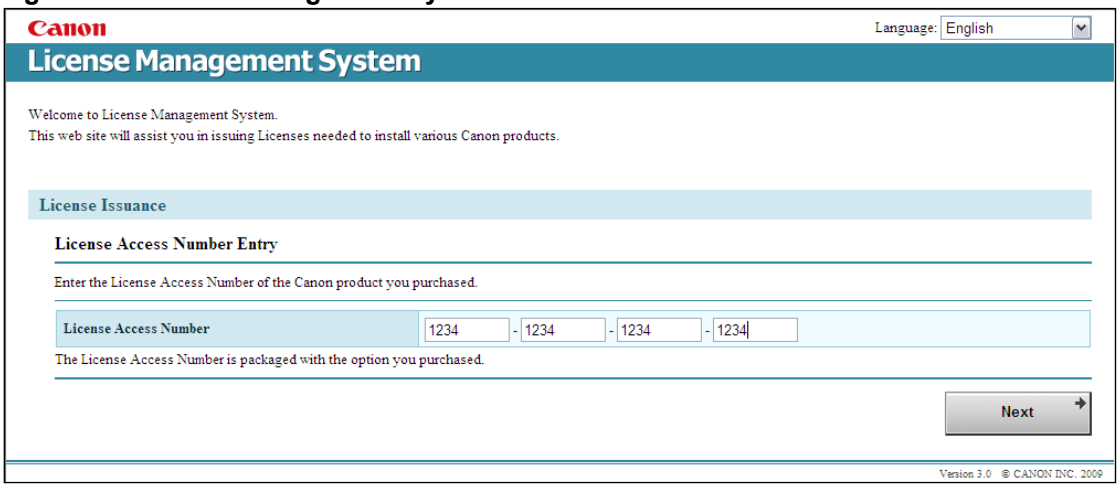

If there are activation or installation issues, contact the Technical Support Center. Be prepared to provide the product's serial number, license access number, and license key.

Notes:

- The license access number comes with the software. Keep the license access number in a secure location, as it cannot be replaced if it is lost.
- The machine's serial number can be found on the Counter Check screen on the machine's UI.
- Activated software programs are not impacted by normal service activity.

H. Content Delivery System Website

The CDS Website enables end-users to download, install, and activate select MEAP applications (.jar and license files) via the imageRUNNER ADVANCE DX device directly, without the need to go through the LMS and Service Management Service.

To manage licenses, register, and install MEAP applications, you can access the CDS directly from the imageRUNNER ADVANCE DX device's touch panel display, enter the LAN (License Access Number) of the MEAP application when prompted, and then follow the instructions on the touch panel display to install and register the MEAP application.

Some MEAP applications include a Software License Agreement to which you must agree before you can complete the installation and registration process.

Additionally, you can download select client applications and related manuals from the CDS Website located at: http://www.canon.com/fau/downloads.

Figure 2 – Content Delivery System Website

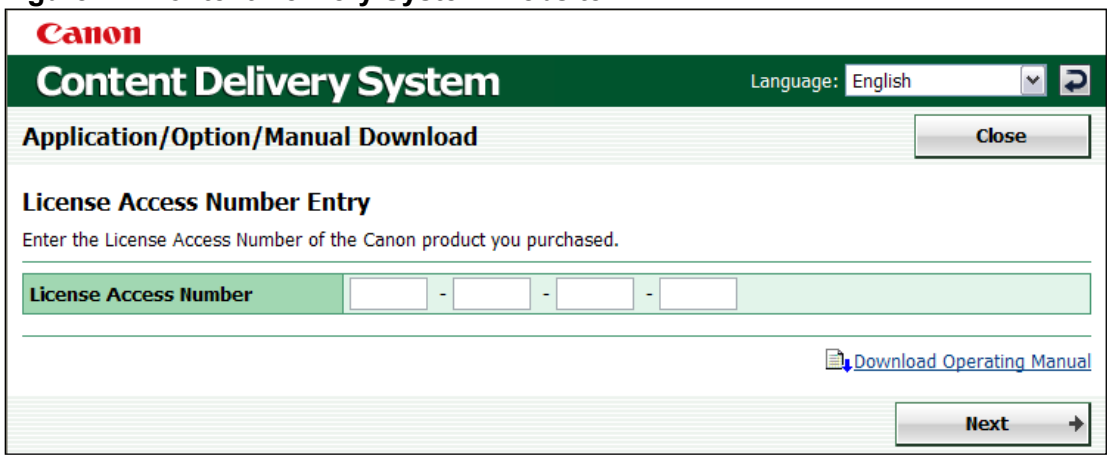

If there are activation or installation problems, contact the Technical Support Center, and provide the product's serial number and LAN.

I. Recommended System Engineer Requirements

An SE (System Engineer)[34] is recommended to work with Canon's software solutions and networked devices, and should have the following basic job functions:

- Systems integration (pre-sales, Professional Services, and post-sales)
- Installation
- Education of customers and dealership personnel
- Troubleshooting

To perform the above tasks successfully, it is crucial that the SE have strong Software solutions. IT infrastructure and working knowledge in:

1. The major computer platforms (PC- and Mac-based)
2. Computer hardware (including cabling)
3. Computer software (including drivers (PCL, PS, UFRII))
4. Operating systems:
   - Windows 7, 8, 10
   - Mac OS
   - Linux
   - VMware virtualization
5. Server Operating Systems:
   - Windows 2008, 2012
   - Mac OS X Server
6. Protocols:
   - TCP/IP
   - SSL
   - Active Directory
7. Printing (drivers, processors, spoolers, and queues)
8. Scanning

It is also important that the SE have computer skills and working knowledge in:

- Other computer platforms (mainframe and UNIX)
- Remote Support Tools

The Education/Training of a successful Canon dealership's SE include:

1. CompTIA A+, CompTIA Network+, and MCP (Microsoft Certified Professional)
2. Two years of experience as a computer technician, Network Administrator, or related software support position
3. A degree in Computer Science or Networking Technology, and two years of experience in the above areas

34 An SE (System Engineer) is a professional title often used by hardware vendors for individuals who perform systems related tasks, such as analysis, design, and programming. System Engineers are also often involved in pre-sales activities.

J. Firmware Upgrades Using the Service Support Tool

The SST (Service Support Tool) (version 4.81 or later) is available via Canon's e-Support Center Website (http://www.support.cusa.canon.com) for upgrading the following system components:

- System Software stored on the HDD
- Main engine firmware
- Accessory firmware (Refer to the SST User Manual for a list of supported devices and accessories.)
- MEAP Contents
- Language
- HDD Format
- Clear the service mode password
- Initialize the HDD Encryption Board
- Temporary backup and restore the Flash PCB (Printed Circuit Board) and SRAM settings on the Main Controller PCB 2.
- Initialize the standard area on the Flash PCB

The imageRUNNER ADVANCE DX C357iF Series devices support firmware downloads from the SST and a USB memory stick. When the hard disk drive is replaced, the SST is used to format the new HDD and load software.

IMPORTANT

- The imageRUNNER ADVANCE Security Kit-AQ1 for IEEE 2600.1 Common Criteria Certification ships with certified device firmware to enable the imageRUNNER ADVANCE DX C357iF Series machines to be IEEE 2600.1 certified.
- Once the imageRUNNER ADVANCE Security Kit-AQ1 for IEEE 2600.1 Common Criteria Certification is installed, you can only upgrade imageRUNNER ADVANCE DX C357iF Series machines with firmware versions certified for the IEEE standard 2600.1-2009. Upgrading to non-certified firmware invalidates the IEEE standard 2600.1 certification, although the machine will continue to operate properly.

K. Hard Disk Drive Handling

The imageRUNNER ADVANCE DX C357iF Series machines use an HDD (Hard Disk Drive) for storing firmware and image data. The HDD is easily affected by shock, vibration, and static charge. Therefore, its handling requires special care. When transporting an HDD, which is available as a service part, it must be kept in its original package until it is installed in a machine.

⚠ CAUTION

Canon USA or any of its affiliates or dealers are not liable for any damages for loss of data received or stored on the hard disk, including loss arising from lost opportunity to use such data, even if Canon is informed of the possibility of such damages. Therefore, it is recommended not to permanently store data on the HDD without having secured copies or printouts of such data. (Review the terms of the product's Limited Warranty for more details.)

IMPORTANT

If an HDD must be replaced due to a fault, all MEAP application files stored on it will be lost, requiring all applications and their license files to be reinstalled, as well as the HDD. Refer to the *imageRUNNER ADVANCE DX C357iF Series Service Manual* for further details.

L. Special Tools, Solvents and Oils

In addition to the standard tools used to service these devices, a service technician should also carry special tools to maintain the machine, and carry specific solvents and oils for the cleaning and lubrication of key components of the machine.

For more information on the special tools, solvents, and oils, see the *imageRUNNER ADVANCE DX C357iF Series Service Manual*.

M. Consumables

Consumables are all products and materials that are consumed with regular use and cannot be reused. Such consumables include but are not limited to paper, chemicals, and toner.

A number of factors are considered to determine the approximate yield expectancy of a consumable item, including paper size and the amount of coverage per page.

Note: All consumables shown in the table below are estimates for reference purposes only, and are subject to change without notice.

Table 16 – Main Unit Consumables List

<table>
<tr><th rowspan="2">Description</th><th rowspan="2">Part Number[2]</th><th rowspan="2">Quantity</th><th colspan="2">Estimated Life (Pages)[35]</th><th colspan="2">Remarks</th></tr>
<tr><th>C357iF</th><th>C257iF</th><th>C357iF</th><th>C257iF</th></tr>
<tr><td>GPR-58 Black Drum Unit[36]</td><td>2186C003AA</td><td>1</td><td>Approx. 48,200</td><td>Approx. 47,300</td><td rowspan="4">Based on an AMCV (Average Monthly Copy Volume) of 3,000, and 35% Color Ratio.</td><td rowspan="4">Based on an AMCV of 2,000, and 35% Color Ratio.</td></tr>
<tr><td>GPR-58 Cyan Drum Unit[36]</td><td>2187C003AA</td><td>1</td><td rowspan="3">Approx. 45,500</td><td rowspan="3">Approx. 44,400</td></tr>
<tr><td>GPR-58 Magenta Drum Unit[36]</td><td>2188C003AA</td><td>1</td></tr>
<tr><td>GPR-58 Yellow Drum Unit[36]</td><td>2189C003AA</td><td>1</td></tr>
<tr><td>GPR-58 Black Toner</td><td>2182C003AA</td><td>1</td><td colspan="2">Approximately 23,000</td><td colspan="2" rowspan="4">Based on 5% Toner Coverage and 100% Color Ratio.</td></tr>
<tr><td>GPR-58 Cyan Toner</td><td>2183C003AA</td><td>1</td><td colspan="2" rowspan="3">Approximately 18,000</td></tr>
<tr><td>GPR-58 Magenta Toner</td><td>2184C003AA</td><td>1</td></tr>
<tr><td>GPR-58 Yellow Toner</td><td>2185C003AA</td><td>1</td></tr>
</table>

2 Part numbers are subject to change without notice.

35 Value is based on LTR paper. Estimated average values in the field are based on data from the supplier. Data is subject to change, depending on many factors, including, without limitation, the monthly copy volume, job length, color ratio, environment, type of image printed, and how the customer handles the equipment.

36 The drum units are replaceable by the customer, if the dealer chooses to allow it.

Notes:

- Make sure to store toner bottles horizontally with the proper side facing up.

- Before you use toner, hold each toner bottle vertically with the white portion on top, and then shake the toner bottle up and down approximately 10 times.

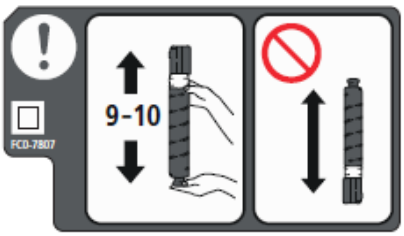

N. Consumable Parts

Consumable parts are defined as those parts having a limited life that will be reached during a customer's specific machine operation, and should then be replaced as needed. Examples of consumable parts include, but are not limited to, feed rollers and cleaner blades.

An estimated consumable parts list is provided in the table below to assist in the initial parts/supplies planning. A consumable part's life expectancy is directly related to usage factors, such as paper size, paper quality, environment, usage application, and machine maintenance. Therefore, consumable parts do not have a warranty, and Canon USA cannot guarantee a minimum life.

Note: All consumable parts shown in the table below are for reference purposes only, and are subject to change without notice.

Table 17 – Main Unit Consumable Parts List

Description	Part Number[2]	Quantity	Estimated Life[35]	Remarks
Waste Toner Container	FM0-0015-000	1	30,000 pages	• 5% coverage at a color ratio of 30%. • Customer replaceable, if dealer chooses to allow.
ADF Pickup Unit	FM1-W677-000	1	50,000 sheets	• Customer replaceable, if dealer chooses to allow. • Customer Replaceable Set (ADF Maintenance Kit) Part Number: FM2-B058-000
ADF Separation Roller Unit	FM1-W655-000	1	50,000 sheets	
Secondary Transfer Outer Roller	FM1-U036-000	1	150,000 pages	Customer replaceable, if dealer chooses to allow.
Fixing Assembly (120V)	FM1-R726-000	1	150,000 pages	
ITB Unit	FM1-A153-000	1	150,000 pages	

2 Part numbers are subject to change without notice.
35 Value is based on LTR paper. Estimated average values in the field are based on data from the supplier. Data is subject to change, depending on many factors, including, without limitation, monthly copy volume, job length, color ratio, environment, type of image printed, and how the customer handles the equipment.

O. Periodically Replaced Parts

The imageRUNNER ADVANCE DX C357iF Series does not have any periodically replaced parts.

P. Counters

This section describes the soft counters, MEAP counters, and toner bottle counters.

1. Soft Counters

The imageRUNNER ADVANCE DX C357iF Series machines use soft counters to track their functional copy use. The control panel displays up to eight counters on the Counter Status Check screen (when the Counter Check key on the control panel is pressed). By default, the imageRUNNER ADVANCE DX C357iF Series machines display 4 out of 8 counters on the Counter Status Check screen.

The table below indicates the default counter configurations of the imageRUNNER ADVANCE DX C357iF Series machines displayed on the Counter Status Check screen. For more information on the soft counter configurations, see the *imageRUNNER ADVANCE DX C357iF Series Service Manual*. Specifically, refer to the Service Mode section of the Service Manual that covers the setting under COPIER > OPTION > USER.

Table 18 – Soft Counter Configuration

Counter	Description	Default Display	Default Switch
1	101: Total 1	On	Fixed
2	108: Total (Black 1)	On	Can be changed via the Service Mode setting to any available counter.
3	230: Copy (Full Color + Single Color/Small[37])	On	
4	322: Print (Full Color + Single Color/Small[37])	On	
5	Not displayed	Off	
6	Not displayed	Off	
7	Not displayed	Off	
8	Not displayed	Off	

The displayed counters can be changed, enabled, or disabled in the Service Mode, except for Counter 1. Counter 1 cannot be changed under any circumstances.

Since the imageRUNNER ADVANCE DX C357iF Series does not support 11” x 17” paper, you cannot use a double-click charge scheme.

37 Refers to small size paper (when the paper length is 14” (364 mm) or shorter in the paper feed direction).

2. MEAP Counter

The MEAP application counter counts the number of prints and scans made per MEAP application. You can view the MEAP counter by logging on to the MEAP SMS (Service Management Service) Application/License Information page via a Web browser. (The computer you are using must be connected to the machine and network.) You can also view the MEAP counter from the MEAP device. Press the Counter Check button on the device's control panel, and then press the MEAP Counter key on the touch panel display.

There are three types of MEAP applications:

- Applet: Contains a user interface on the touch panel display of the device. Up to nine applet tabs can be displayed on the touch panel display of the device.
- Servlet: Contains a remote, programmable user interface for the application via a Web browser.
- Esplet: The application does not contain a user interface.

Each MEAP application has its own counter. There are 20 counters available for MEAP applications on the imageRUNNER ADVANCE DX C357iF Series machines. However, one of these 20 counters is used for Universal Send.

3. Toner Bottle Counters

The imageRUNNER ADVANCE DX C357iF Series machines have a Toner Bottle Counter that increases after the machines recognize that a new toner bottle has been inserted. Also, these machines include a Video Count Frequency Distribution Counter that determines a customer's image duty trend. These counters are installed to provide support for billing customers who order and consume a lot of toner. Toner units shipped can be compared against toner bottles actually installed in the machine.

Table 19 — Toner Bottle Counters

	Toner Bottle Counter[38]
Counter Number	Black: 0071 Yellow: 0072 Magenta: 0073 Cyan: 0074
Description	Counts how many toner bottles are consumed throughout the life of the machine.
Service Mode	COPIER > OPTION > USER > TNRB-SW (Level 2)
Display on the Counter Check Screen	0: Not displayed 1: Displays number of new toner installations 2: Not displayed 3: Displays number of new toner installations + number of unidentified toner installations 4: Displays number of premature toner installations + number of new toner installations + number of unidentified toner installations
Remarks	Backed up three times

38 The counter is not advanced under these conditions after replacing the DC Controller PCB:
- The DC Controller was replaced when the power was OFF, and a new toner bottle was installed before the power was turned ON.
- The DC Controller was replaced when the power was OFF, the power was turned back ON, and then a new toner bottle was installed (old bottle was already removed or the front door was open).

Q. Less Maintenance for Service Cost and Downtime Reduction

The imageRUNNER ADVANCE DX C357iF Series machines are designed for the ease of installation and parts replacement, which in turn reduces dealer labor costs. Serviceability improves because these machines are equipped with the potential to reduce service operation costs for the dealer (lets the dealer focus on more important repair visits) and maintain uptime for the customer (by enabling a nontechnical person (end-user) to perform installation and replace parts). This includes trained delivery people, the person responsible for daily maintenance at the customer site, and end-users.

Canon USA suggests the following tasks as possible options designed to enable dealerships to reduce service costs and maintain uptime for the customer:

- Device installation by trained delivery people or the person responsible for daily maintenance
- Select parts replacement by an end-user
- Remote support (technical support over the telephone)
- Perform operations on the machine's UI remotely with the standard Remote Operator's Kit.

The imageRUNNER ADVANCE DX C357iF Series machines provide dealers with more options for reduced installation times and parts replacement. The Less Maintenance strategy is solely at the discretion of the dealer, however, Canon USA encourages dealers to use this strategy as an opportunity to reduce service costs and maintain uptime for their customers.

By using the less maintenance option, dealerships do not have to reduce click charges, and it increases a dealership's efficiency, as outlined below.

1. Installation/Parts Replacement by Nontechnical Staff Option

The table below details potential machine installation and parts replacement scenarios categorized by the customer type. We encourage dealers to consider other scenarios that may not be listed below, based on experience with your customers. For example, ask users to perform UI tasks on the machine remotely with the standard Remote Operator's Kit.

Table 20 - Installation and Parts Replacement Scenarios

Customer Type	Installation of the Device	Parts Replacement
MDS/Fleet	Installation depends on the size of the business, and may be a challenge for large-scale businesses. The IT staff typically manages the assets, so there may not be an opportunity for the IT staff to perform the device installation. However, for a mid/small size business, IT staff or trained delivery people may be able to perform the device installation.	Parts replacement depends on the size of the business. It may be a challenge, because many large-scale businesses do not allow end-users to replace parts. However, for a mid/small size business, the IT staff can replace parts.
Facility Management	Installation may be a challenge because this product is too heavy to lift by a single Facility Management person. Trained delivery people should be able to perform the device installation.	The Facility Management staff can replace consumable parts.
Educational Institution	Installation may be a challenge because this product is too heavy to lift by a single staff person. Trained delivery people should be able to perform the device installation.	Parts replacement can be performed if the customer has a person who is responsible for daily maintenance in their environment.
Remote Customer	Installation may be a challenge because this product is too heavy to lift by a single staff person. Trained delivery people should be able to perform the device installation.	Remote customers can replace consumable parts, and it is faster than waiting for a technician to arrive on-site.

a. Potential Scenarios

i. Installation

It may be difficult to designate end-users to install this machine. The imageRUNNER ADVANCE DX C357iF Series weighs approximately 108 lb (49 kg); however, each machine is designed to help end-users complete installation. The machine comes standard with a “Setup Guide” on the machine’s UI, which helps the user configure and set up the machine settings. See Figure 3 – Setup Guide.

Also, this machine ships with drums that are pre-installed at the factory. This eliminates concerns that the end-user may damage the drums during installation.

The table below describes the products and major accessories that can be installed by an end-user or trained delivery person, and where to find installation information.

Table 21 – Less Maintenance Items, Personnel Who Can Install, and Where to Find Installation Information

Item Name	Target Installation Person	Installation Guide
Main Unit	End-User	Starter Guide (in box)
Cassette Feeding Module-AE1	End-User	Booklet (in box)
Cassette Feeding Unit-AK1	End-User	Booklet (in box)
Cassette Feeding Unit-AJ1	End-User	Booklet (in box)
Staple Finisher-Z1	Trained Delivery Person/Technician	Booklet (in box)

The “Setup Guide” on the machine’s UI helps end-users and delivery people navigate to and specify the necessary settings for installation.

Figure 3 – Setup Guide

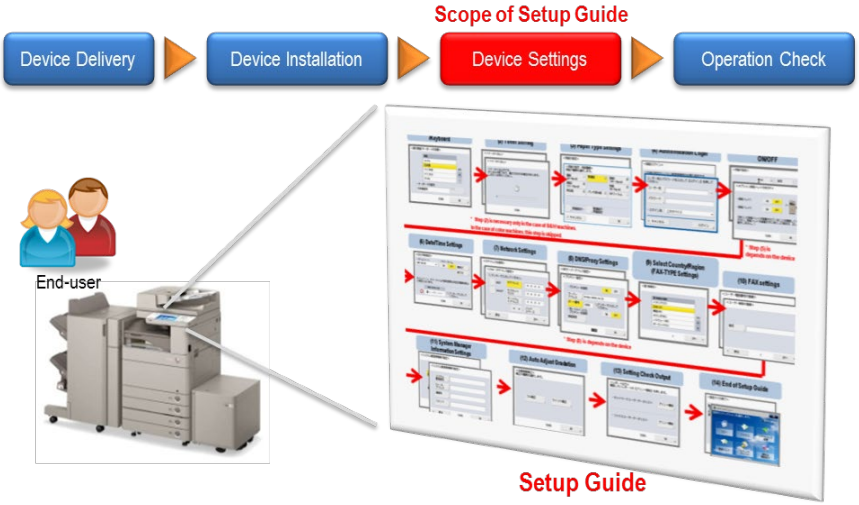

The “Setup Guide” can help the end-user specify the settings described in the table below.

Table 22 – Setup Guide Settings

Settings Screen	Remarks
Switch Language/Keyboard Layout	
Toner Stirring	Automatic (Do not have to specify)
Paper Settings	Set the paper type, custom size, envelopes, and unrecognized standard size.
Use User Authentication	Default: ‘On’ User Authentication If this step is skipped, the Setup Guide proceeds to Auto Adjust Gradation.
Date/Time Settings	
Network Settings	IP Address, Subnet, and Gateway
DNS/Proxy Settings	
Select Country/Region	
Register Unit	Telephone #, Unit Name, Line Type
Auto Adjust Gradation	
Output Report	
End of Setup Guide	

ii. Parts Replacement

The following parts replacement scenarios are examples:

Scenario 1: Periodical parts replacement is based on a warning message.

Scenario 2: Provide a phone-fix, identify parts to be replaced over the phone, the parts are sent, and the customer replaces them.

Scenario 3: A technician visits the customer site without replacement parts, the customer is instructed to note the replacement parts that are needed, the dealer ships out the parts, and the customer performs the replacement upon receipt.

Table 23 – Parts Replacement Scenarios

Customer Replaceable Items	Scenario 1	Scenario 2	Scenario 3
Drum	✓	✓	✓
Waste Toner Container	✓		
Fixing Assembly		✓	✓
ADF Pickup Roller/ Separation Pad		✓	✓

(a) Scenario 1: Periodical Parts Replacement Based on a Warning Message

This product generates a warning message to tell the customer to replace the parts at a certain time. In this case, the customer may want to have a parts stock prior to the message. If the device is connected to the UGW (Universal Gateway), the device sends the pre-notification alarm to the UGW before the parts replacement message is displayed on the device's UI. This alarm enables the dealership to ship the parts to the customer before the message is displayed.

This device also generates a replacement completion alarm to the UGW after the drums and waste toner container are replaced. This signal tells the dealership that the part they shipped to the customer was replaced. See Figure 5 – Drum Protective Cover.

Additionally, new drum units come with plastic orange covers, which protect the drum surface from scratches or damage that may occur when the customer replaces them.

Figure 4 – Less Maintenance - Parts Replacement Based on Warning Message Scenario

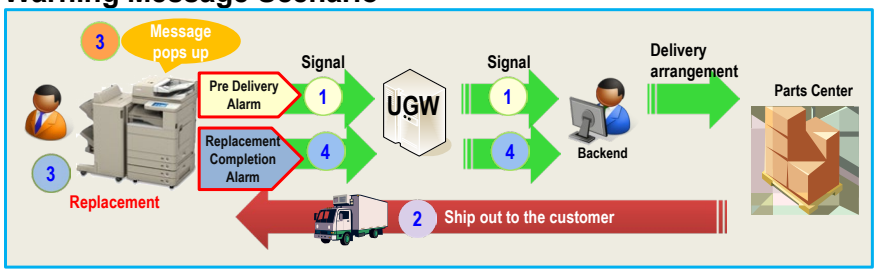

Figure 5 – Drum Protective Cover

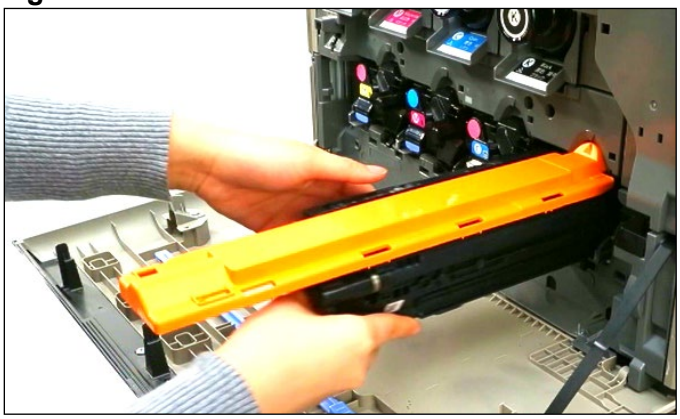

The table below explains the timing of drums and waste toner container replacement, if a warning message is displayed, how to reset the parts counter, whether instruction is available for parts replacement, and whether a UGW completion alarm is supported. These notifications enable dealers to consider parts delivery timing.

Table 24 – Less Maintenance - Timing of Drums and Waste Toner Container Replacement Scenario 1 (Pre-Notificatlon)

Items	Pre- Notification		
	Pre-Delivery Alarm to UGW	Timing Setting for the Alarm	Pre-Notice on LCD Panel
		Service Mode > COPIER > OPTION	
Drum	Supported	FNC-SW > D-DLV-BK/CL (50-200%)	N/A
Waste Toner Container	Supported	N/A	Default : ON Changeable with DSPLY-SW > WT-WARN

Table 25 – Less Maintenance - Timing of Drums and Waste Toner Container Replacement Scenario 1 (Replacement)

Items	Replacement Message on LCD Panel	Timing Setting for the Message	Instruction
	Service Mode > COPIER > OPTION		
Drum	DefaultOFF Changeable with USER > P-CRG-LF	Fixed (7days later from pre-delivery alarm)	Animation Printed on the box
Waste Toner Container	Displayed	Fixed (After certain output was made from pre-notification)	Animation Printed on the box

Table 26 – Less Maintenance - Timing of Drums and Waste Toner Container Replacement Scenario 1 (Completion)

Items	Completion			
	Counter Reset	Counter Reset Screen Default	Change the Default	Replacement Completion Alarm to UGW
Drum	Automatic	N/A	N/A	Supported
Waste Toner Container	Automatic	N/A	N/A	N/A (Instead, Stop alarm is generated once Full level is detected)

(b) Scenario 2: Provide a Phone-Fix, Identify Parts to be Replaced over the Phone, the Parts Are Sent, and the Customer Replaces Them

Although the device does not generate a message that tells the customer to replace the Fixing Assembly and the ADF Pickup Roller/Separation Pad, it is recommended that dealerships identify when these parts should be replaced via a telephone conversation with their customer, ship the parts to the customer, and then have the customer replace the parts. Instructions come inside the parts box, and once the customer completes the installation, the parts counter should be reset manually so that dealers receive the replacement completion alarm via the UGW.

Figure 6 – Less Maintenance - Parts Replacement via Telephone Scenario

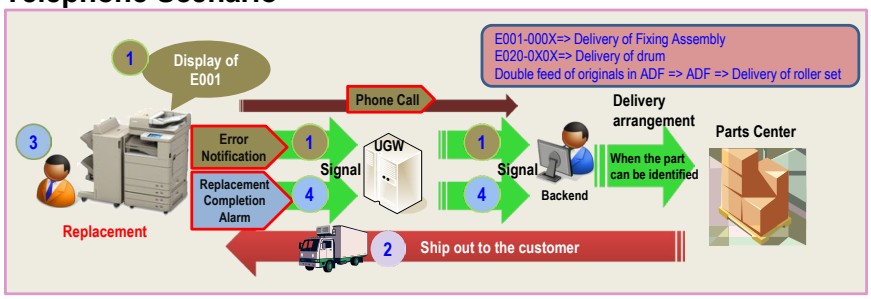

Table 27 – Less Maintenance - Target Parts for Replacement Scenario 2

Items	Replacement	Completion			
	Instruction	Counter Reset	Counter Reset Screen Default	Change the Default	Replacement Completion Alarm to UGW
Drum	Printed on the box	Automatic	N/A	N/A	Supported
Fixing Assembly	Sheet in the box	User mode > Settings/Registration	Displayed	COPIER > OPTION > DSPLY-SW > FXU-DSP	Supported
ADF Pickup Roller/Separation Pad	Sheet in the box	User mode > Settings/Registration	Displayed	COPIER > OPTION > DSPLY-SW > DF-DSP	Supported

(c) Scenario 3: A Technician Visits the Customer Site without Replacement Parts, the Customer Notes the Replacement Parts That Are Needed, the Dealer Ships Out the Parts, and the Customer Performs the Replacement upon Receipt.

This scenario may reduce the number of revisits by a technician. If a technician can identify the parts that must be replaced to solve the issue during the service visit, and the necessary parts are not on hand, the customer may be instructed to note the replacement parts that are needed. The dealer can ship out the parts later that day, and have the customer perform the replacement upon receipt.

Figure 7 – Less Maintenance - Parts Replacement via Customer When a Technician Does Not Have the Necessary Parts Scenario

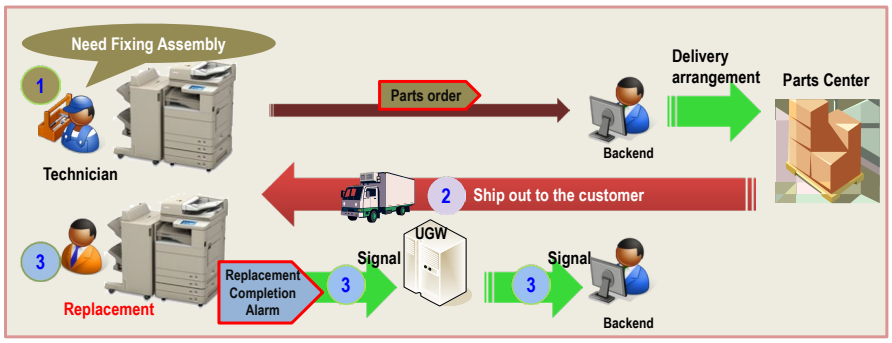

Table 28 – Less Maintenance - Target Parts for Replacement Scenario 3

Items	Replacement	Completion			
	Instruction	Counter Reset	Counter Reset Screen Default	Change the Default	Replacement Completion Alarm to UGW
Drum	Printed on the box	Automatic	N/A	N/A	Supported
Fixing Assembly	Sheet in the box	User mode > Settings/ Registration	Displayed	COPIER > OPTION > DSPLY-SW > FXU-DSP	Supported
ADF Pickup Roller/Separation Pad	Sheet in the box	User mode > Settings /Registration	Displayed	COPIER > OPTION > DSPLY-SW > DF-DSP	Supported

b. Considerations

Dealerships may need to consider the following when the customer is permitted to install/service the machine:

- The customer should dispose of the machine's box/carton and replaced parts.
- The dealer should dispose of the machine's box/carton and replaced parts as part of a regular process.
- Establish a direct parts delivery system to the customer (for example, UPS (United Parcel Service)).

2. Remote Support

As part of the Less Maintenance strategy, Canon USA encourages dealers to consider technical support for customers over the telephone. Remote support enables the dealer to resolve problems over the telephone and avoid a technician visit. This makes the dealer more efficient, enables them to save on service costs, spend time on more difficult issues, and enables the customer to enjoy more uptime.

Some ideas to start using remote support for your customers are below.

- Provide technical and network problem resolution to end-users (customers) by performing a question diagnosis, while guiding users through systematic solutions. Solutions include, but are not limited to, resolving user name and password issues, uninstalling/reinstalling basic software applications, verifying proper hardware and software set up, power cycling equipment, assisting with navigating around application menus, touch panel display menus, and troubleshooting e-mail issues.
- Identify, correct, and advise on operational issues.
- Provide customer support and technical issue resolutions via e-mail, telephone, or other electronic medium.
- Help configure a customer's equipment to connect to the Internet or network.
- Configure MEAP applications to connect to Active Directory servers or other services.
- Redirect issues that cannot be resolved over the telephone to an appropriate resource, and schedule a technician visit.
- Accurately process and record call transactions using a computer designed tracking software.
- Follow up and call back customers when necessary.
- Stay current with system information changes and firmware updates.

Furthermore, the imageRUNNER ADVANCE DX C357iF Series machines are standard-equipped with the Remote Operator's Software Kit. This enables dealers to operate the User mode and Service mode of the machine via a customer's PC. Before using the Remote Operator function, dealers must turn the Remote Operator's settings 'On' by pressing [Settings/Registration] > [Management Settings] > [License/Other] > [Remote Operation Settings], and download and install the Viewer application, which is available on the e-Support Website on the customer's PC.

Figure 8 – Remote Support with the Standard Remote Operator's Software Kit

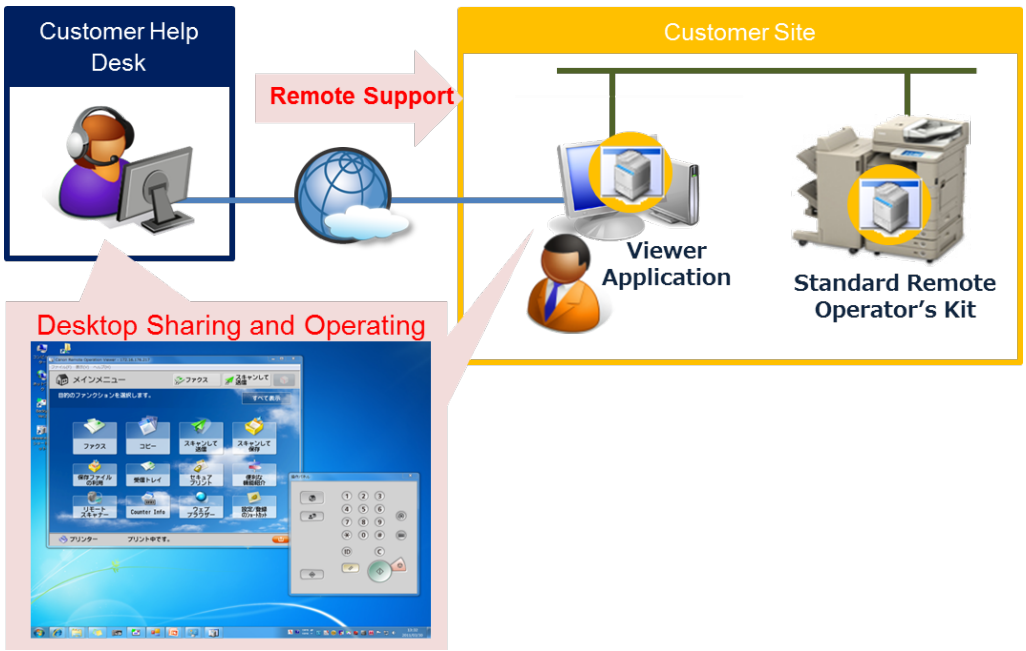

X. Limited Warranty Support

A. End-User Limited Warranty Conditions

Ninety (90) days after delivery to the original purchaser or 30,000 prints/copies, or a combination of both, whichever comes first.

This limited warranty covers the compatible Canon brand product accessories. For detailed warranty information, please refer to the Canon imageRUNNER ADVANCE DX C357iF Series Limited Warranty located in the Appendix.

Note: There is no warranty on any consumable items or consumable parts, such as paper, toner, chemicals, or pick-up rollers.

B. GPR-58 Drum Unit Limited Warranty

Full Credit	**Black:** **Color:**	30 days from the date of the original purchase, or 1,000 prints or copies (or a combination of both), whichever comes first.
Prorated Credit	**Black:**	120 days from the date of the original purchase, or 38,560 prints or copies (or a combination of both), whichever comes first.
	Color:	120 days from the date of the original purchase, or 36,400 prints or copies (or a combination of both), whichever comes first.

C. Warranty Programs

Please refer to the "Warranty Programs" section on the e-Support Center Website to review the details of the warranty programs and offerings described in this section.

1. Flat-Rate Program

The Flat-Rate Program provides a flat-rate credit to Canon USA's full-line dealers as compensation for warranty expenses that they may incur.

2. Warranty Parts for Repair

The APRFs (Authorized Parts Repair Facilities) are authorized by Canon USA to repair circuit boards for various Canon products. The APRF program is designed to help your dealership reduce service costs by having circuit boards repaired instead of purchasing brand new boards.

3. e-Tag

e-Tag is an electronic, limited-warranty claim form that is completed online, printed out, and accompanied by the original defective part or defective drum that is being returned to the Warranty Control Section for warranty compensation.

4. Parts Support Program

The Parts Support Program is designed to help reduce the service costs for controllers. By participating in the Parts Support Program, your dealership is not required to stock expensive parts.

XI. Product Technical Support Offerings

Please refer to the "Technical Support Center" section on the e-Support Center Website for the most current policies and procedures.

A. Canon USA Technical Support Center

The TSC (Technical Support Center) is the single-point of entry for all technical support issues on BICG (Business Information Communications Group) products. To ensure that every dealer receives the highest level of support and help to resolve the end user's problems quickly and accurately, we recommend each service technician become familiar with the dealer support requirements and Canon USA support offerings.

Please refer to the "Tech Support" tab on the e-Support Center Website to review the TSC's policies and procedures, as well as, contacts and tickets.

B. Technical Support Escalation

The TSC, at its discretion, escalates a case to the Regional Field Support staff or Engineering group after all reasonable troubleshooting options have been exhausted. For hardware-related issues a DES (Designated Escalation Specialist) for the imageRUNNER ADVANCE DX Series is required to escalate issues to Field Support Staff. The DES must have worked on the problem directly before the TSC can escalate the issue to Field Support staff. See the Canon USA Support Escalation Flow Chart in Figure 9 – Canon USA Support Escalation Flow Chart

Note: For support escalation to the Field Support staff, a DES[39] must contact the TSC and visit the site at least once.

Figure 9 – Canon USA Support Escalation Flow Chart

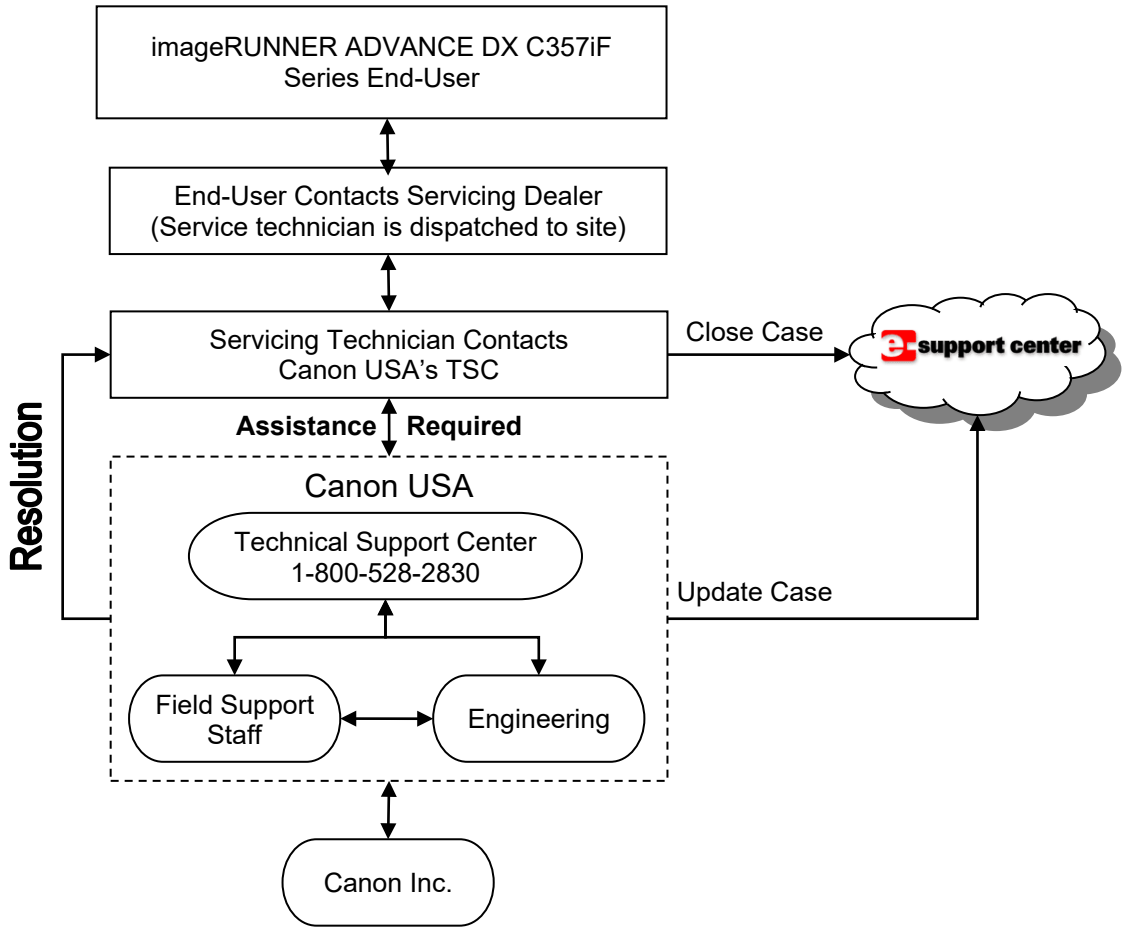

39 The Designated Escalation Specialist is a service technician who is assigned by the dealership in the model category of the imageRUNNER ADVANCE DX via the Management Center of the e-Support Website. The DES must complete the training program and pass the final assessment exam for the imageRUNNER ADVANCE DX Series. See the Technical Support Center on the e-Support Center Website for more details.

C. Internet Support

Canon USA's Engineering Services and Solutions Division provides high-quality e-Support via the Internet, and is only available for Canon USA's Authorized Servicing Dealers.

Canon USA's e-Support is designed to provide System Engineers and Technicians access to technical support information via the Worldwide Web.

The following functions and information can be accessed:

- Proactive notification of new releases, patches, Technical Publications, and other information via e-mail message
- Search for technical solutions with the Integrated Knowledge Management System through a natural language query
- Read or download on-line documentation
- Download patches and their Readme files
- Download firmware and software drivers
- Track and modify logged cases
- Review all open cases

To access e-Support, you must first register for an e-Support ID Number. To register for an e-Support ID number, go to the Canon USA's e-Support Center Website at http://www.support.cusa.canon.com.

D. Canon USA's Partner Portal Website

Canon USA's Partner Portal provides links to BICG Marketing and Service, Canon Network Access and the Learning Zone.

The Service and Support link provides access to view and download Service Guides, Customer Expectation Documents and Service Revenue/Profit Calculators.

Access is limited to an Authorized Dealer's Management staff. Please contact your Dealer Administrator to request access to the Partner Portal.

XII. Appendix

A. Specifications

Note: All specifications are for reference purposes only, and are subject to change without notice.

Table 29 – imageRUNNER ADVANCE DX C357iF Series Main Unit Specifications

Item		Specifications	
		imageRUNNER ADVANCE DX	
		C357iF	C257iF
Type		Color Laser Multi-functional Desktop	
Color Supported		Full Color	
Developing System		Dry 2-Component AC Developing System	
Fixing System		On-Demand	
Printer Memory		Up to 3 GB	
Hard Disk Drive[40]		250 GB	
First Copy Output Time (LTR)	Full Color	Up to 6.9 seconds	Up to 9.4 seconds
	B&W	Up to 5.1 seconds	Up to 6.9 seconds
Warm Up Time (at a room temp. of 68°F (20°C))	From Power ON[41]	Approximately 30 seconds	Approximately 34 seconds
	From Sleep Mode	Approximately 10 seconds	
	From the Quick Startup Mode[42]	Approximately 4 seconds	
Resolution for Writing		Up to 9,600 (equivalent) dpi x 600 dpi[43]	
Resolution for Reading		Up to 600 dpi x 600 dpi	
Number of Tones		256 Gradations	
Acceptable Originals		Sheet, book	
Paper Sizes	Paper Drawer 1	LGL, LTR, STMT, EXEC, Envelopes (No.10 (COM10), Monarch, DL, ISO-C5), and Custom Size (3 7/8” x 7 1/2” to 8 1/2” x 14” (99 mm x 191 mm to 216 mm x 355.6 mm))	
	Multi-Purpose Tray	LGL, LTR, STMT, EXEC, Envelopes (No.10 (COM10), Monarch, DL, ISO-C5), Custom Size (3 7/8” x 5 7/8” to 8 1/2” x 14” (99 mm x 148 mm to 216 mm x 355.6 mm)), and Envelope Custom Size: 3 7/8” x 5 7/8” to 8 1/2 to 14”	

40 The HDD capacity is subject to change in a future release.
41 Activation time may vary, depending on the environment and conditions under which the machine is being used.
42 Even if the Quick Startup mode is set to ‘On’, the Warm-Up time may be longer, depending on the conditions under which the machine is used.
43 Enhanced by smoothing technology.

Table 29 – imageRUNNER ADVANCE DX C357iF Series Main Unit Specifications Continued

Item		Specifications	
		imageRUNNER ADVANCE DX	
		C357iF	C257iF
Paper Weight/Type	Paper Drawer 1 (Simplex and Duplex)	Weight: 16 lb bond to 60 lb cover (60 to 163 g/m^2) Type: Thin, Plain, Recycled, Color, Pre-Punched, Bond, Heavy, and Envelopes[44]	
	Multi-Purpose Tray	Weight: 16 lb bond to 80 lb cover (60 to 220 g/m^2) Type: Thin, Plain, Recycled, Color, Pre-Punched, Bond, Heavy, Labels, Transparency, and Envelopes	
Paper Capacity	Paper Drawer 1	Approximately 550 sheets (20 lb bond (80 g/m^2)), or Approximately 640 sheets (17 lb bond (64 g/m^2))	
	Multi-Purpose Tray	Approximately 100 sheets (20 lb bond (80 g/m^2)) Approximately 120 sheets (17 lb bond (64 g/m^2))	
Copy Speed[45] (LTR, Except When Paper Is Fed from the Multi-Purpose Tray) (Sheets/Minute)		36	26
Margins		Top: 1/8” (4.0 mm) Left/Right: 1/8” (4.2 mm) Bottom: 1/8” (2.5 mm)	
Multiple Copies		1 to 999 sheets	
Inner Tray Capacity		Approximately 250 sheets (20 lb bond (80 g/m^2))	
Magnification	Reduction	1:0.78 (LGL → LTR) 1.0.64 (LTR → STMT) 1.0.50 1.0. 25	
	Enlargement	1.1.29 (STMT → LTR) 1.2.00 1.4.00	
	Copy Ratio	25% to 400% (in 1% increments)	
Power Requirements		110 to 127 V AC, 60 Hz, 6.9 A	
Plug		NEMA 5-15	
Power Consumption	Maximum	Approximately 1.5 kW	
	Standby	Approximately 38.9 W	
	In the Sleep Mode (Low)	Approximately 0.8 W	
	Main Power Is OFF	Quick Startup Settings for Main Power is set to ‘On’: Approximately 0.4 W Quick Startup Settings for Main Power is set to ‘Off’’: Approximately 0.1 W	

44 Envelopes can only be loaded in Paper Drawer 1.

45 The copy speed may vary, depending on the settings for the paper type, paper size, and sending method. Copying continuously may slow the copy speed, as adjustments are made to the machine’s temperature and image quality.

Table 29 – imageRUNNER ADVANCE DX C357iF Series Main Unit Specifications Continued

Item	Specifications	
	imageRUNNER ADVANCE DX	
	C357iF	C257iF
Dimensions (W x D x H)	Standard Desktop Model: 20 3/8” x 25 7/8” x 25 1/8” (519 mm x 658 mm x 638 mm) Fully Configured Model: 42 3/8” x 25 7/8” x 41 9/10” (1,706 mm x 658 mm x 1,064 mm)	
Weight	Standard Desktop Model[46]: Approximately 108 lb (49 kg)	
Installation Space (W x D)	When the Multi-Purpose tray and standard cassette are extended: 33 1/2” x 35 3/4” (852 mm x 908 mm) When the optional Staple Finisher-Z1 is attached, the Cassette Drawers are open, and the Multi-Purpose Tray is extended: 55 3/8” x 35 3/4” (1,407 mm x 908 mm)	

46 Includes the weight of the toner cartridges.

Table 30 – imageRUNNER ADVANCE DX C357 Series Productivity

The table below describes the approximate print speeds one should expect when printing one- or two-sided documents on the indicated paper size and type.

Paper Type	Size	Productivity (ppm)[47]			
		Cassettes		Multi-Purpose Tray	
		1-Sided	2-Sided	1-Sided	2-Sided
Plain 1 Recycled 1 Color Thin (60 to 75 g/m^2)	LTR	36	36	31	31
	LGL	29	16	26	15
	STMT	2-26	2-26	2-23	2-23
Plain 2 Recycled 2 Pre-punched (76 to 90 g/m^2)	LTR	36	36	31	31
	LGL	29	16	26	15
	STMT	2-26	2-26	2-23	2-23
Plain 3 Recycled 3 (91 to 105 g/m^2)	LTR	26	26	23	23
	LGL	21	11	19	11
	STMT	2-26	2-26	2-23	2-23
Heavy 1 (106 to 128 g/m^2)	LTR	18	18	16	16
	LGL	14	8	13	8
	STMT	2-18	2-18	2-16	2-16
Heavy 2 and 3 Bond (129 to 163 g/m^2)	LTR	18	18	16	16
	LGL	14	8	13	8
	STMT	2-18	2-18	2-16	2-16
Heavy 4 and 5 (164 to 200 g/m^2) Labels (127 to 160 g/m^2)	LTR	-	-	12	-
	LGL	-	-	10	-
	STMT	-	-	2-12	-
Transparency	LTR-	-	-	5	-
Postcard	A6	-	-	2-16	-
Envelope	Monarch	2-18	-	2-12	-
	COM 10				
	ISO C5				
	DL				

47 Productivity may range for non-LTR sizes due to changes in the environment and the job history (the temperature status of the Fixing Assembly).

Table 31 – imageRUNNER ADVANCE DX C257 Series Productivity

The table below describes the approximate print speeds one should expect when printing one- or two-sided documents on the indicated paper size and type.

Paper Type	Size	Productivity (ppm)[47]			
		Cassettes		Multi-Purpose Tray	
		1-Sided	2-Sided	1-Sided	2-Sided
Plain 1 Recycled 1 Color Thin (60 to 75 g/m^2)	LTR	26	26	23	23
	LGL	21	11	19	11
	STMT	2-26	2-26	2-23	2-23
Plain 2 Recycled 2 Pre-punched (76 to 90 g/m^2)	LTR	26	26	23	23
	LGL	21	11	19	11
	STMT	2-26	2-26	2-23	2-23
Plain 3 Recycled 3 (91 to 105 g/m^2)	LTR	26	26	23	23
	LGL	21	11	19	11
	STMT	2-26	2-26	2-23	2-23
Heavy 1 (106 to 128 g/m^2)	LTR	18	18	16	16
	LGL	14	8	13	8
	STMT	2-18	2-18	2-16	2-16
Heavy 2 and 3 Bond (129 to 163 g/m^2)	LTR	18	18	16	16
	LGL	14	8	13	8
	STMT	2-18	2-18	2-16	2-16
Heavy 4 and 5 (164 to 200 g/m^2) Labels (127 to 160 g/m^2)	LTR	-	-	12	-
	LGL	-	-	10	-
	STMT	-	-	2-12	-
Transparency	LTR-	-	-	5	-
Postcard	A6	-	-	2-16	-
Envelope	Monarch	2-18	-	2-12	-
	COM 10				
	ISO C5				
	DL				

47 Productivity may range for non-LTR sizes due to changes in the environment and the job history (the temperature status of the Fixing Assembly).

Table 32 – Automatic Document Feeder Specifications

Item			Specifications	
			imageRUNNER ADVANCE DX	
			C357iF	C257iF
Original Feeding Mechanism			Single-Pass Duplexing Automatic Document Feeder	
Size and Weight of Originals	Size		Maximum: LGL Minimum: 1 7/8" x 5" (48.0 mm x 128.0 mm)	
	Weight	B&W	1-Sided and 2-Sided Scanning: 13 to 34 lb bond (50 to 128 g/m^2)	
		Color	1-Sided and 2-Sided Scanning: 17 to 34 lb bond (64 to 128 g/m^2)	
Original Tray Capacity			Up to 100 sheets LTR (20 lb bond (80 g/m^2))	
Original Scanning Speed (LTR, Sheets/Minute)	Copying and Scanning	300dpi B&W/ CL	1-sided scanning: 100 ipm 2-sided scanning: 200 ipm	
		300 x 600dpi B&W/ CL	1-sided scanning: 50 ipm 2-sided scanning: 100 ipm	

Table 33 – Cassette Feeding Unit-AJ1 (Optional) Specifications

Item	Specifications
Paper Sizes	LGL, LTR, STMT, EXEC, and Custom Size (3 7/8” x 7 1/2” to 8 1/2” x 14” (99 mm x 191 mm to 216 mm x 355.6 mm))
Paper Drawer Capacity	550 sheets (20 lb bond (80 g/m^2)) or 640 sheets (17 lb bond (64 g/m^2))
Paper Weight	16 lb bond to 60 lb cover (60 to 163 g/m^2)
Power Source	From the main unit
Dimensions (W x D x H)	20 1/8” x 20” x 16 3/4” (511 mm x 508 mm x 425 mm)
Weight	Approximately 35.3 lb (16 kg)

Table 34 – Cassette Feeding Unit-AK1 (Optional) Specifications

Item	Specifications
Paper Sizes	LGL, LTR, STMT, EXEC, and Custom Size (3 7/8” x 7 1/2” to 8 1/2” x 14” (99 mm x 191 mm to 216 mm x 355.6 mm))
Paper Drawer Capacity	550 sheets (20 lb bond (80 g/m^2)) x 3 or 640 sheets (17 lb bond (64 g/m^2)) x 3
Paper Weight	16 lb bond to 60 lb cover (60 to 163 g/m^2)
Power Source	From the main unit
Dimensions (W x D x H)	20 1/8” x 20” x 16 3/4” (511 mm x 508 mm x 425 mm)
Weight	Approximately 41.9 lb (19 kg)

Table 35 – Cassette Module-AE1 (Optional) Specifications

Item	Specifications
Paper Sizes	LGL, LTR, STMT, EXEC, and Custom Size (3 7/8” x 7 1/2” to 8 1/2” x 14” (99 mm x 191 mm to 216 mm x 355.6 mm))
Paper Drawer Capacity	550 sheets (20 lb bond (80 g/m^2)) 640 sheets (17 lb bond (64 g/m^2))
Paper Weight	16 lb bond to 60 lb cover (60 to 163 g/m^2)
Power Source	From the main unit
Dimensions (W x D x H)	20 1/8” x 20” x 6 1/4” (511 mm x 508 mm x 159 mm)
Weight	Approximately 22 lb (10 kg)

Table 36 – Staple Finisher-Z1 (Optional) Specifications

Item	Specifications
Paper Size/Weight/Type	Size: LGL, LTR, STMT, EXEC, Custom Size (3 7/8” x 5 7/8”, to 8 1/2” x 14” (99 mm x 148 mm to 216 mm x 355.6 mm)), and Envelopes Weight: 16 lb bond to 80 lb cover (60 to 220 g/m^2) Type: Thin, Plain, Recycled, Color, Pre-Punched, Bond, Heavy, Labels, Transparencies, and Envelopes
Capacity Per Tray	**No Collating/Collate/Group and Collate + Offset and Group + Offset mode:** 500 sheets (or 2 7/8” (73.5 mm) in height) **No Collating/Collate/Group mode with different paper sizes:** 20 sets or less (or 2 7/8” (73.5 mm) in height) **Staple Mode** 500 sheets/20 sets (or 2 7/8” (73.5 mm) in height)
Maximum Stapling Capacity	**Corner Staple Mode:** 30 sheets (up to 28 lb bond (105 g/m^2)) 2 sheets (up to 80 lb bond (220 g/m^2))
Available Paper Sizes for Stapling	LGL, LTR, and EXEC
Power Source	From the main unit
Dimensions (W x D x H)	21 7/8” x 18 1/8” x 11 7/8” (555 mm x 459 mm x 301 mm)
Weight	Approximately 30.9 lb (14 kg)
Installation Space (W x D) Including the Main Unit	55 3/8” x 25 7/8” (1,407 mm x 658 mm) (When the multi-purpose tray is extended)

Table 37 – Copy Card Reader-F1 (Optional) Specifications

Item	Specifications
Available Cards	Magnetic
Card Readout Method	Magnetic readout
Magnetic Card Reading Direction	Face up
Store/Replay	Replay
Power Source	From the main unit
Dimensions (W x D x H)	3 1/2” x 3 3/4” x 1 5/8” (88 mm x 96 mm x 40 mm) (Excludes the attachment kit and cable)
Weight	Approximately 7.1 oz (200 g) (Including the attachment kit and cable)

Table 38 – Fax Functions Specifications

Item	Specifications
Telephone Line Used[48]	Public Switched Telephone Network
Scan Line Density (Scan, Transmission)	Normal: 8 pels[49]/mm x 3.85 line/mm Fine: 8 pels/mm x 7.7 line/mm Super-Fine: 8 pels/mm x 15.4 line/mm Ultra-Fine: 16 pels/mm x 15.4 line/mm
Transmission Speed	Super G3: 33.6 kbps G3: 14.4 kbps
Compression Method	MH, MR, MMR, JBIG
Transmission Type	Super G3, G3
Sending Original Sizes	LGL, LTR, and STMT
Receiving Original Sizes	LGL, LTR, and STMT
Transmission Times (LTR, Normal)	JBIG: Approximately 2.6 seconds

48 When using an IP telephone service, facsimile communication via an IP telephone line, may not be performed normally. It is recommended to use a general telephone (Public Switched Telephone Network) line for facsimile communication.
49 Pels stands for picture elements (pixels).

Table 39 – Send Function: Scan Specifications

Item	Specifications
Supported Communication Protocols	FTP (TCP/IP), FTPS (UFP 3.10 and above), SMB (TCP/IP), WebDAV, and SMTP
Output Format	TIFF (MMR), JPEG[50], PDF (Compact, OCR (Text Searchable), Apply Policy, Optimize PDF for Web, Format to PDF/A, Trace & Smooth, Encrypt), XPS (Compact), PDF/XPS (Device Signature, User Signature), Office Open XML (PowerPoint, Word)
Scan Resolution	100 x100 dpi, 150 x 150 dpi, 200 x 100 dpi, 200 x 200 dpi, 200 x 400 dpi, 300 x 300 dpi, 400 x 400 dpi, 600 x 600 dpi
Interface	10 Base-T, 100 Base-TX, and 1,000 Base-T
Color Mode	Color/Black-and-White Auto Switch, Full Color, Grayscale, Black-and-White

Table 40 – Send Function: I-Fax Specifications

Item	Specifications
Communication Protocol	Internet Fax: SMTP (Send[51]), POP3 (Receive[52]) Intranet Fax: SMTP (Send/Receive[51])
I-Fax Communication Mode	Simple, Full (ITU-T T.37 and W-NET FAX compliant)
Resolution	200 dpi x 100 dpi, 200 dpi x 200 dpi, 200 dpi x 400 dpi[53], 300 dpi x 300 dpi[53], 400 dpi x 400 dpi[53], 600 dpi x 600 dpi[53]

50 Single page only
51 Supports SMTP authentication and encrypted communications (TLS) during SMTP send/receive.
52 Supports APOP/POP before SMTP and encrypted communication (TLS) during POP RX.
53 Available depending on settings of the other party (capability setting of the receiving machine).

Table 41 – Wired LAN Specifications

Item		Specifications
Interface		10 Base-T/100 Base-TX/1,000 Base-T (RJ-45)
TCP/IP	Frame Type	Ethernet II
	Print Applications	LPD, Raw, IPP, IPPS, FTP, FTPS (UFP 3.10 and above), WSD, SMB, Mopria, AirPrint, Windows 10 Mobile Print
AppleTalk	Frame Type	Ethernet SNAP
	Print Applications	PAP (Printer Access Control)

Table 42 – Wireless LAN Specifications

Item	Specifications
Standard	IEEE 802.11b/g/n
Transmission Scheme	IEEE 802.11b – Modulation System: DS-SS
	IEEE 802.11g – Modulation System: OFDM method
	IEEE 802.11n – Modulation System: OFDM method
Frequency Range	2.412 to 2.462 GHz
Maximum Radio Frequency Power Transmitted	18.21 dBm
Security (Encryption Method)	**Infrastructure Mode:** • 128 (104)/64 (40) bit WEP • WPA-PSK (TKIP/AES-CCMP) • WPA2-PSK (TKIP/AES-CCMP) • WPA-EAP (AES-CCMP) • WPA2-EAP (AES-CCMP) **Access Point Mode** WPA2-PSK (AES-CCMP)
Connection Method	WPS (Wi-Fi Protected Setup), Manual Setup

Table 43 – Printer Function Specifications

Item		Specifications
Network Interface		10 Base-T/100 Base-TX/1,000 Base-T
Command Languages		PCL5c, PCL6, PostScript 3
Support Protocols		TCP/IP (LPD/Port9100/IPP/IPPS/FTP/WSD)
Resident Fonts	UFR II	N/A
	PCL	93 Scalable fonts, 2 OCR fonts, 10 Bitmap fonts, Andale Font[54] (Japanese, Korean, Simplified Chinese, Traditional Chinese), Barcode fonts[55]
	PS	136 Scalable Adobe Roman fonts
Data Processing Resolution	UFR II	600 x 600 dpi, 1,200 x 1,200 dpi
	PCL	PCL 5c: 600 x 600 dpi PCL6: 600 x 600 dpi, 1,200 x 1,200 dpi
	PS	600 x 600 dpi, 1,200 x 1,200 dpi
Compatible Operating Systems	UFR II	Windows 7/8.1/10/Server 2008/Server 2008 R2/Server 2012/Server 2012 R2/Server 2016/Server 2019 Mac OS X (10.10 or later)
	PCL	Windows 7/8.1/10/Server 2008/Server 2008 R2/Server 2012/Server 2012 R2/Server 2016/Server 2019
	PS	Driver • Windows 7/8.1/10/Server 2008/Server 2008 R2/Server 2012/Server 2012 R2/Server 2016/Server 2019 • Mac OS X (10.10 or later) PPD • Windows 7/8.1/10 • Mac OS X (10.9 or later)

Notes:

- When printing in the Expand Print Region and Print mode, the printable area is enlarged. The upper margin becomes 1/8” (4 mm), the lower margin becomes 1/8” (2.5 mm), and the side margins become 1/8” (4.2 mm).
- When an original has data that extends all the way to the edges, even if the Expand Print Region and Print mode is selected, the periphery of the data may be cut off when printing. In this case, specify the reduction ratio in the printer driver so that the data is not cut off, and then try to print again.

54 The optional PCL International Font Set must be activated to use Andale and WorldType Collection, or Andale Mono WT fonts.
55 Requires the optional Barcode Printing Kit.

B. Canon imageRUNNER ADVANCE DX C357iF Series Limited Warranty

CANON imageRUNNER ADVANCE DX C257iF/C357iF SERIES LIMITED WARRANTY

Canon U.S.A., Inc. or Canon Canada Inc. (as applicable, "Canon") warrants the imageRUNNER ADVANCE DX C257iF/C357iF Series product and Canon brand options designed for use with the imageRUNNER product (collectively the "Product") to be free from defects in workmanship and materials under normal use and service for a period of 90 days after delivery to the original purchaser ("Purchaser") or 30,000 prints or copies (or a combination of both), whichever comes first. During such warranty period, Canon shall replace, without charge, any defective part with a new or comparable rebuilt part. This warranty shall not extend to consumables such as paper, chemicals, and toner as to which there shall be no warranty or replacement. Warranty replacement shall not extend the original warranty period of the Product.

This limited warranty shall only apply if the Product is used in conjunction with compatible computers, peripheral equipment and software. Canon shall have no responsibility for such items except for compatible Canon brand peripheral equipment covered by a separate warranty ("Separate Warranty"). Repairs of such Canon brand peripheral equipment shall be governed by the terms of the Separate Warranty. Non-Canon brand equipment that may be distributed with the Product is sold "AS IS" and without warranty of any kind by Canon, including any implied warranty regarding merchantability or fitness for a particular purpose, and all such warranties are disclaimed. The sole warranty, if any, with respect to such non-Canon brand items is given by the supplier or producer thereof. For further information on software, see below.

This warranty shall be void and of no force and effect if the Product is damaged as a result of (a) abuse, neglect, mishandling, alteration, electric current fluctuation or accident, (b) improper use, including failure to follow operating or maintenance instructions or environmental conditions prescribed in Canon's operator's manual or other documentation, (c) installation or repair by other than authorized service representatives qualified by Canon who are acting in accordance with Canon's service bulletins, (d) use of supplies or parts (other than those distributed by Canon) which damage the Product or cause abnormally frequent service calls or service problems, or (e) use of the Product with non-compatible computers, peripheral equipment or software, including the use of the Product in any system configuration not recommended in any manual distributed with the Product. Nor does this warranty extend to any Product on which the original identification marks or serial numbers have been defaced, removed, or altered.

ANY SOFTWARE THAT IS DISTRIBUTED WITH THE PRODUCT AND HAS AN ASSOCIATED END USER AGREEMENT IS LICENSED, WARRANTED AND PROVIDED ACCORDING TO THE TERMS OF THAT AGREEMENT, INCLUDING ANY LIMITATIONS AND DISCLAIMERS THEREIN. SUCH SOFTWARE IS SOLD WITHOUT WARRANTY OF ANY KIND BY CANON. PLEASE CONTACT CANON IMMEDIATELY IF YOU HAVE NOT RECEIVED A COPY OF THE SOFTWARE SUPPLIER'S END USER AGREEMENT. CANON RECOMMENDS THAT DATA STORED ON THE PRODUCT'S HARD DISK DRIVE BE DUPLICATED OR BACKED UP TO PREVENT ITS LOSS IN THE EVENT OF FAILURE OR OTHER MALFUNCTION OF THE HARD DISK DRIVE.

THE ABOVE WARRANTIES ARE IN LIEU OF ALL OTHER WARRANTIES AND CONDITIONS, EXPRESS OR IMPLIED, INCLUDING ANY IMPLIED WARRANTIES AND CONDITIONS REGARDING MERCHANTABILITY OR FITNESS FOR A PARTICULAR PURPOSE, RELATING TO THE USE OR PERFORMANCE OF A PRODUCT OR ANY ASSOCIATED COMPONENT, AND ALL SUCH OTHER WARRANTIES AND CONDITIONS ARE DISCLAIMED. NO OTHER EXPRESS WARRANTY, CONDITION OR GUARANTY, EXCEPT AS MENTIONED ABOVE, GIVEN BY ANY PERSON, FIRM OR CORPORATION WITH RESPECT TO THE PRODUCT SHALL BIND CANON ANY SUPPLIER OR ANY AUTHORIZED SERVICE PROVIDER. NO WARRANTY IS GIVEN ON ANY USED PRODUCT.

NEITHER CANON OR ITS SUPPLIERS NOR ANY AUTHORIZED SERVICE PROVIDER SHALL BE LIABLE FOR PERSONAL INJURY OR PROPERTY DAMAGE (UNLESS CAUSED SOLELY AND DIRECTLY BY THE NEGLIGENCE OF CANON OR ANY AUTHORIZED SERVICE PROVIDER), LOSS OF REVENUE OR PROFIT, FAILURE TO REALIZE SAVINGS OR OTHER BENEFITS, EXPENDITURES FOR SUBSTITUTE EQUIPMENT OR SERVICES, LOSS OR CORRUPTION OF DATA, INCLUDING, WITHOUT LIMITATION, DATA STORED ON THE PRODUCT'S HARD DISK DRIVE, STORAGE CHARGES OR OTHER SPECIAL, INCIDENTAL OR CONSEQUENTIAL DAMAGES CAUSED BY THE USE, MISUSE OR INABILITY TO USE THE PRODUCT, REGARDLESS OF THE LEGAL THEORY ON WHICH THE CLAIM IS BASED AND EVEN IF CANON OR ITS SUPPLIERS OR ANY AUTHORIZED SERVICE PROVIDER HAS BEEN ADVISED OF THE POSSIBILITY OF SUCH DAMAGES. NOR SHALL RECOVERY OF ANY KIND AGAINST CANON OR ITS SUPPLIERS OR ANY AUTHORIZED SERVICE PROVIDER BE GREATER IN AMOUNT THAN THE PURCHASE PRICE OF THE PRODUCT CAUSING THE ALLEGED DAMAGE. WITHOUT LIMITING THE FOREGOING, THE PURCHASER ASSUMES ALL RISKS AND LIABILITY FOR LOSS, DAMAGE OR INJURY TO PERSONS AND PROPERTY OF THE PURCHASER OR OTHERS ARISING OUT OF THE POSSESSION, USE, MISUSE, OR INABILITY TO USE THE PRODUCT NOT CAUSED SOLELY AND DIRECTLY BY THE NEGLIGENCE OF CANON OR ANY AUTHORIZED SERVICE PROVIDER. THIS WARRANTY SHALL NOT EXTEND TO ANYONE OTHER THAN THE ORIGINAL PURCHASER OF THE PRODUCT AND STATES SUCH PURCHASER'S EXCLUSIVE REMEDY.

CONDITIONS OF WARRANTY

Defective parts must be returned to Canon or an Authorized Service Provider with all necessary documentation and will become the property of Canon.

THIS WARRANTY APPLIES TO PRODUCTS SOLD AND USED IN THE U.S.A. AND CANADA ONLY.

C. List of Tables

Table 1 – Configuration 4
Table 2 – Hardware Accessories 5
Table 3 – System Accessories 6
Table 4 – imageRUNNER ADVANCE Integrated Solutions 7
Table 5 – Supplies and Consumables 8
Table 6 – Monthly Copy/Print Volume 9
Table 7 – Training for New Service Technicians 36
Table 8 – Training for Technicians with imageRUNNER ADVANCE C350iF and C250iF Certification 37
Table 9 – Recommended Training for Technicians with imageRUNNER ADVANCE C356iF III/C256iF III Certification 37
Table 10 – Service Materials 39
Table 11 – Main Unit Power and Plug Requirements 40
Table 12 – Power Requirements for the Main Unit and Optional Accessories 40
Table 13 – imageRUNNER ADVANCE DX C357iF/C257iF Installation Space Requirements 42
Table 14 – Estimated Installation Times 44
Table 15 – CDS Firmware Delivery Methods 49
Table 16 – Main Unit Consumables List 59
Table 17 – Main Unit Consumable Parts List 61
Table 18 – Soft Counter Configuration 62
Table 19 — Toner Bottle Counters 64
Table 20 - Installation and Parts Replacement Scenarios 66
Table 21 – Less Maintenance Items, Personnel Who Can Install, and Where to Find Installation Information 67
Table 22 – Setup Guide Settings 68
Table 23 – Parts Replacement Scenarios 69
Table 24 – Less Maintenance - Timing of Drums and Waste Toner Container Replacement Scenario 1 (Pre-Notificatlon) 71
Table 25 – Less Maintenance - Timing of Drums and Waste Toner Container Replacement Scenario 1 (Replacement) 71
Table 26 – Less Maintenance - Timing of Drums and Waste Toner Container Replacement Scenario 1 (Completion) 72
Table 27 – Less Maintenance - Target Parts for Replacement Scenario 2 73
Table 28 – Less Maintenance - Target Parts for Replacement Scenario 3 74
Table 29 – imageRUNNER ADVANCE DX C357iF Series Main Unit Specifications 83
Table 30 – imageRUNNER ADVANCE DX C357 Series Productivity 86
Table 31 – imageRUNNER ADVANCE DX C257 Series Productivity 87
Table 32 – Automatic Document Feeder Specifications 88
Table 33 – Cassette Feeding Unit-AJ1 (Optional) Specifications 89
Table 34 – Cassette Feeding Unit-AK1 (Optional) Specifications 89
Table 35 – Cassette Module-AE1 (Optional) Specifications 89
Table 36 – Staple Finisher-Z1 (Optional) Specifications 90
Table 37 – Copy Card Reader-F1 (Optional) Specifications 91
Table 38 – Fax Functions Specifications 91
Table 39 – Send Function: Scan Specifications 92
Table 40 – Send Function: I-Fax Specifications 92
Table 41 – Wired LAN Specifications 93
Table 42 – Wireless LAN Specifications 93
Table 43 – Printer Function Specifications 94

D. List of Figures

Figure 1 – License Management System **54**
Figure 2 – Content Delivery System Website **55**
Figure 3 – Setup Guide **68**
Figure 4 – Less Maintenance - Parts Replacement Based on Warning Message Scenario .. **70**
Figure 5 – Drum Protective Cover **70**
Figure 6 – Less Maintenance - Parts Replacement via Telephone Scenario **73**
Figure 7 – Less Maintenance - Parts Replacement via Customer When a Technician Does Not Have the Necessary Parts Scenario **74**
Figure 8 – Remote Support with the Standard Remote Operator's Software Kit **77**
Figure 9 – Canon USA Support Escalation Flow Chart **81**