imagePRESS V1000

Customer Expectations Document



Engineering Services and Solutions
Business Information Communications Group, Canon U.S.A., Inc.

Contents

1. Introduction 8
2. Product Overview 9
2.1 Summary of Functions 10
2.2 Offset Press vs. Digital imagePRESS 11
2.3 PRISMAsync Controller 12
2.3.1 PRISMAsync V8.3 Features 13
2.3.2 PRISMAsync Standard Software 14
2.3.3 PRISMAsync Optional Software 15
2.3.4 PRISMAsync System Backup 15
2.3.5 PRISMAsync Firmware Updates 16
2.4 Notes on the Engine's Storage Drive 17
2.5 Customer-Defined Image Quality Adjustments and Recommendations 18
2.6 Unified Firmware Platform Overview 19
2.7 Unified Firmware Platform Features 20
2.8 Input and Output Accessories 21
2.9 Storage Capabilities 23
2.9.1 Mail Box 23
2.9.2 Network 23
2.10 Security Features 24
2.10.1 Device Authentication 24
2.10.2 Device Security 25
2.10.3 Data Security 26
2.10.4 Document Security 29
2.10.5 Network Security 30
3. System Options 31
3.1 Copy and Print Options 31
3.1.1 imagePRESS D3000 Controller 31
3.1.2 Media Librarian 32
3.2 Universal Send Features 33
3.2.1 Color Universal Send 33
3.2.2 Universal Send PDF Advanced Features 33
3.2.3 Universal Send PDF Security Features 33
3.3 Data Security and Wireless Options 34
3.3.1 480 GB SSD Kit-A1 34
3.3.2 Memory Mirroring Kit-E1 34
3.4 Accessibility Options 35
3.4.1 ADF Access Handle-A1 35
3.5 Advanced Automation Options 36
3.5.1 Inspection Unit-B1 36
3.5.2 Sensing Unit-B1 37
3.6 PRISMAdirect 38
3.7 Remote Operator Software 38

4. Machine Dimensions and Space Requirements 39
4.1 Dimensions 39
4.2 Weight 41
4.3 Installation and Service Space 42
4.3.1 Minimum Space Requirements to Transport the Machine and Turn Hallway Corners 43
4.3.2 Installation Space Diagrams 44
4.4 Recommended Floor Space Requirements 50
4.5 Floor Structure Requirements 51
4.6 Potential System Configurations 52
5. Power/Electrical Requirements 53
5.1 Power Requirements for the Main Unit and Optional Accessories 54
6. Environmental Factors and Requirements 56
6.1 Temperature and Humidity Conditions 56
6.2 Temperature Gradient 56
6.3 Ventilation 57
6.4 Elevation Limitations 57
6.5 Lighting 57
6.6 Sunlight 57
6.7 Ammonia 57
7. Specifications 58
7.1 Main Unit 58
7.2 PRISMAsync Controller 61
7.2.1 USB Stick 62
7.3 imagePRESS Server D3000 Controller 63
7.4 Multi-Drawer Paper Deck-E1 64
7.5 POD Deck Lite-C1 65
7.6 POD Deck Lite XL-A2 65
7.7 Long Sheet Catch Tray XL-B1 66
7.8 Tab Feeding Attachment-F1 66
7.9 Stack Bypass-D1 66
7.10 Duplex Color Image Reader-P1 67
7.11 High Capacity Stacker-J1 67
7.12 Staple Finisher-AF1/Booklet Finisher-AF1 68
7.13 Puncher Unit-BS1 71
7.14 Booklet Trimmer-G1 72
7.15 Two-Knife Booklet Trimmer-B1 73
7.16 GBC Multi Function Professional Puncher-C1 74
7.17 Perfect Binder-F1 75
7.17.1 Perfect Binder Continuous Kit-B1 76
7.18 Document Insertion Unit-R1 76
7.19 Paper Folding Unit-K1 77
7.20 PowerLift 77
7.21 SDD Square Fold Booklet Maker 78
7.22 SDD Square Fold Booklet Maker with Two-Knife Trimmer 79

7.23 SDD BLM300C Professional Booklet Maker 80
7.23.1 SDD Front Trimmer BLT6989 81
7.23.2 SDD 2-Knife Trimmer STR6702 82
7.23.3 SDD Square Fold SFM6904 83
7.23.4 SDD Rotator RTM6940 83
7.23.5 SDD Long Belt Stacker BST6800 84
7.23.6 SDD Short Belt Stacker BST6900 84
7.24 Plockmatic BLM50/BLM35 Professional Booklet Maker 85
7.24.1 Plockmatic Trimmer FTR50 86
7.24.2 Plockmatic Rotate Crease Trimmer RCT50 86
7.24.3 Plockmatic Cover Feeder CF50 86
7.24.4 Plockmatic Booklet Fold Module BF50 87
7.24.5 SDD Front Trimmer BLT6989 87
7.25 DFD Adapter-B1 and Finisher Bridge Unit-A1 88
7.25.1 DFD Adapter-B1 88
7.25.2 Finisher Bridge-A1 88
7.26 GBC eWire Pro Wire Binding System 89
7.26.1 Binding Specifications 89
7.26.2 Bypass Specifications 90
7.27 Plockmatic Multi-Purpose Stacker 91
7.28 Inspection Unit-B1 92
7.28.1 Inspection Unit Specifications 92
7.28.2 Workstation Unit Specifications 93
7.29 Sensing Unit-B1 94
8. Installation Review 96
8.1 Installation Time 96
8.2 Customer Installation Responsibilities 98
9. Customer Productivity Program 99
10. Consumable Items 100
10.1 Usage Conditions 100
10.2 Estimated Life of Consumables 101
10.3 Consumable Parts 102
11. Waste Toner Yields 103
12. Estimated Performance Standards 104
13. Optimum Monthly Product Performance 105
14. Machine Productivity 106
14.1 Machine Reliability and Service Call Ratio 106
14.2 Print Speed 107
14.3 Mixed Media Productivity 115
14.4 Paper and Toner Replacement 115

15. Media Usage/Compatibility 116
15.1 Media Characteristics by Media Library Parameters 116
15.2 Image Quality Adjustment Settings 118
15.3 Action Adjustment Settings 118
15.4 Paper Handling and Storage 119
15.5 Paper Grain and Curl 120
15.6 Note for Customers Who Cut Their Own Paper 121
15.7 Media Sizes and Feed Location Chart 121
16. Responsibility Matrix 123

IMPORTANT

The purpose of this Customer Expectations Document is to explain the current features and capabilities of the imagePRESS V1000, and provide customers information about what to expect before purchasing the machine.

The information included in this document has been pulled from various sources, including product reference guides, service guides, and user manuals. Specifications and other information contained herein may vary slightly, and in a non-material way, from actual device values, including those found in advertising and other printed matter. Part numbers, yield information, and specifications are subject to change without notice. Accordingly, the latest specifications for the machine may not be found in this document. As new information becomes available, this document will be revised. Canon authorized dealers can access the latest revision of this document from the Download Center page in the e-Support Website (support.cusa.canon.com).

REVISION HISTORY

Revision	Date	Section(s)	Details
-	May 2022	All	Initial release of imagePRESS V1000 Customer Expectations Document
1	May 2022	2, 3, 7, 8	Update standard SSD capacity to 480 GB
2	June 2022	7, 11	• Update two-knife booklet trim specs • Add approximate image count for toner near full alarm
3	November 2022	7	• Update long sheet paper weights for POD Deck Lite XL • Add extra language for supported envelope size with High Capacity Stacker
4	January 2023	7	• Add detailed specifications for Stack Bypass-D1 • Clarification of Inspection Unit compatibility with print controllers and other accessories

DISCLAIMER

NEITHER CANON NOR ITS SUPPLIERS NOR ANY AUTHORIZED SERVICE PROVIDER SHALL BE LIABLE FOR PERSONAL INJURY OR PROPERTY DAMAGE (UNLESS CAUSED SOLELY AND DIRECTLY BY THE NEGLIGENCE OF CANON OR ANY AUTHORIZED SERVICE PROVIDER), LOSS OF REVENUE OR PROFIT, FAILURE TO REALIZE SAVINGS OR OTHER BENEFITS, EXPENDITURES FOR SUBSTITUTE EQUIPMENT OR SERVICES, LOSS OR CORRUPTION OF DATA, INCLUDING, WITHOUT LIMITATION, DATA STORED ON THE PRODUCT'S HARD DISK DRIVE, STORAGE CHARGES OR OTHER SPECIAL, INCIDENTAL OR CONSEQUENTIAL DAMAGES CAUSED BY THE USE, MISUSE OR INABILITY TO USE THE PRODUCT, REGARDLESS OF THE LEGAL THEORY ON WHICH THE CLAIM IS BASED AND EVEN IF CANON OR ITS SUPPLIERS OR ANY AUTHORIZED SERVICE PROVIDER HAS BEEN ADVISED OF THE POSSIBILITY OF SUCH DAMAGES. NOR SHALL RECOVERY OF ANY KIND AGAINST CANON OR ITS SUPPLIERS OR ANY AUTHORIZED SERVICE PROVIDER BE GREATER IN AMOUNT THAN THE PURCHASE PRICE OF THE PRODUCT CAUSING THE ALLEGED DAMAGE. WITHOUT LIMITING THE FOREGOING, THE PURCHASER ASSUMES ALL RISKS AND LIABILITY FOR LOSS, DAMAGE OR INJURY TO PERSONS AND THE PROPERTY OF THE PURCHASER OR OTHERS ARISING OUT OF THE POSSESSION, USE, MISUSE, OR INABILITY TO USE THE PRODUCT NOT CAUSED SOLELY AND DIRECTLY BY THE NEGLIGENCE OF CANON OR ANY AUTHORIZED SERVICE PROVIDER.

Copyright 2023 by Canon U.S.A., Inc. All rights reserved.

Product and company names used herein are, or may be, the registered trademarks or trademarks of their respective owners.

1. Introduction

The Canon imagePRESS V1000 Customer Expectations Document contains information about the features and capabilities of the Canon imagePRESS V1000. This document should be used as part of the presale and preinstallation planning processes to help clarify the requirements and responsibilities associated with supporting, owning, and operating the imagePRESS V1000. It is also recommended that those interested in purchasing the imagePRESS V1000 have, and familiarize themselves with, the information in this document prior to making their purchase.

2. Product Overview

The Canon imagePRESS V1000 brings the following capabilities to users in high- and mid-volume production environments, including commercial printers, quick printers, transaction printers, and CRD customers:

- Printing speeds of up to 101 ipm (images per minute, LTR) for color and black-and-white.
- Optional integrated 10.1” full-color touch screen operation panel for the total system.
- One media catalog for the total system.
- High-image quality on various media with a large image area, keeps the color consistent and durable.
- Prints up to 2,400 x 2,400 dpi (dots per inch)[1].
- Multiple technologies ensure reliable media handling from 14 lb bond to 148 lb cover (52 to 400 g/m2).
- Optional PRISMAsync controller offers scheduling feedback software for production planning on the user interface for up to 8 hours.
- Integration with third-party accessories, such as the SDD BLM300C Professional Booklet Maker.
- Support for synthetic media (polypropylene and polyester)
- Support for up to 13” x 51.2” (330.2 mm x 1,300 mm) paper using the Long Sheet Tray (simplex)
- Support for duplex printing of long sheets up to 13” x 51.2” (330.2 mm x 1,300 mm).
- Semi-automatic front-to-back registration for long sheets up to 13” x 51.2” (330.2 mm x 1,300 mm)[2]
- Unified Firmware Platform support
- Advanced Automation Modules to automate calibration, adjustment, and quality inspection.

1 The maximum RIP resolution for sheets longer than 19.2” (488 mm) is 600 x 600 dpi.
2 Required Reader.

2.1 Summary of Functions

Function				imagePRESS V1000
Print Speed (LTR)	Color			101 ipm
	B&W			
Scan Speed[3] (LTR)	Simplex	600 dpi	Color	Approximately 80 ipm
			B&W	Approximately 80 ipm
		300 dpi	Color	Approximately 135 ipm
			B&W	
	Duplex	600 dpi	Color	Approximately 90 ipm
			B&W	Approximately 160 ipm
		300 dpi	Color	Approximately 270 ipm
			B&W	Approximately 270 ipm
DADF				Optional Duplex Automatic Document Feeder, 300-sheet capacity (20 lb bond (80 g/m²))
Maximum Engine Resolution				2,400 x 2,400 dpi[1]
Gradations				256 levels
Paper Size	Minimum			3.9" x 5.8" (100 mm x 148 mm)
	Maximum			13" x 51.2" (330.2 mm x 1,300[4] mm)
Paper Weight (Drawers)	Coated			19 lb bond to 148 lb cover (70 to 400 g/m²)
	Uncoated			14 lb bond to 148 lb cover (52 to 400 g/m²)
Maximum Imageable Area				Non-Long Sheets: 12.7" x 18.9" (323 mm x 479.7 mm)[5] Long Sheet: 12.7" x 50.9" (323 mm x 1,292 mm)
Storage Capacity				480 GB SSD
Printer Memory				6 GB
Copy				Optional with the Color Image Reader-P1
Store	Mail Box			Standard (Up to 100 mail boxes)
Print	PCL 5c/PCL 6			Standard with imagePRESS Controller
	Adobe PostScript 3			Standard with imagePRESS Controller
	imagePRESS Server			Optional with the imagePRESS Server D3000
Send	Universal Send			Standard
	Searchable PDF			Standard
	Trace and Smooth PDF			Standard
	OOXML			Standard
Network				Standard Ethernet 10Base-T/100Base-TX/1000 Base-T
Remote UI				Standard
Security	User Authentication			Standard
	Security Policy Support			Standard
	Verify System at Startup			Standard

1 The maximum RIP resolution for sheets longer than 19.2" (488 mm) is 600 x 600 dpi.

3 The scanning speed may vary, depending on the scanning mode and original type selected.
4 Very long sheets require access to Service Mode.
5 The maximum guaranteed print size is 12.6" x 19 " (320.6" mm x 482.7 mm)

2.2 Offset Press vs. Digital imagePRESS

Offset printing is a technique that transfers (or “offsets”) an inked image from a plate to a rubber blanket, and then to the printing surface. This enables the offset press to maintain a consistent and high image quality over long print runs because the plate never touches the paper. The process requires a substantial investment in equipment and setup time to achieve these results.

A **digital press** uses an electrostatic process to produce “offset-like” image quality at a fraction of the cost of an offset press. In the imagePRESS V1000 digital press, the drum is imaged; the toner is applied, and then transferred to the ITB (Intermediate Transfer Belt). The ITB then transfers all four toner colors to the paper in one single pass. The small toner particle size captures a greater color gamut space, closer to that of an offset press.

2.3 PRISMAsync Controller

The imagePRESS V1000 can be powered by the PRISMAsync Color Print Controller.

The PRISMAsync controller seamlessly enables the customer to streamline their workflow and turnout more work in less time with the following features:

- Scheduler - Plan-ahead functionality for multiple jobs simultaneously. The scheduler only shows an estimated job completion time, not the actual time it may take to complete a job. The actual job completion time may vary, depending on mixed media jobs, mixplex jobs, selected Finishing settings, and color adjustments.
- A waiting and scheduled jobs queue and printed jobs archive.
- One queue and job management for printing and copying.
- Streaming (spooling, RIPing, printing, and cleaning up simultaneously).
- Multiple standard and customizable workflow profiles.
- Media-based operation with PRISMA media catalog.
- PRISMAsync controller settings are accessible via a Web browser.
- Professional high-speed and accurate color processing achieved with the Adobe ACE (Adobe Color Engine) color management module and dedicated GPU (Graphics Processor Unit).
- Calibration per media family and halftone.
- Spot color editing, including CMYK value definition for spot color tints.
- CMYK curve editing per media family and halftone.
- RGB editing – Adjust the brightness, contrast, and color to reach the quality of the scanned or printed image.
- USB printing and Scan to USB functionality. To use the Scan to USB function, the Scanning license must be activated, and the optional Color Image Reader-M2 must be attached to the machine.
- Unlimited color preset definitions for reuse.
- Workflow automation via SMB, LPR (Line Printer Request) queues, and PDF/PS hot folders, as well as driver templates.
- Standard E-Shredding and Scanning licenses. To use the Scanning function, the optional Duplex Image Reader must be attached to the machine.
- Standard X-Rite i1 Spectrophotometer.
- Perfect binding support with the optional Perfect Binder using PRISMAprepare and Advanced Imposition software.
- Forward jobs directly from one PRISMAsync engine to another PRISMAsync engine
- Support for Adobe APPE (V4.2) for Native PDF Printing
- Connect to a shared printer without the need to install it.
- Use the Color Management System (CMS) Workflow Editor to reduce the number of order instructions to configure a workflow (four orders down to one).

2.3.1 PRISMAsync V8.3 Features

The latest PRISMAsync controller includes the following new features:

- **Engine Color Calibration & Management Automation (CMS Automation)** – CMS Automation allows users to combine multiple color management tasks (Auto Gradation Adjustment, Cross Shade Adjustment, Media Family Calibration, G7 Verification) into one customizable action, ensure all tasks are in the proper order with the correct media, and show results on the display and via a downloadable report.

- **"Advanced Imposition Layout" Option** – Using the new option, operators can set standard and custom imposition layout patterns for non-variable data jobs directly at the local UI:

  - Fold imposition
  - Same Up
  - Cut & Stack
  - Manual gutters (across sheet)
  - Align & Shift (across sheet)
  - Print/Trim Marks

- **Multiple Job Edit** – Users can apply the same job parameters to multiple jobs at the same time using an Automated Workflow.

- **Edit/View Automated Workflow (AWF) settings at UI** – Automated Workflow can be set at the engine in addition to in the Settings Editor.

- **Double Punch** - When the Multi Function Professional Puncher is connected, the Double Punch job parameter can be set at the operator panel.

- **M1 Measurement** – Improved light measurement is made when reading patches with the i1 Basic Pro 3 connected.

- **Secure JMF** - An increased level of security is introduced by extending the JMF support settings group to enable configuring JMF over HTTPS.

- **JMF Status Improvement** - In addition to DeviceStatus and Status details, the new and always-unique "StatusDescription" helps operators understand the cause of an issue and how to address it.

2.3.2 PRISMAsync Standard Software

This section describes the software bundle that is packaged with the PRISMAsync controller.

- Scheduler
- Remote Manager[6]
- Multiple Queue
- PostScript and PDF
- Streaming
- Accounting
- Scanning
- PPML
- Remote Service[6]
- Integrity Checker
- E-Shredding
- Advanced Color Management
- DocBox
- Page Programmer

6 Available later.

2.3.3 PRISMAsync Optional Software

This section describes software packages that are separately licensed for the PRISMAsync controller.

- DPLink
- Simplified Chinese Fontset
- Traditional Chinese Fontset
- Japanese Fontset
- Korean Fontset
- Advanced Imposition

IMPORTANT

- E-Shredding has an impact on product performance. Depending on the E-Shredding settings (number of overwrites) and the complexity of the processed job data, an impact of 10% to 40% can be expected on product performance.
- Starting with system software version 7.3, E-Shredding passes use a maximum of three (3) passes. With E-Shredding enabled, the disk space threshold is reduced to give operators more time to remove jobs before a “disk full” situation occurs.

NOTE

PRISMAprepare and Advanced Imposition are required to support the Perfect Binder-F1 with the PRISMAsync controller.

2.3.4 PRISMAsync System Backup

To backup the PRISMAsync system settings and licenses, a technician must use the USB key included in the PRISMAsync box.

To backup the PRISMAsync’s firmware, a technician must use a specific type of USB stick (available for purchase), as described in “USB Stick,” on p. 62.

The USB key and USB stick are the same types of physical hardware (flash drives); however, they are both used for different purposes.

It is strongly recommended that technicians make a backup of the system after installation, major system changes, or upgrades on the provided USB key.

The USB key must be left with the PRISMAsync controller.

2.3.5 PRISMAsync Firmware Updates

It is recommended that a technician use a specific kind of USB stick to upgrade or restore the PRISMAsync controller firmware. The USB stick is NOT included in the PRISMAsync box.

The USB stick used for upgrading the controller firmware must adhere to specific technical requirements. For the USB stick's technical requirements, see "USB Stick," on p. 62.

IMPORTANT

- Before downloading new firmware on the USB stick, the USB stick must be formatted (all contents on the stick erased). During the firmware update process, the current firmware on the PRISMAsync controller is erased and replaced by the newly installed firmware. Therefore, it is highly recommended that the technician backup the PRISMAsync system settings and licenses on the USB key first. Then, after the firmware is updated (using the USB stick), the installed licenses and settings can be restored using the USB key.
- Once the USB stick has been used to update firmware on the PRISMAsync controller, it cannot be used again until the format process is repeated.
- The USB key and USB stick should not be used interchangeably.
- Using a USB stick that does not meet the specific technical requirements, may result in an error when backing up the system settings or an error when installing firmware.

2.4 Notes on the Engine's Storage Drive

Always turn OFF the machine by activating the automatic shutdown sequence. For the imagePRESS V1000, the automatic shutdown sequence is initiated by turning OFF the main power switch. For more information, see the Canon imagePRESS V1000 User Manual. Never remove power during the shutdown sequence. This may negatively impact the performance and life of the engine's storage drive, and destroy any data being processed at the time of shut down.



IMPORTANT

Make sure to replace the solid state drive with Canon Genuine Service Parts (not store bought) at the same time. Canon U.S.A., Inc. does not guarantee operation if non-Canon Genuine Service Parts are used.

2.5 Customer-Defined Image Quality Adjustments and Recommendations

Customer-defined image quality adjustments enable the customer to enhance the productivity of the machine. There are several ways to maintain color consistency for each job. The recommendations below aim at reproducing optimal images under variable factors (i.e., changes in the environment).

To achieve the best image quality, these factors are recommended:

- Tighter control of the temperature and humidity results in tighter color consistency in the device.
- Maintain the device properly, which includes performing preventative maintenance, as scheduled.
- The customer can also maintain proper color calibration on the device by performing an Automatic Gradation Adjustment once a day. For optimal quality, the customer should perform an Auto Gradation Adjustment whenever a change in print quality is noticed and when dither pattern adjustments are made. It is strongly suggested that the customer use one media for the Automatic Gradation Adjustment daily. The media for optimal color control should be consistent with Hammermill 28 lb color laser paper.
- Some customers may want to incorporate a Color Management workflow that consists of not only the above, but also uses the Color and Imaging features included with a print controller.

  Best Practices: While working, Color Management must be implemented with consistency. This, along with a stable environment and a well-maintained system, makes the customer's ability to reproduce color more efficient.


IMPORTANT

After the machine is installed, setup, and adjusted to the customer's preferences, it is strongly recommended that owners of the imagePRESS V1000 print and store samples of the machine's image quality. These samples should serve as a benchmark, against which subsequent image quality can be referenced. Samples should be made by using as many applications, media, and paper types the owner intends to use on the imagePRESS V1000.

2.6 Unified Firmware Platform Overview

The UFP (Unified Firmware Platform) provides a common firmware base across all supported devices. This makes it possible to unify development, and reflect the same functions and the latest specifications across all supported devices.

UFP updates are performed on a regular basis, and include new specifications and enhancements. Critical bug fix firmware updates are released as needed.

The UFP offers the below features and benefits:

- Consistent firmware updates across the imagePRESS V1000 Series devices in your fleet.
- New features and error fixes are applied to all imagePRESS V1000 Series devices in your fleet at one time.

The latest UFP version is 3.13, and its features are described on the next page.

NOTE
The imagePRESS V1000 comes standard-equipped with UFP 3.13.

2.7 Unified Firmware Platform Features

The UFP has been designed for advanced functionality, high-reliability, and ease of operation. The UFP enables digital-business communications, such as imaging technology, cloud connectivity, and mobile solutions to work together.

The UFP V3.13 features include:

- **New Security Enhancements**
  - WPA3 Support
  - Two-Factor Identification using IC Card/PIN
  - Initial Password Change

- **FIPS 140.3 Storage Encryption** – Meets FIPS validation requirement of federal procurement agencies for Internet of Things products. Strengthens data encryption using AES-XTS 256.

Refer to the *imageRUNNER ADVANCE V3.13 System Service Manual* for details on all UFP V3.13 supported features.

2.8 Input and Output Accessories

The imagePRESS V1000 features many input and output accessories that enable customers who work in high-volume environments to complete large jobs directly from the machine. Unless mentioned otherwise, all accessories listed in the tables below, are optional. For more information on the input and output accessories that can be attached to the machine, see “Specifications,” on p. 58.

Input Accessories

- Multi-Drawer Paper Deck-E1 (x2)
- Duplex Color Image Reader-P1
- POD Deck Lite XL-A2
- POD Deck Lite-C1
- Stack Bypass-D1
- Stack Bypass Alignment Tray-D1

Finishing (Output) Accessories

- Two-Knife Booklet Trimmer-B1
- High Capacity Stacker-J1 (x2) (HCS Long Sheet Tray-A1 optional)
- Document Insertion Unit-R1
- Perfect Binder-F1 (Perfect Binder Continuous Kit-B1 optional)
- SDD Square Fold Booklet Maker with Two-Knife Trimmer
- GBC eWire Pro
- Finisher Long Sheet Catch Tray XL-B1
- Plockmatic Multi-Purpose Stacker (requires the High Capacity Stacker-J1, HCS Long Sheet Tray-A1, DFD PATH-B1 (H=860), and DFD Interface Kit-A1)
- Booklet Trimmer-G1
- Multi Function Professional Puncher-C1[7] (with Double Punch support[8])
- Staple Finisher-AF1/Booklet Finisher-AF1 with Inner Puncher (Long Sheet Feeding and Catch Tray-B1 or Long Sheet Catch Tray XL-B1 optional)
- Paper Folding Unit-K1
- SDD Square Fold Booklet Maker
- SDD BLM300C Professional Booklet Maker (requires the High Capacity Stacker-J1 or DFD Path Kit)
- Plockmatic BLM 50/35 Professional Booklet Maker (requires the High Capacity Stacker-J1 or DFD Path Kit with DFD Interface Kit)

7 OHP/transparencies and film cannot be punched or creased with the Multi Function Professional Puncher-C1. Bypass is supported.

8 The Double Punch feature must be enabled by a service technician for the PRISMAsync controller.

Advanced Automation Accessories

- Sensing Unit-B1
- Inspection Unit-B1

IMPORTANT

- 150 lb cover (400 g/m^2) paper can only be fed using the Multi-Drawer Paper Deck-E1, POD Deck Lite-C1, and the POD Deck Lite XL-A2. It can only be output to the High Capacity Stacker-J1 or the top tray of the Staple Finisher-AF1/Booklet Finisher-AF1. Pass through is supported on all other Canon-branded accessories.
- Staple, saddle stitch, and other finishing functions are not available for 150 lb cover (400 g/m^2) paper with the Staple Finisher-AF1/Booklet Finisher-AF1. Only output to the top tray is supported.

2.9 Storage Capabilities

The imagePRESS V1000 offers two built-in storage methods with flexible linkage to external systems for storing scanned documents and accessing stored files.

- Mail Box
- Network

IMPORTANT

- Canon U.S.A., Inc. is NOT responsible for any damages caused to user data that is stored on the hard disk drive of the machine. It is the customer's responsibility to create and maintain a data backup plan. Canon U.S.A., Inc. offers several security options to enhance document handling and storage security needs. See "System Options," on p. 31.
- It is strongly recommended to back up the data stored on the hard disk drive.

2.9.1 Mail Box

The Mail Box is a standard data storage area that stores and handles files for printing.

The Mail Box function enables users to store files that are scanned with this machine, or data sent from a personal computer via the printer driver. The stored files can be previewed or printed anytime using the desired settings. In addition, the file format of the scanned documents can be converted into another format, such as TIFF, PDF, and JPEG, to send via e-mail using the Send function. Up to 100 mailboxes can be used, and a name or password can be set for each mailbox.

2.9.2 Network

The imagePRESS V1000 is equipped with a collaboration function that enables them to be connected to imageRUNNER ADVANCE or imagePRESS Lite machines via the SMB/WebDAV protocol. When the machine is connected to other machines, a user can select an Advanced Box in an imageRUNNER ADVANCE or imagePRESS Lite (if it is on the network) to store files or print a file that is stored in another machine.

2.10 Security Features

The imagePRESS V1000 includes a comprehensive set of security features, such as Device Authentication, Device Security, Data Security, Document Security, and Network Security.

2.10.1 Device Authentication

- **Department ID Management** - Register a Department ID and password for each department, and manage the machine by limiting its use to only those who enter the correct Department ID and password. Department IDs and passwords for up to 1,000 departments can be registered. Use Department ID Management to keep track of the copy, scan, and print totals for each department. The following settings can be specified:
  - Turn Department ID Management ‘On’ or ‘Off’.
  - Register the Department ID and password.
  - Set page limits for scans, prints, and copies.
  - Set whether to use Department ID Management for the Mail Box, Send, and Network Scan functions. If the Copy function is specified, it is automatically restricted when Department ID Management is set.
  - Set up copy, scan, and print restrictions.
  - Create users automatically.

2.10.2 Device Security

The imagePRESS V1000 offers several ways to protect and secure the device, including.

- **Security Policy Function** – The security policy function is used to collectively configure the security-related settings into one security policy. These settings can be protected by a dedicated password to achieve a high-level of security.

  An Administrator can implement policy settings that comply with the security policies of his/her company in the devices under his/her charge to restrict people, other than the Administrator and end users, from using functions that do not comply with the policies, or from changing the setting values.

IMPORTANT

- Only an Administrator, who knows the security password, can disable the Security function or Service Mode password.
- Proper management and workflows are necessary for users who use the Security Policy function, and for machines that support this function.
- If an Administrator must log on to access the machine, it is necessary to notify the service technicians and the Call Center of support of these security policies, in case the Administrators or users forget their passwords. Therefore, a service technician must make an appointment with the Administrator, before a visit, so that the Security function can be disabled. Also, it is important to verify and establish a system to issue license keys.
- Users can also lock the Service Mode of the machine, and the Administrator must release it with their password.
- The passwords of the Administrator can be cleared from the Service Mode. However, if the Security Policy is set to restrict access to the Service Mode, then the Service Technician cannot clear passwords from the Service Mode. If the Administrator forgot his/her password, an HDD clear (clears many Settings/Registration settings and Service Mode settings) can be performed, or the Administrator can request a new password license from a local authorized Canon dealer. It is necessary to explain to the Administrator about the risk of any security policy specified, and request to manage the passwords.

2.10.3 Data Security

The imagePRESS V1000 offers several ways to protect and secure data. It is strongly recommended that a backup and security system is in place, along with an antivirus protection system to make sure that no data on the hard disk drives are lost, stolen, or compromised.

There are multiple security methods available from Canon U.S.A., Inc. that appropriately addresses a customer's need for securing data. If a customer has any data security concerns, please contact the dealer for more information.

1. Customer Accessible Initialization Function (Initialize All Data/Settings)
2. Standard Trusted Platform Module
3. Optional Memory Mirroring Kit
4. Standard Universal Send Security Features

⚠ CAUTION

Canon U.S.A., Inc. is not liable for any damages resulting from the loss or corruption of data. (See page 6 for further details.)

- **Initialize All Data/Settings Function (Standard)** – This setting is available in the Management Mode, to which the system administrator must authenticate. Performing this function, erases all user information on the storage drive of the machine (e.g., contact information, Mail Box data, network settings, and image data).

- **TPM (Trusted Platform Module) (Standard)** – The TPM (tamper resistant hardware) provides a facility for the secure generation of cryptographic keys, encrypts information stored on the internal storage drive, and decrypts information read from the internal storage drive. The public keys to encrypt confidential information are securely controlled by the TPM chip, and they can only be decrypted if the TPM releases the associated decryption key. If the storage drive is removed from the machine, it may be difficult to retrieve data off that storage drive since the encryption key for that data is stored in a separate location within the TPM.

⚠ CAUTION

Once the TPM setting is activated, if the end user fails to back up the TPM key, or if the end user loses the TPM key, it may result in permanent, unrecoverable data loss, for which Canon U.S.A., Inc. is not liable. (See page 6 for further details.)

IMPORTANT

- If the TPM setting is activated and the TPM chip fails, the confidential information stored on the chip can only be recovered if Canon's service representative replaces the TPM chip and restores the original TPM key to the new chip. Immediately, back up the TPM key on a USB memory stick, after the TPM setting is activated.
- Only the Administrator of the machine can back up the TPM key.
- For security reasons, the TPM key can only be backed up once. Store the USB memory with the backup data in a safe place.
- For the backup of the TPM key, it is recommended that a USB memory stick (supported system file: FAT32) with free space of 10 MB or more is used.
- The TPM seals the hardware components associated with the data, and the data cannot be accessed unless the specific TPM key is issued by the TPM chip. Therefore, setting the TPM mode to 'On', may affect service procedures and service costs (if not handled properly). It is strongly recommended that the Administrator who has access to the TPM key be present for all service calls to prevent the loss of data and productivity of the machine.

- **Memory Mirroring Kit (Optional)** – The Mirroring function provides redundancy when used with an additional storage drive of the same storage capacity. This preserves company data if one drive fails. For more information on the Memory Mirroring Kit, see “Memory Mirroring Kit,” on p. 34

- **Universal Send Security Features (Standard)** – The send security features enable the user to encrypt PDF and Digital Device Signature PDF/XPS files, as well as set a password to send them safely to a file server or e-mail address. The user can also enable the recipient of a PDF or Digital Device Signature PDF/XPS file to verify which device scanned the file.

2.10.4 Document Security

The imagePRESS V1000 offers document security modes to protect printed and distributed documents.

- **PDF Visible Digital Signature** – The PDF Visible Signatures mode enables the user to view the device signature and user signature on a PDF file. Visible digital signatures and user signatures are displayed on the first page of the PDF file to account for the origin of the document. The system administrator of the machine can set the Visible Signatures mode for all PDF documents or certain PDF documents created on the machine. This mode differentiates from the Digital Signature mode in that instead of having to access digital signature information from the document properties from the File menu, this information is displayed prominently on the first page of the document in the background, and is printed along with the document data, thereby deterring improper distribution of sensitive documents.

- **Adobe LiveCycle Rights Management ES Server Integration** – Adobe LiveCycle enables Administrators to set automatic document privileges and apply security policies by creating Policy Protected PDF files on the machine, even after document creation, using the Adobe LiveCycle Rights Management ES Server. Once a Policy Protected PDF document is created on the machine with this feature enabled, the PDF extension in Adobe Reader, upon attempt by a user to open a protected PDF, contacts the Rights Management Server to check the latest authorized users, expiration, auditing, and watermarking policies set by the administrator. These latest policies are then enforced by that application to ensure the information in that document remains secure.

IMPORTANT

- To generate a PDF linked with Adobe LiveCycle Rights Management ES Server, the Adobe LiveCycle Rights Management ES Server must be licensed, pre-configured by a system administrator, and the machine must be connected to the Intranet or Internet.
- Encrypted PDF and PDF/A-1b documents are not compatible with Adobe LiveCycle Rights Management ES Server.

2.10.5 Network Security

The imagePRESS V1000 secures network communications by using IP Address filters using the imagePRESS server, and encryption and authentication.

- **IP Address Filters** – IP Address Filter performs a function similar to many firewalls. It permits or rejects incoming packets from an IP address or ranges of IP addresses.

- **Encryption and Authentication** – TLS (Transport Layer Security) protects data transferred over the network by encrypting file names and formats. The System Administrator can also add IPSec capabilities to secure Internet Protocol (IP) communications from lower layer protocols, such as TCP (Transmission Control Protocol) and UDP (User Datagram Protocol) by authenticating and encrypting each IP packet of a data stream across the Internet.

  Additionally, the imagePRESS V1000 supports IEEE 802.1X, which provides port-based authentication. Authentication involves communications between a supplicant, authenticator, and authentication server. The supplicant is authentication software on a client device. The client device (the imagePRESS V1000) needs the supplicant to provide credentials, such as user names/passwords or digital certificates, to the authenticator (a wireless access point). The authenticator then forwards the credentials to the authentication server (generally a RADIUS database) for verification. If the credentials are valid in the authentication server database, the client device is allowed to access resources located on the protected side of the network.

3. System Options

The functionality of the imagePRESS V1000 can be expanded by installing system related optional accessories. This section describes the system related optional accessories and their functions.

3.1 Copy and Print Options

3.1.1 imagePRESS D3000 Controller

The imagePRESS V1000 can be controlled by EFI's imagePRESS Server D3000 Controller. The EFI controller for the imagePRESS V1000 includes the following features:

- **APPE 5.5 Support** – Performance improvements using the Adobe PDF Print Engine
- **Process Adobe Photoshop PSD/PSB** – Reduce risk of quality loss due to conversion.
- **Fiery Job Expert** – Show operators what settings were updated and why.
- **Health Monitor Improvements** – Checks if the server needs OS updates; checks available space on the server main (C:) drive.
- **Spot Color Overprint** – Overlapping spot colors can blend together.
- **Security Audit Logs** – Monitor the server behavior and collect logs.
- **Improved Security** – Enhanced encryption methods and protocols.
- **JDF Performance and Security Improvements** – Increased JDF ticket time by 5% to 10% (over B6000).
- **Fiery Preflight Pro** – Verify file compliance against industry standards, and view warnings and error messages in an interactive report.

The following table lists the imagePRESS Server D3000 options/utilities availability.

Option/Utility	imagePRESS D3000 Server
Fiery Compose + Impose	Standard
Fiery Command Workstation 6	Standard
Fiery JDF	Standard
Graphic Arts Pro License	Optional
Removable HDD	Optional
Operator Attention Light	Optional
Integrated Interface and Stand	Optional
Fiery Job Master	Optional
Fiery Color Profiler Suite	Optional
Fiery Job Flow	Optional
Adobe Acrobat Pro 2020	Optional

3.1.2 Media Librarian

Enables a user to configure and register paper types and assign registered paper types to paper sources. A user can install this application on the optional imagePRESS Server D3000 at no extra charge from the e-Support Website.

3.2 Universal Send Features

All of the send features listed below are standard on the imagePRESS V1000.

3.2.1 Color Universal Send

Color Universal Send Kit enables the user to send scanned documents via e-mail or I-fax, as well as send scanned data to be stored in file servers or User Inboxes.

A URL Send feature enables scanned documents to be stored on the device while it sends only the URL of the document to a recipient for retrieval. This eliminates electronic jams and full e-mail inboxes.

3.2.2 Universal Send PDF Advanced Features

The Universal Send PDF Advanced Features enables the user to make Compact PDF, Trace & Smooth, and Searchable PDF files.

3.2.3 Universal Send PDF Security Features

The Universal Send PDF Security Features[9] enables the user to encrypt PDF files and set a password to send them safely to a file server or e-mail address. It also enables the recipient of the PDF file to verify which device scanned it.

9 Not available with the PRISMAsync controller.

3.3 Data Security and Wireless Options

3.3.1 480 GB SSD Kit-A1

Use the optional 480 GB SSD-A1 with the Memory Mirroring Kit-A1 for data redundancy.

3.3.2 Memory Mirroring Kit-E1

The Memory Mirroring Kit-E1 provides redundancy when utilized with an additional storage drive of the same storage capacity. This maintains system uptime and preserves company data in the instance of a storage drive failure.

NOTE

The engine storage drive and the storage drive used for mirroring must be of the same storage capacity.

3.4 Accessibility Options

3.4.1 ADF Access Handle-A1

Attaches to the Automatic Document Feeder to enable seated users to open the document feeder.

3.5 Advanced Automation Options

The Advanced Automation Modules assist with routine tasks and post-print quality assurance.

3.5.1 Inspection Unit-B1

The Inspection Unit-B1 examines every page for dust, stains, streaks, and other flaws. Flawed pages can then be automatically reprinted. A separate workstation compares the inspected page image to a baseline original. Operators can define up to 64 priority zones on each page, with each zone having nine possible levels of sensitivity.

IMPORTANT

- Sensitivity levels six through nine (most sensitive) should only be used with high quality paper on well-maintained and thoroughly-cleaned machines. Specifying high sensitivity in other situations causes a significantly higher number of rejections and reprints due to stray dust or debris.
- Zone specification applies only to identification of spots and streaks. Registration detection is set to within 5mm of the page edge, regardless of the zone setting.

The Inspection Unit can also verify barcodes, QR codes, and a subset of alphanumeric and symbol form data for accuracy. The Inspection Unit reads the printed data and compares it against a source spreadsheet (CSV format) for accuracy. Pages with incorrect data are discarded and reprinted. The workstation saves the inspection history logs in separate CSV files for later analysis and comparison.

IMPORTANT

- Only capital letters and a subset of special characters (symbols) can be analyzed. The letter “O” is excluded from analysis.
- Spaces are discarded during inspection. You must enter inspection strings without spaces. For example, to inspect “red candy”, enter it as “REDCANDY”.
- Only OCR A/B fonts in black text on a white background are supported.
- Only one form field item can be inspected in a line. Inspection does not support multiple fields. For example, “StateZip” can be an inspection source, but “StateZip StateName” cannot be an inspection source.

The Inspection Unit cannot be combined with the Perfect Binder[10], Multi Function Professional Puncher[10], or GBC eWire[10].

10 With the imagePRESS D3000 controllers, the Perfect Binder, Multi Function Professional Puncher, and GBC eWire accessories can be attached, but inspection mode is not available when configured with the Inspection Unit. With the PRISMAsync controller, the Perfect Binder, Multi Function Professional Puncher, and GBC eWire cannot be attached when configured with the Inspection Unit.

3.5.2 Sensing Unit-B1

The Sensing Unit-B1 can automatically adjust and monitor front-to-back registration and color accuracy before and during production. Adjustments are made during printing, so the imagePRESS can maintain productivity. The Sensing Unit-B1 can also complete front-to-back registration and color adjustments from the local user interface, saving time for the operator.

3.6 PRISMAdirect

PRISMAdirect is a workflow management solution designed for in-plant print centers, print shops and commercial printers to manage order intake, facilitate order management, help reduce overhead costs and enable faster turnaround time. PRISMAdirect includes an order management dashboard and an optional Webshop module to enable higher productivity.

3.7 Remote Operator Software

The Remote Operator Software allows a user to operate the imagePRESS V1000 control panel via a computer from a remote location.

4. Machine Dimensions and Space Requirements

4.1 Dimensions

The following table includes the approximate width, depth, and height dimensions (in inches and millimeters) of the main unit and optional accessories.

Unit	Width		Depth		Height	
Main Unit[11] **w/o Operation Panel**	62.3”	1,583 mm	34.3”	872 mm	40.9”	1,040 mm
PRISMAsync Controller	7.9”	200 mm	16.9”	430 mm	16.5”	420 mm
imagePRESS Server D3000 Controller	9.3”	235 mm	18.2”	464 mm	20.7”	527 mm
Duplex Color Image Reader Unit-P1	25.7”	653 mm	23.3”	593 mm	8.6”	219 mm
POD Deck Lite-C1[12]	28.2”	717mm	27”	686 mm	22.4”	570 mm
POD Deck Lite XL-A2[12]	43.5”	1,105 mm	27”	686 mm	22.4”	570 mm
Multi-Drawer Paper Deck-E1[13]	38”	965 mm	31.5”	800 mm	42.5”	1,080 mm
Multi Function Professional Puncher-C1	17.5”	445 mm	31.3”	795 mm	40.9”	1,040 mm
Perfect Binder-F1	36.3”	922 mm	31.1”	791 mm	51.2”	1,300 mm
Perfect Binder Continuous Kit-B1[14]	16.4”	417 mm	24.6”	625 mm	10.3”	262 mm
Staple Finisher-AF1	31.5”	800 mm	31.2”	792 mm	48.8”	1,239 mm
Booklet Finisher-AF1	31.5”	800 mm	31.2”	792 mm	48.8”	1,239 mm
High Capacity Stacker-J1[15]	35.4”	899 mm	29.3”	745 mm	44.9”	1,141 mm
Booklet Trimmer-G1	82.5”	2,095 mm	31.1”	790 mm	40.9”	1,040 mm
Two-Knife Booklet Trimmer-B1	21.1”	536 mm	30.3”	770 mm	40.9”	1,040 mm
Document Insertion Unit-R1	29.4”	746 mm	31.2”	793 mm	55.4”	1,407 mm
Paper Folding Unit-K1	13.2”	336 mm	31.2”	793 mm	46.9”	1,190 mm
DFD Adapter and Bridge	35.8”	910 mm	29.2”	743 mm	46.8”	1,190 mm
SDD Square Fold Booklet Maker	43.3”	1,100 mm	14.2”	360 mm	45”	1,140 mm
SDD Square Fold Booklet Maker with Two-Knife Trimmer	62.6”	1,592 mm	27.6”	700 mm	51”	1,300 mm

11 The Marking Engine, Fixing Station, and Power Supply Unit all make up what is hereinafter referred to as the “Main Unit.”
12 Dimensions when not connected to the engine.
13 Width listed is with the deck connected to the engine. When standalone, width is 39” (990 mm).
14 The Perfect Binder Continuous Kit-B1 is installed inside of the Perfect Binder and does not add to the footprint of or space occupied by the Perfect Binder unit.
15 Depth when stack tray is ejected is 49.2” (1,250 mm).

Dimensions (cont'd)

Unit	Width		Depth		Height	
SDD BLM300C Professional Booklet Maker	35.8"	910 mm	27.6"	700 mm	45.3"	1,150 mm
SDD Front Trimmer BLT6989	14.2"	360 mm	23.6"	600 mm	43.3"	1,100 mm
SDD 2-Knife Trimmer STR6702	23.6"	600 mm	27.6"	700 mm	43.3"	1,100 mm
SDD Square Fold SFM6904	14.2"	360 mm	23.6"	600 mm	43.3"	1,100 mm
SDD Rotator RTM6940	26.8"	680 mm	26.4"	670 mm	43.3"	1,100 mm
SDD Long Belt Stacker BST6800	61.8"	1,570 mm	17.7"	450 mm	29.9"	760 mm
SDD Short Belt Stacker BST6900	32.3"	820 mm	17.7"	450 mm	29.9"	760 mm
Plockmatic BLM 50/35[16,17]	57.9"	1,470 mm	28.8"	730 mm	41.4"	1,050 mm
Trimmer FTR50	14.2"	360 mm	28.8"	730 mm	41.4"	1,050 mm
Cover Feeder CF50	12.2"	310 mm	7.5"	190 mm	20.9"	530 mm
Booklet Fold BF50	14.2"	360 mm	28.8"	730 mm	41.4"	1,050 mm
Rotate Crease Trimmer BCT50	28.0"	710 mm	52.5"	1,333.5 mm	42.5"	1,080 mm
High Capacity Belt Stacker BST4000-1	70.5"	1,791 mm	20.5"	521 mm	Adjustable	
GBC eWire Pro	42.5"	1,079 mm	35.9"	911 mm	31.7"	805 mm
Plockmatic Multi-Purpose Stacker	35.4[18]:	900 mm[18]	26.8"	680 mm	41.8"	1,060 mm
Inspection Unit-B1	9.8"	250 mm	31.2"	792 mm	40.9"	1,040 mm
Sensing Unit-B1	20.3"	515 mm	29.5"	750 mm	48.3"	1,228 mm

16 Includes the optional Belt Stacker and Cable Protector.
17 The Belt Stacker, installed after the BLM50 or BLM35, Booklet Fold Module, or Trimmer, adds approximately 16.5" to 24.8" (420 mm to 630 mm) to the system length. The cable protector adds approximately 3.5" (90 mm) to the depth of the system.
18 Extends to 55" (1,410 mm) for long sheets.

4.2 Weight

The approximate weights of the main unit, feeder, and finishing options (in pounds and kilograms) are listed in the table below.

Unit	Weight	
Main Unit	903.9 lb	410 kg
PRISMAsync Controller	35.3 lb	16 kg
imagePRESS Server D3000 Controller	37.5 lb	17 kg
Duplex Color Image Reader Unit-P1	50.7 lb	23 kg
POD Deck Lite-C1	168 lb	76 kg
POD Deck Lite XL-A2	249.1 lb	113 kg
Multi-drawer Paper Deck-E1	392.4 lb	178 kg
Multi Function Professional Puncher-C1	224.9 lb	102 kg
Perfect Binder-F1	679 lb	308 kg
Perfect Binder Continuous Kit-B1	20 lb	9 kg
Staple Finisher-AF1	286.6 lb	130 kg
Booklet Finisher-AF1	396.8 lb	180 kg
Puncher Unit-BS1	6.6 lb	3 kg
High Capacity Stacker-J1	265 lb	120 kg
Booklet Trimmer-G1[19]	392 lb	178 kg
Two-Knife Booklet Trimmer-B1[19]	320 lb	145 kg
Document Insertion Unit-R1[20]	135 lb	61 kg
Paper Folding Unit-K1	157 lb	71 kg
DFD Adapter and Bridge	167.6 lb	76 kg
SDD Square Fold Booklet Maker	157 lb	71 kg
SDD Square Fold Booklet Maker with Two-Knife Trimmer	573 lb	260 kg
SDD BLM300C Professional Booklet Maker	363.8 lb	165 kg
SDD Front Trimmer BLT6989	187.4 lb	85 kg
SDD 2-Knife Trimmer STR6702	451.9 lb	205 kg
SDD Square Fold SFM6904	143.3 lb	65 kg
SDD Rotator RTM6940	286.6 lb	130 kg
SDD Long Belt Stacker BST6800	55 lb	25 kg
SDD Short Belt Stacker BST6900	44 lb	20 kg
Plockmatic BLM50/BLM35	341.7 lb	155 kg
Trimmer FTR50	150 lb	68 kg
Cover Feeder CF50	17.6 lb	8 kg
Booklet Fold BF50	117 lb	53 kg
Rotate Crease Trimmer BCT50	463 lb	210 kg
Belt Stacker BST4000-1	154 lb	70 kg
GBC eWire Pro	500 lb	226 kg
Plockmatic MPS Lift Unit	157 lb	71 kg
Plockmatic MPS Docking Unit	11 lb	5 kg
Inspection Unit-B1	109 lb	49.5 kg
Sensing Unit-B1	221.6 lb	100.5 kg

19 Includes conveyor and output tray.
20 Includes the Inserter Option Controller Kit-A1.

4.3 Installation and Service Space

The installation site must provide enough space for unrestricted operation, maintenance work, and proper ventilation. The machine dimensions are in diagrams on the following pages. Every attempt should be made to install the equipment in a room that allows for the proper servicing and maintenance of the equipment, and ensures that issues, such as ventilation, odors, and dust accumulation are not a concern.

IMPORTANT

- Keep the back of the machine at least 31.5” (800 mm) away from a wall if the optional Paper Folding Unit-K1, Multi Function Professional Puncher-C1, or Document Insertion Unit-R1 is attached.
- Make sure that approximately 39 3/8” (1,000 mm) or more space is left around the front, left, and right sides of the machine for the proper servicing of the equipment.
- The floor must be level (with no bows) and flat for the stabilization and support of the machine.
- The machine should not be moved once it is in place.
- The minimum doorway opening that the machine passes through prior to installation must be at least 32” wide.
- The minimum elevator depth used to transport the machine prior to installation must be at least 56”.

4.3.1 Minimum Space Requirements to Transport the Machine and Turn Hallway Corners

The following table represents the minimum width that is necessary to turn hallway corners and transport the machine to its final installation site.

Equipment	Dimensions When Transporting (Width x Depth)	Minimum Corridor Width Required
Main Station	29 “ x 34 3/8” (739 mm x 872 mm)	62 3/8” (1,585 mm)
Fusing Station	40 1/4" x 30 5/8” (1,020 mm x 778 mm)	67 5/8” (1,717 mm)
POD Deck Lite-C1	25” x 27” (633 mm x 686 mm)	56 3/8” (1,433 mm)
Multi Drawer Paper Deck-E1	39 “ x 31 1/2" (990 mm x 800 mm)	69 7/8” (1,773 mm)
Multi Function Professional Puncher-C1	17 1/2” x 31 3/8” (445 mm x 795 mm)	55 5/8” (1,411 mm)
Perfect Binder-F1	36 3/8” x 31 1/8” (922 mm x 791 mm)	67 1/2" (1,715 mm)
Staple Finisher-AF1	31 1/2” x 31 x 1/4” (800 mm x 792 mm)	64” (1,626 mm)
Booklet Finisher-AF1		
High-Capacity Stacker-J1	35 3/8” x 29 3/8” (899 mm x 745 mm)	65 5/8” (1,668 mm)
Document Insertion Unit-R1	32 3/8” x 31 1/4" (823 mm x 793 mm)	64 5/8” (1,643 mm)
Paper Folding Unit-K1	19 3/4" x 31 1/4" (502 mm x 793 mm)	56 5/8” (1,439 mm)
Two-Knife Booklet Trimmer-B1	21 1/8” x 30 3/8” (536 mm x 770 mm)	56 5/8” (1,439 mm)
Booklet Trimmer-G1	72 1/4" x 31 1/8” (1,835 mm x 790 mm)	98 3/8” (2,498 mm)

NOTE

The Marking Engine, Fixing Station, and Power Supply Unit are transported separately.

4.3.2 Installation Space Diagrams

The approximate installation space requirements may differ, depending on how the machine is configured and the optional accessories attached.

NOTE

There must be enough space around the machine. The following diagrams show the minimum dimensions; whenever possible, make sure there will be more space than indicated.

Standard (Minimum) Configuration

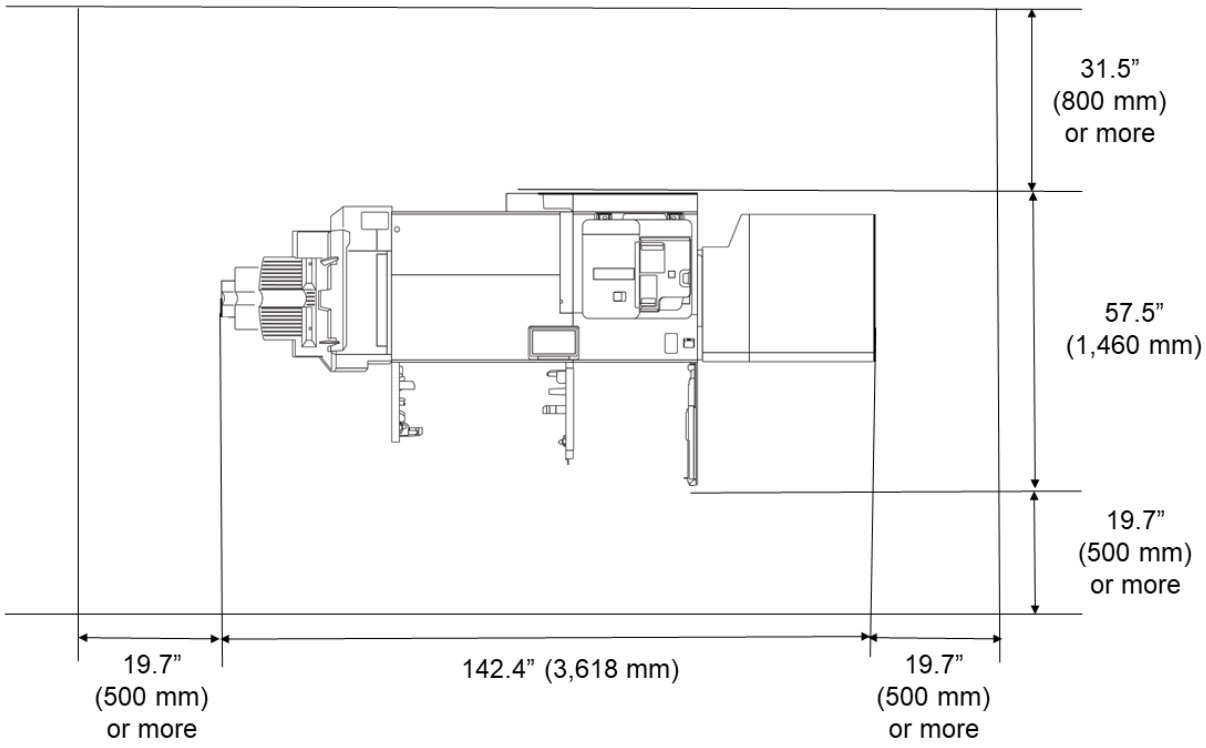

The Standard (Minimum) Configuration includes the imagePRESS V1000 main engine, Booklet Finisher, and Multi-Drawer Paper Deck.

Large Configuration

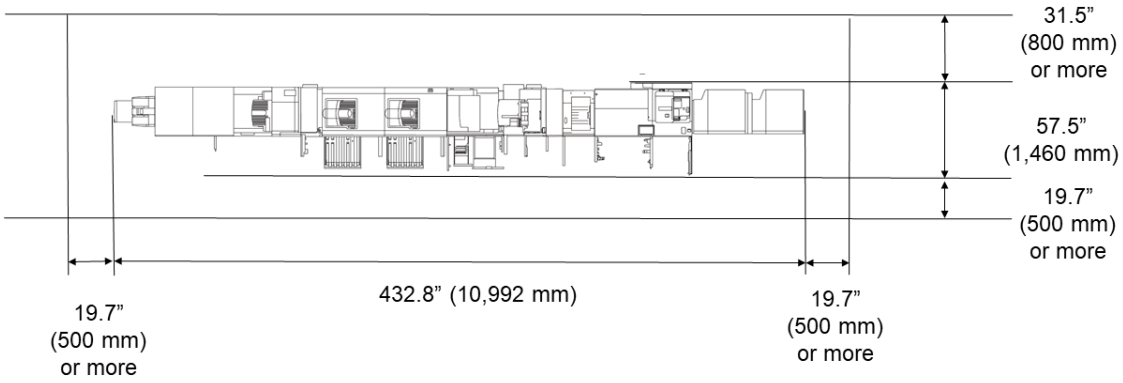

The large configuration includes the imagePRESS V1000 engine, Two-Knife Booklet Trimmer, Two-Knife Booklet Trimmer Conveyor, Booklet Trimmer, Booklet Finisher, Paper Folding Unit, High Capacity Stacker, High Capacity Stacker, Perfect Binder, Multi Function Professional Puncher, Document Insertion Unit, Inspection Unit, Sensing Unit-B, Multi-Drawer Paper Deck, Paper Deck Path Kit, and Multi-drawer Paper Deck.

IMPORTANT

- The fully configured width of the machine includes opening space for the POD Deck door and the extended tray of the Two-Knife Booklet Trimmer.
- There is approximately 1/5” (5 mm) of space between each of the following attached accessories: Two-Knife Booklet Trimmer-B1, Booklet Trimmer-G1, Staple Finisher-AF1, Booklet Finisher-AF1, Paper Folding Unit-K1, Perfect Binder-F1, Document Insertion Unit-R1, Multi-Drawer Paper Deck-E1, Secondary Multi-Drawer Paper Deck-E1, POD Deck Lite-C1, Multi Function Professional Puncher-C1, and High Capacity Stacker-J1.

imagePRESS Server D3000

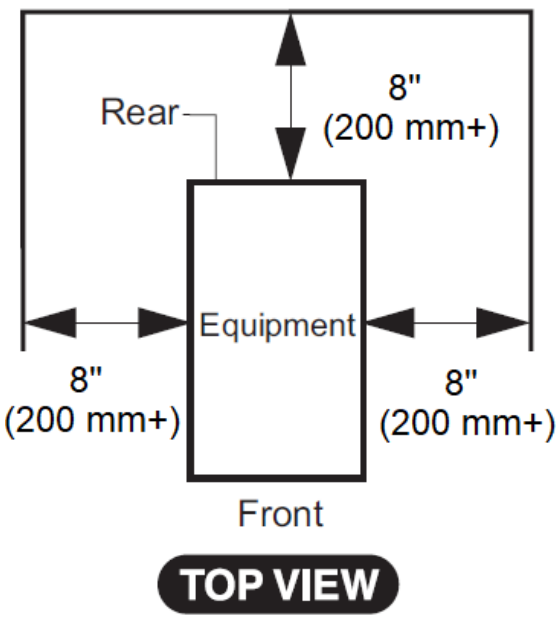

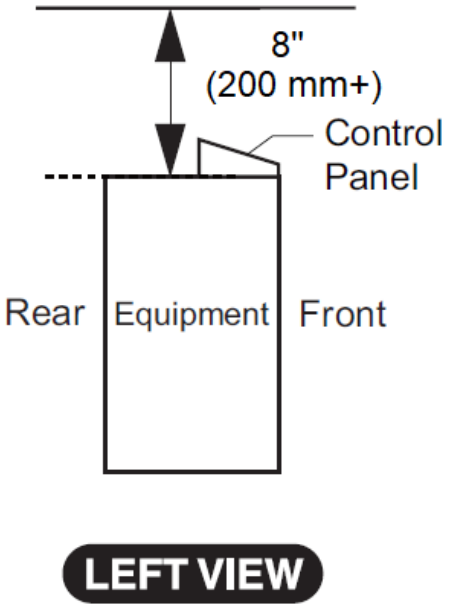

Plockmatic BLM 50/35 With the High Capacity Belt Stacker in an L-Shape

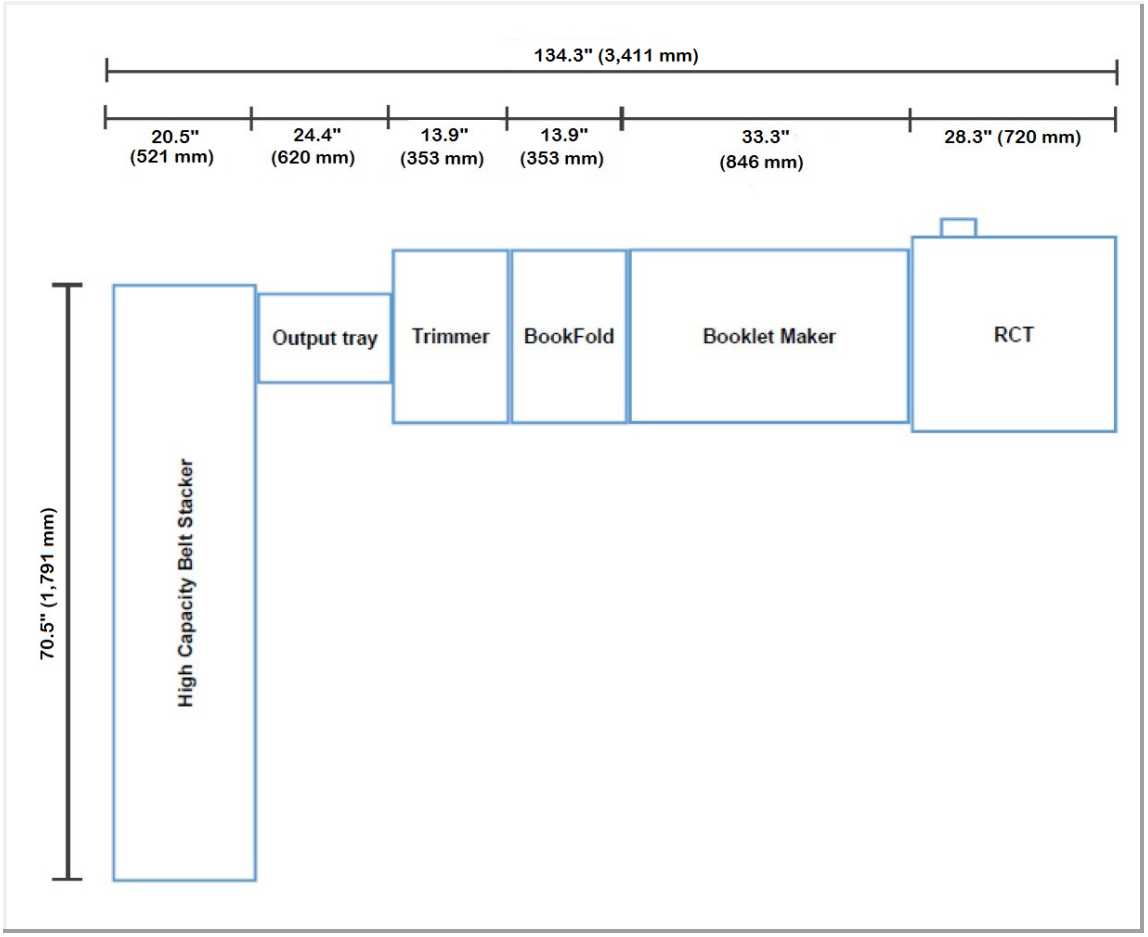

With the High Capacity Belt Stacker In-Line

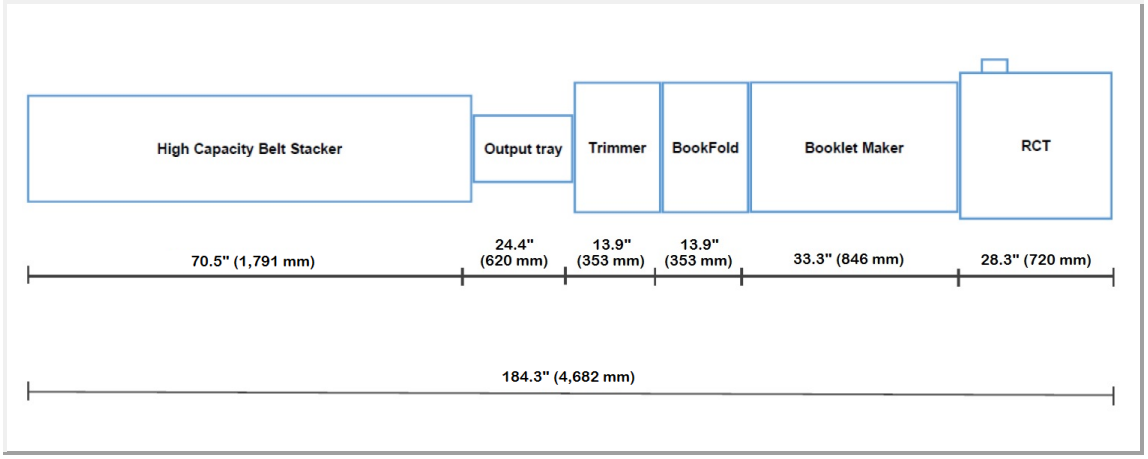

Perfect Binder Continuous Kit-B1 Installation and Maintenance Space

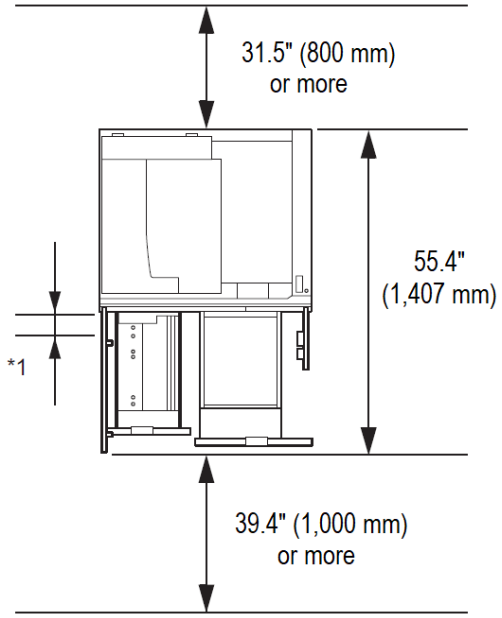

*1 When installing the other equipment in front of the Continuous Kit, locate the equipment 2.4” (60 mm) or more away from the front cover of the Continuous Kit. The Continuous Kit may otherwise not open in case of paper jam.

Installation Order of Finishing Options

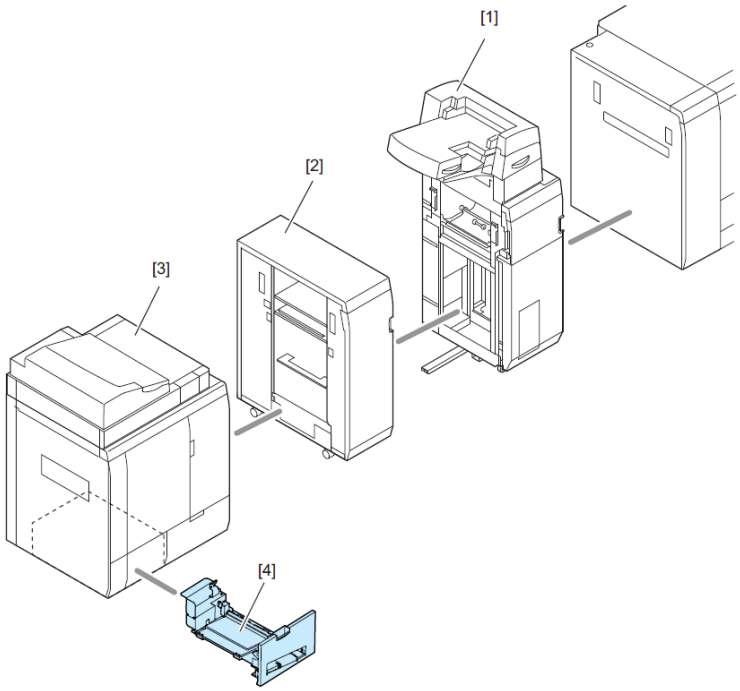

[1] Document Insertion Unit	[3] Perfect Binder
[2] Multi Function Professional Puncher	[4] Perfect Binder Continuous Kit

Inspection Unit-B1 Installation and Maintenance Space

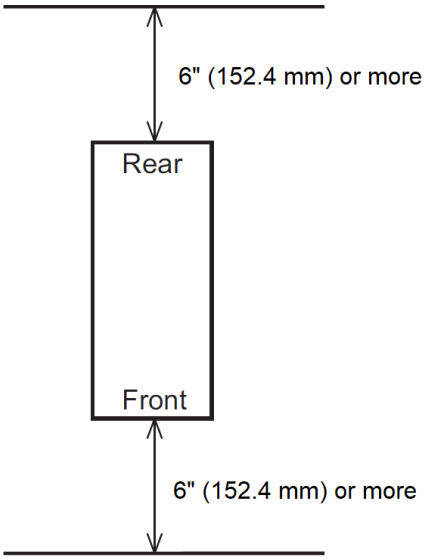

4.4 Recommended Floor Space Requirements

For the large configuration of the imagePRESS V1000, it is recommended that there be at least 39.3.1’ (W) x 9’ (D) of level floor space.

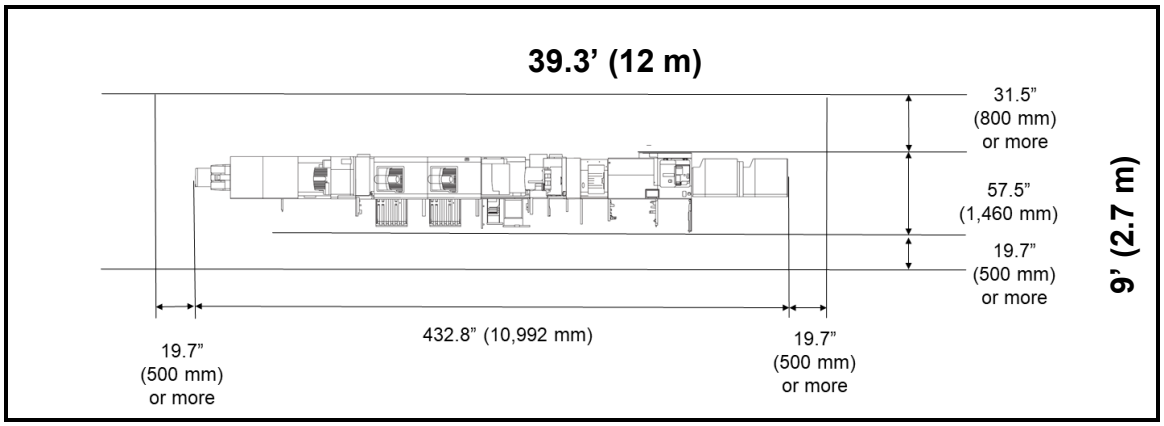

IMPORTANT

- The imagePRESS V1000 was created to be modular in design. Floor space, budget, monthly copy/print volume, and applications will determine which configuration works best.
- Some type of finishing option (Saddle Finisher, Finisher, or High Capacity Stacker) is required.
- The optional SDD Square Fold Booklet Maker with Two-Knife Trimmer is not shown in the configuration diagrams above. If the SDD Square Fold Booklet Maker with Two-Knife Trimmer is attached to the machine, make sure that there is approximately 41.2” (1,046 mm) of space added to the installation space and floor design.
- The SDD BLM300C Professional Booklet Maker requires the High Capacity Stacker-J1, has several options that enhance the booklet maker’s finishing system, such as a 2-knife trimmer and square fold device, and the BLM300C finishing system must be the final in-line accessory attached to the machine.
- The Plockmatic BLM 50/35 Professional Booklet Maker requires the High Capacity Stacker-J1.

4.5 Floor Structure Requirements

The floor on which this machine is installed must have strength of at least 92.2 lb/ft^2 (450 kg/m^2). If the floor does not have this level of strength, consult a building contractor before installing the machine.

The weight of the machine is distributed on the floor through the adjusters and wheels. Do not install the machine on an unstable floor or platform.

4.6 Potential System Configurations

The figure below describes the possible configuration options that can be attached to the imagePRESS V1000.

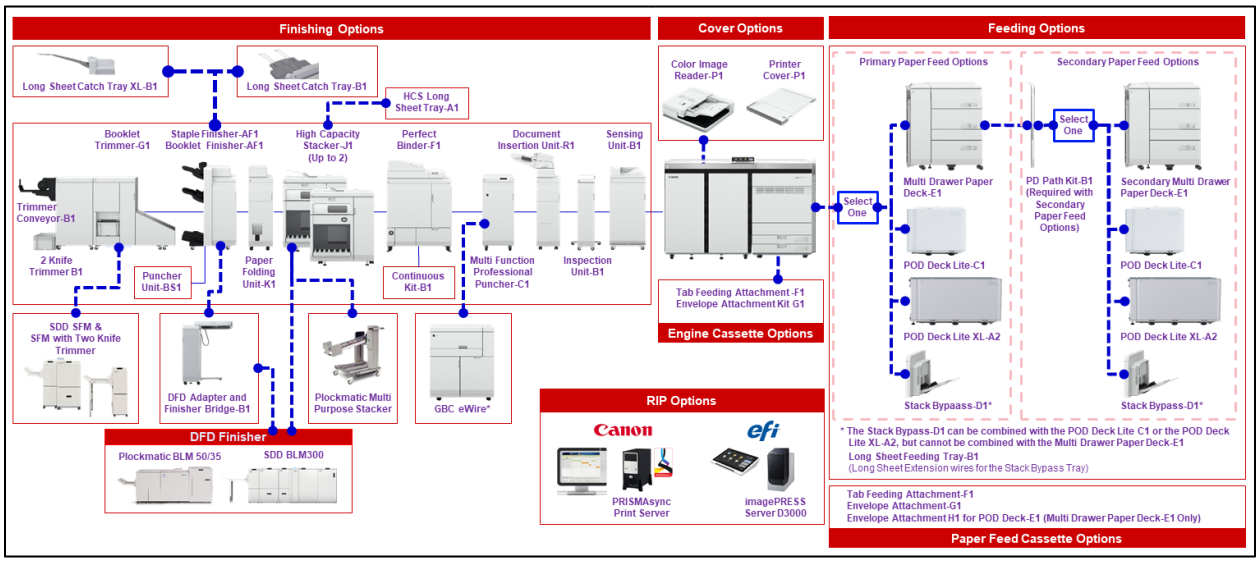

5. Power/Electrical Requirements

The imagePRESS V1000 requires two (2) NEMA 6-20 receptacles.

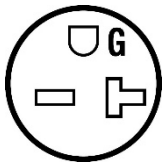

NEMA 6-20 Receptacle

The Perfect Binder-F1 requires a NEMA 6-15 receptacle.



NEMA 6-15 Receptacle

The PRISMAsync controller, imagePRESS Server D3000 controller, POD Deck Lite-C1, POD Deck Lite XL-A2, Multi-Drawer Paper Deck-E1, Multi Function Professional Puncher-C1, Staple Finisher-AF1, Booklet Finisher-AF1, High Capacity Stacker-J1, Two-Knife Trimmer-A1, Document Insertion Unit-R1, SDD Square Fold Booklet Maker, SDD Square Fold Booklet Maker with Two-Knife Trimmer, SDD BLM300C Professional Booklet Maker, SDD Rotator RTM6940, Plockmatic BLM 50/35 Booklet Maker, Rotate Crease Trim Module, BST-4000-1 Belt Stacker module, Plockmatic Multi-Purpose Stacker, Inspection Unit-B1, Inspection Unit Workstation, and Sensing Unit-B1 require a NEMA 5-15 receptacle.



NEMA 5-15 Receptacle

5.1 Power Requirements for the Main Unit and Optional Accessories

Part or Accessory	Power Supply	Power Supply Cord/Plug Specifications	Length of Power Cord
Main Unit	2 200-240V/20A outlet	NEMA 6-20	6.6” (2 m) each
PRISMAsync Controller w/Operation Panel and Attention Light	1-120 V/15 A outlet	NEMA 5-15	13.9’ (4.2 m)
imagePRESS Server D3000 Controller	1-120 V/15 A outlet	NEMA 5-15	6’ (1.8 m)
Duplex Color Image Reader-P1	From the main unit	—	—
POD Deck Lite-C1	1-120 V/15 A outlet	NEMA 5-15	6.6’ (2 m)
POD Deck Lite XL-A2	1-120 V/15 A outlet	NEMA 5-15	6.6’ (2 m)
Multi-Drawer Paper Deck-E1	1-110 V/7 A outlet	NEMA 5-15	8.5’ (2.6 m)
Multi Function Professional Puncher-C1	1-120 V/15 A outlet	NEMA 5-15	6’ (1.8 m)
Perfect Binder-F1	1-208V/15 A outlet	NEMA 6-15	8.5’ (2.6 m)
Perfect Binder Continuous Kit-B1	From the Perfect Binder	—	—
Staple Finisher-AF1	1-120 V/15 A outlet	NEMA 5-15	6.6’ (2 m)
Booklet Finisher-AF1	1-120 V/15 A outlet	NEMA 5-15	6.6’ (2 m)
High Capacity Stacker-J1	1-120 V/15 A outlet per stacker	NEMA 5-15	13.8’ (4.2 m)
Booklet Trimmer-G1	From the finisher	—	—
Two-Knife Trimmer-B1	1-120 V/15 A outlet	NEMA 5-15	6.6’ (2 m)
Document Insertion Unit-R1	1-120 V/15 A outlet	NEMA 5-15	6.6’ (2 m)
Paper Folding Unit-K1	From the finisher	—	—
SDD Square Fold Booklet Maker	1-120 V/15 A outlet	NEMA 5-15	6’ (1.8 m)
SDD Square Fold Booklet Maker with Two-Knife Trimmer	1-120 V/15 A outlet	NEMA 5-15	6’ (1.8 m)
SDD BLM300C Professional Booklet Maker	1-120 V/15 A outlet	NEMA 5-15	6’ (1.8 m)
SDD Rotator RTM6940	1-120 V/15 A outlet	NEMA 5-15	6’ (1.8 m)
SDD Front Trimmer BLT6989	From the SDD BLM300C Professional Booklet Maker	—	—
SDD 2-Knife Trimmer STR6702			
SDD Square Fold SFM6904			
SDD Long Belt Stacker BST6800			
SDD Short Belt Stacker BST6900			

Power Requirements (cont'd)

Part or Accessory	Power Supply	Power Supply Cord/Plug Specifications	Length of Power Cord
Plockmatic BLM50/BLM35[21]	1-100-230V (±10%) AC, 50-60 Hz	NEMA 5-15	6' (1.8 m)
Trimmer FTR50	From the Plockmatic BLM50/BLM35 Professional Booklet Maker	—	—
Cover Feeder CF50			
Booklet Fold BF50			
Rotate Crease Trimmer BCT50	1-100-230V (±10%) AC, 50-60 Hz	NEMA 5-15	6' (1.8 m)
High Capacity Belt Stacker BST4000-1	1-100-240V (+6%, -10%) AC, 50-60 Hz, 1A	NEMA 5-15	6' (1.8 m)
Plockmatic Multi-Purpose Stacker	1-100-240V AC, 50/60 Hz, 2A	NEMA 5-15	
Inspection Unit-B1[22]	1-100-240V AC, 50/60Hz, 1.4A	NEMA 5-15	6.2' (1.9 m)
Sensing Unit-B1	1-100-240V AC, 50/60Hz, 2.5A	NEMA 5-15	6.2' (1.9 m)

IMPORTANT

- Phase converters and step-down transformers are not supported.
- We recommend an additional standard 115 V/15 A receptacle for service tools, such as a laptop computer or vacuum that may be used when servicing or configuring the machine.
- Use only dedicated and properly grounded receptacles for the main unit and imagePRESS Servers.
- Do not use extension cords. The ground connection serves to provide the internal electronics with a reference voltage. Faulty or poor ground sources will cause this reference voltage to fall into a range that no longer serves as a reliable reference voltage. The internal logic and programming of the imagePRESS V1000 will not perform reliably because there is an insufficient difference between the internal operating signal voltages and the poor ground reference signal. A qualified electrician can measure and provide the ground source that the imagePRESS V1000 or any computer controlled office equipment requires.
- Before installation, confirm that all necessary receptacles are available.

21 Canon USA strongly suggests that the power receptacle for the BLM 50/35 Professional Booklet Maker is connected to a separate breaker from the power receptacle for the Rotator Module. This is necessary to maintain adequate current for the Professional Booklet-Maker and each of the modules.

22 Also requires two 120-127 V AC, 60Hz power outlets for Inspection Tool (Workstation) and Monitor.

6. Environmental Factors and Requirements

This section describes the necessary environmental factors and requirements in which the machine should be operated to achieve the best image quality and print results.

NOTE
It may be necessary to use a humidifier or dehumidifier to attain the proper humidity levels for optimal machine performance.

6.1 Temperature and Humidity Conditions

The optimal humidity range is 15% to 60% RH (Relative Humidity) with a room temperature of 68°F to 80.6°F (20°C to 27°C). Make sure to maintain a constant temperature and humidity within this range. Otherwise, there is a risk that productivity, paper feeding, image quality, and reliability may be affected if the machine is operated outside of these guidelines.

The machine should not be installed in locations with significant shifts in temperature or humidity. Areas containing water, or equipment that can significantly alter room temperature or humidity, such as a space heater, stove, or portable air conditioner, should be avoided.

The optimal humidity range for storing paper is 15% to 60% RH (Relative Humidity) with a room temperature of 68°F to 80.6°F (20°C to 27°C). Storing paper in a location that does not meet these specifications may affect paper feeding and image quality. For example, if the humidity is too high, paper curling and paper jams will increase. If the humidity is too low, paper may shrink or lose resistance, and toner will not adhere to the paper as well.

Only use paper that has fully acclimatized to the environment in which the machine is installed. Using paper that has been stored in a different environment (with a different temperature and humidity), may cause paper jams or result in poor print quality.

6.2 Temperature Gradient

If a sudden temperature change occurs, this may have an adverse effect on image positioning. Sudden temperature changes may cause the paper to bend or contract, cause the machine to malfunction, and form condensation. Every effort should be made to maintain consistent temperature and humidity levels in the operating environment at all times for the imagePRESS V1000.

6.3 Ventilation

Ensure that there is an air exchange rate of at least 2 times per hour, and at least 3,885 ft^3 (110 m^3) of space in the location where the machine will be installed.

This machine generates a slight amount of ozone during normal use. Although sensitivity to ozone may vary, this amount is not harmful. Ozone may be more noticeable during extended use or long production runs, especially in poorly ventilated rooms. It is recommended that the room be appropriately ventilated, sufficient to maintain a comfortable working environment, in areas of machine operation.

6.4 Elevation Limitations

Install this machine at an elevation below 13,123’ (4,000 m) and at an air pressure less than 607.8 hPa.

6.5 Lighting

We recommend installing the machine in a location with at least 500 lux (29 1/2” (75 cm) above the floor) for normal operation and maintenance.

6.6 Sunlight

Avoid installing the machine in direct sunlight. Direct sunlight has adverse effects on toner consistency and image quality. If direct sunlight is unavoidable, use curtains to shade the machine. Be sure that the curtains do not block the machine’s ventilation slots or louvers, or interfere with the electrical cord or power supply.

6.7 Ammonia

Avoid installing the machine where ammonia is emitted. In a sufficient amount, ammonia will attack the surfaces of the machine’s paper feed and image quality components, thereby shortening their useful life and increasing the need for periodic and remedial maintenance.

A professional assessment of the air quality in the room in which the machine is to be installed is recommended prior to its installation.

7. Specifications

This chapter explains the specifications of the main unit and optional accessories.

The specifications provided are approximate values, for reference only, and are subject to change without notice for product improvement or future release.

7.1 Main Unit

Item	Specifications
Name	Canon imagePRESS V1000
Type	Console
Drum	Photosensitive OPC Drum x 4
Color Supported	Full Color
Print Resolution	Up to 2,400 dpi x 2,400 dpi
Reading Resolution	Up to 600 dpi x 600 dpi
Number of Gradations	256
Memory	6 GB
Storage Drive	480 GB SSD
Required Equipment	• PRISMAsync or imagePRESS Server controller • One of: High Capacity Stacker, Finisher-AF1, or Saddle Finisher-AF1 • One of: Color Image Reader-P1 or Printer Cover-P1 • Tab Feeding Attachment if feeding Index paper
Paper Size/Weight/Type	Size: 13” x 19”, 12” x 18”, LGL, LTR, LTRR, STMTR, EXEC, and Custom Size (3.9” x 5.8” to 13” x 51.2” (100 mm x 148 mm to 330.2 mm x 1,300 mm)) Weight: 14 lb bond to 150 lb cover (52 to 400 g/m^2) Type: Thin, Recycled, Plain, Heavy, Color Paper, Tab, Transparency, Bond, Pre-punched, Letterhead, Postcard, Envelope, Label, Postcard, Embossed, Vellum
Margin	Top Margin: 0.2” (4 mm) Left and Right Margins: 0.1” (2.5 mm) Bottom Margin: 0.2” (4 mm)
Warm-Up Time	After Powering ON: Fewer than 6 minutes Returning from the Sleep mode: Fewer than 6 minutes Activation time may vary, depending on the conditions under which the machine is being used. (In all cases, at a room temperature of 68°F.)
First Output Time	Approximately 20 seconds
Maximum Imageable Area	Non-long sheet: 12.3” x 18.9” (313 mm x 479.7 mm) Long Sheet: 12.3” x 50.9” (313 mm x 1,292 mm)
MEAP Support	No

Main Unit (cont'd)

Item	Specifications	
Copy/Print Speed, Simplex (except when paper is fed from the optional Long Sheet Tray)	13" x 19"	Approximately: 50 sheets/minute (14 lb bond to 81 lb cover (52 to 220 g/m^2)) Approximately: 37 sheets/minute (81 to 95 lb cover (221 to 256 g/m^2))
	12" x 18"	Approximately: 50 sheets/minute (14 lb bond to 81 lb cover (52 to 220 g/m^2)) Approximately: 39 sheets/minute (81 to 95 lb cover (221 to 256 g/m^2))
	LGL	Approximately: 63 sheets/minute (14 lb bond to 81 lb cover (52 to 220 g/m^2)) Approximately: 50 sheets/minute (81 to 95 lb cover (221 to 256 g/m^2))
	LTR	Approximately: 101 sheets/minute (14 lb bond to 81 lb cover (52 to 220 g/m^2)) Approximately: 82 sheets/minute (81 to 95 lb cover (221 to 256 g/m^2))
	LTRR	Approximately: 83 sheets/minute (14 lb bond to 81 lb cover (52 to 220 g/m^2)) Approximately: 64 sheets/minute (81 to 95 lb cover (221 to 256 g/m^2))
	EXEC	Approximately: 101 sheets/minute (14 lb bond to 81 lb cover (52 to 220 g/m^2)) Approximately: 82 sheets/minute (81 to 95 lb cover (221 to 256 g/m^2))
	The copy/print speeds above may not be achieved if the user copies/prints in the conditions below: • If different paper types are used at the same time • If different paper sizes are used at the same time • If copying/printing as one- and two-sided documents at the same time. For example, the main document is copied/printed as one-sided, and the cover and sheet insertions are copied/printed as two-sided while bookbinding.	

Main Unit (cont'd)

Item	Specifications
Paper Feeding System/ Capacity	Up to 1,100 sheets x 2 paper decks (20 lb bond (80 g/m^2))
Multiple Copies	1 to 9,999 sheets
Front-to-Back Registration	For up to long sheet: Up to 0.7 mm feed Up to 0.7 mm cross feed 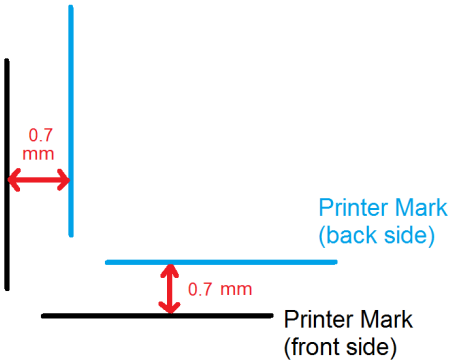 Illustration depicts standard size media.
Power Source	200-240V (60Hz) 20A x 2
Maximum Power Consumption	Approximately 6 kW
Noise	Printing: Approximately 84 dB or less
Dimensions (W x D x H)	62.3" x 34.3" x 40.9" (1,583 mm x 872 mm x 1,040 mm)
Weight	Approximately 903.9 lb (410 kg)
Installation Space (W x D)	For minimum configuration, which includes Multi-Drawer Paper Deck and Finisher: 240.7" x 124.5" (6,113 mm x 3,162 mm) For large configuration, which includes Multi-Drawer Paper Deck, POD Deck, Document Insertion Unit, Multi Function Professional Puncher Perfect Binder, High Capacity Stacker (x 2), Paper Folding Unit, Saddle Finisher, Booklet Trimmer, and Two-Knife Booklet Trimmer: 492.8" x 124.5" (12,518 mm x 3,162 mm)
Altitude	13,123' (4,000 m (607.8 hPa)) maximum
Temperature while in Use	68 to 80.6°F (20 to 27°C)
Humidity	15 to 60% RH

7.2 PRISMAsync Controller

Item	Specifications
Server Type	External
Operating System	Windows 10 LTSC embedded 64 bit
Processor	Intel Core i7 8700
GPU	NVidia GT1030
Memory	16 GB (2 x DDR4-2400 8 GB)
Hard Disk	1 x 500 GB 2.5” HDD 1 x 1 TB 3.5” HDD
Interface(s)	2 x Ethernet 10/100/1000 Base-T Ethernet 2x USB 3.0 (Front) 6x USB 3.0 (Back)
Interface Engine	Engine side: Canon Interface Board-G1 Print server side: Océ Interface board DDI06
Security	TPM 2.0 module (FIPS compliant for security and encryption)
Power Source	100-240V, 10-5A, 50-60Hz
Size (H x W x D)	16.5” x 7.9” x 16.9” (420 mm x 200 mm x 430 mm)
Weight	35.3 lb (16 kg)

7.2.1 USB Stick

Item		Specifications				
USB Connection Speed		USB 3.0				
USB Stick Size		≥ 32 GB recommended				
Bootable Media Support		Yes (Mandatory)				
File System Support		Bootable NTFS and FAT32 (Intel)				
Drivers		Windows generic drivers for USB mass storage. No specific drivers or specific setup.				
Bios Recognition		USB HDD device				
USB Stick Technology		SLC (Single Level Cell) (Mandatory)				
Encryption		No hardware data encryption software on the USB stick is allowed.[23]				
U3 Support		Not allowed.				
Biometric Support		Not allowed.				
Micro-Drive		Not allowed.				
Ready Boost Certified		Yes (Mandatory)				
Minimal Throughputs	**File Size**	512 B	32 KB	256 KB	2 MB	64 MB
	Read	1.5 MB	8 MB	20 MB	23 MB	24 MB
	Write	0.1 MB	0.8 MB	4 MB	4 MB	8 MB
Housing		Rubber housing (shock resistant) is preferred.				
LCD Screen		Not allowed.				
Activity Indication LED		Yes				
Tested & Supported USB Sticks[24]		• ADAT UE700 USB3.0 32GB (1070108051) • Transcend JetFlash 810 USB3.0 32GB (1070118340).				
Minimum Manufacturer Warranty		5 years				

23 Encryption software on the USB stick is allowed only if it is possible to automatically format the stick (e.g., with the Format command), and does not involve any additional human action.

24 USB sticks that have not been tested cannot be used.

7.3 imagePRESS Server D3000 Controller

Item	Specifications
Platform	NX Pro Gen III
System	FS500 Pro
CPU	Intel Core i7-8700 3.4GHz with Turbo
Fonts	PS: (Roman)138 Fonts
Memory	16 GB (2 x 8 GB)
Storage Drive	1 x 240 GB SATA SSD 1 x 1 TB SATA HDD
Direct Print Format	PDF1.7, EPS, TIFF6, JDF1.4/JMF
Interface Ports	2x Ethernet (1000Base-T/100-Base-TX/10Base-T) 5x USB 3.2 ports (2 rear, 3 front on Fiery QuickTouch 2x USB 2.0 ports (rear)
Power Use	Approximately 350 W (maximum) Approximately 100 W (typical)
VDP	FreeForm v1, v2.1, PPML, PDF/VT-1, PDF/VT-2, Creo VPS
Operating System	Microsoft Windows 10 IoT Enterprise 2019 LTSC
Dimensions (W x D x H)	9.3” x 18.2” x 20.7” (235 mm x 463.3 mm x 527 mm)
Weight	37.5 lb (17 kg)

7.4 Multi-Drawer Paper Deck-E1

Item		Specifications
Required Equipment		• Paper Deck Connection Kit if connecting to POD Deck Lite or POD Deck Lite XL • Tab Feeding Attachment if feeding Index paper
Paper Specifications[25]	**Size**	Paper: 13" x 19", 12" x 18" , 11" x 17", LGL, LTRL, LTR, EXECL, STMT, Custom (5 1/2" x 7 1/8" to 13" x 19 1/4" (139.7 mm x 182 mm to 330.2 mm to 487.7 mm) Envelopes[26] [27] Monarch, COM10, DL, ISO-C5
	Weight	Upper/Middle Deck: 14 lb bond to 130 lb cover (52 to 350 g/m^2)) Lower Deck: 14 lb bond to 148 lb cover (52 to 400 g/m^2))
	Type	Thin, Plain, Heavy, Color, Recycled, Pre-Punched, Transparency, Coated, Textured, Labels, Bond, Tab, Envelopes, Postcard, and Letterhead
Paper Deck Capacity		Upper and Middle Drawer: 1,500 sheets (20 lb bond (80 g/m^2)) each 1,650 sheets (17 lb bond (64 g/m^2)) each Lower Drawer: 2,000 sheets (20 lb bond (80 g/m^2)) 2,200 sheets (17 lb bond (64 g/m^2))
Power Source		110 V – 127 V, 50/60 Hz, 7 A
Maximum Power Consumption		Approximately 1,000 W
Dimensions (W x D x H)[28]		39" x 31 1/2" x 42 1/2" (990 mm x 800 mm x 1,080 mm)
Weight		Approximately 392.4 lb (178 kg)

25 For more details on supported paper weights and types, see "Media Feed Locations," on p. 119.
26 Requires the Envelope Feeder Attachment-G1.
27 Envelopes supported only in the middle (Monarch, COM10, DL, ISO-C5) and lower (COM10, DL, ISO-C5) drawers.
28 Width listed is when standalone. Width when connected to the engine is 38" (965 mm).

7.5 POD Deck Lite-C1

Item	Specifications
Required Equipment	• POD Deck Lite Attachment Kit • Paper Deck Connection Kit if connecting to Multi-Drawer Paper Deck
Restricted Equipment	Not compatible with POD Deck Lite XL-A2
Paper Feeding Method	Retard and air assist method
Paper Sizes	A3S, A4L, A4S, B4S, B5L, B5S, 13” x 19”, 12” x 18”, 11” x 17”, LGLS, LTRL, LTRS, EXEL, EXES, SRA3 Custom: 7.2” x 7.2” (182 mm x 182 mm) - 13" x 19.2" (330.2 mm x 487.7mm)
Paper Materials	Uncoated Paper (16 lb bond - 148 lb cover (60 - 400 g/m^2)) Coated Paper (18 lb bond - 130 lb cover (70 - 350 g/m^2)) , Recycled paper, Color paper, OHP/ Transparency, Label, Film, Textured paper, Bond paper, Pre-punched paper, Vellum paper, Tab Paper
Tray Capacity	3,500 sheets (20 lb bond, 80 g/m^2) 3,660 sheets (20 lb bond, 75 g/m^2)
Power Source	120 – 127 V AC, 60 Hz, 2.2 A
Maximum Power Consumption	480 W
Dimensions (W x D x H)	28.2” x 27.0” x 22.4” (717 mm x 686 mm x 570 mm)
Weight	Approximately 167.6 lb (76 kg)

7.6 POD Deck Lite XL-A2

Item	Specifications
Required Equipment	• POD Deck Lite Attachment Kit • Paper Deck Connection Kit if connecting to Multi-Drawer Paper Deck
Restricted Equipment	Not compatible with POD Deck Lite-C1
Paper Feeding Method	Roller separation and air assist
Paper Sizes	13” x 19”, 12” x 18”, 11” x 17”, LGL, LTR, LTRR, EXEC, STMT Custom 5.5” x 7.1” to 13” x 19.2” (139.7 mm x 182 mm to 330.2 mm x 487.7 mm) Long Sheet 11” x 19.2” to 13” x 30” (279mm x 487 mm to 330.2 mm x 762 mm)
Paper Materials	Thin paper 16 lb bond - 20 lb bond (60 - 79 g/m^2)), Plain paper (20 lb bond - 28 lb bond (80 - 105 g/m^2)), Recycled paper, Color paper、Thick paper (28 lb bond - 106 lb bond (106 – 400 g/m^2)), Coated paper (28 lb bond – 93 lb bond ((106 – 350 g/m^2)), Embossed, Vellum, Bond, OHP, Transparency, Translucent, Label, Pre-punched paper, Index, Postcard Long sheets up to 300 g/m^2
Tray Capacity	3,500 sheets (20 lb bond, 80 g/m^2) 3,660 sheets (20 lb bond, 75 g/m^2)
Power Source	120 – 127 V AC, 60 Hz, 2.2 A
Maximum Power Consumption	480 W
Dimensions (W x D x H)	43.5” x 27” x 22.6” (1,105 mm x 686 mm x 574 mm)
Weight	Approximately 249.1 lb (113 kg)

7.7 Long Sheet Catch Tray XL-B1

Item	Specifications
Description	Includes long-sheet extension tray, attaches to Staple Finisher-AF1/Booklet Finisher-AF1, allows for higher capacity catching of long sheets.
Output Capacity	In the Staple Finisher-AF1/Booklet Finisher-AF1 top tray: Up to 30” (762 mm): Approximately 300 sheets (20lb bond) Up to 51.2” (1,300 m): Approximately 10 sheets (20lb bond)

7.8 Tab Feeding Attachment-F1

Item	Specifications
Paper Size	LTR
Paper Capacity	2 3/8” (60 mm) in height (or 300 to 400 sheets)
Weight	Approximately 0.2 lb (0.1 kg)

7.9 Stack Bypass-D1

Item	Specifications
Required Equipment	Paper Deck Connection Kit-B1 if connected to the Multi-Drawer Paper Deck
Paper Size	13” x 19”, 12” x 18”, 11” x 17”, LGL, LTR, LTRR, EXECR, STMT, Post Card (including double and four card) Custom: 3.9” x 5.8” to 13” x 19.2” (100 x 148 mm to 330.2 x 487.7 mm) Long: 8.3” x 19” to 13” x 51.2” (210 x 487.3 mm to 330.2 x 1,300 mm) Envelope: COM10, Monarch, DL, ISO-C5 Custom Envelope: 3.8” x 5.8” to 13” 19.2” (98 x 148 mm to 330.2 x 487.7 mm)
Paper Type	Thin, Plain, Recycled, Thick, Color, Transparency, ,Label, Postcard, Envelope, Embossed, Bond, Pre-punched, Letterhead, Vellum, Tab
Paper Weight	14 lb bond to 130 lb cover (52 to 350 g/m^2)
Paper Capacity	Approximately 250 sheets (LTR, 20 lb bond) Approximately 1 coated sheet (larger than 487.8 mm))
Width	Approximately 13.3” (338 mm) Fully Extended: Approximately 18” (458 mm)
Power Source	From engine

7.10 Duplex Color Image Reader-P1

Item		Specifications
Tray Capacity		200 sheets (20 lb bond (80 g/m^2))
Features		Double Feed Detection
Scan Speed	**300 dpi**	2-sided: Black-and-White: Up to 270 ipm Color: Up to 270 ipm 1-sided: Black-and-White: Up to 135 ipm Color: Up to 135 ipm
	600 dpi	2-sided: Black-and-White: Up to 160 ipm Color: Up to 90 ipm 1-sided: Black-and-White: Up to 80 ipm Color: Up to 80 ipm
Supported Paper Sizes		11” x 17” R, LGLR, LTR, LTRR, STMT, STMTR
Supported Paper Weights		13 lb bond to 81 lb cover (50 g/m^2 to 220 g/m^2)
Dimensions (W x D x H)		25.7” x 23.3” x 8.6” (653 mm x 593 mm x 219 mm)
Weight		Approximately 50.7 lb (23kg)

7.11 High Capacity Stacker-J1

IMPORTANT

The High Capacity Stacker-J1 does not support envelope sizes smaller than 5.5” x 7.2” (such as COM10 and Monarch), even in pass-through (bypass) mode.

Item		Specifications
Paper Sizes	**Bypass**	5.5” x 7.2” to 13” x 51.2” (139.7 mm x 182 mm to 330.2 mm x 1300 mm)
	Top Tray	5.5” x 7.2” to 13” x 51.2” (139.7 mm x 182 mm to 330.2 mm x 1300 mm)
	Stack Tray	5.5” x 7.2” to 13” x 19.2” (139.7 mm x 182 mm to 330.2 mm x 487.7 mm)
Paper Weight		All media supported by main engine
Stack Capacity		Approximately 6,200 sheets maximum, including the top tray, 20 lb bond (80 g/m^2)
Power Source		90 – 264 V AC, 47-63 Hz, 10 A
Maximum Power Consumption		220W
Dimensions (W x D x H)		35.4” x 29.3” x 44.9” (899 mm x 745 mm x 1,141 mm)[29]
Weight		Approximately 697 lb (120 kg)

29 Depth is 49.2” (1,250 mm) when stack tray is ejected. Width is 44.1” (1,121 mm) and height is 49.6” (1,260 mm) when the High Capacity Stacker Long Sheet Tray is attached.

7.12 Staple Finisher-AF1/Booklet Finisher-AF1

Item		Specifications
Restricted Equipment		Staple Finisher-AF1 and Booklet Finisher-AF1 cannot be installed at the same time
Paper Specifications[25]	**Size**[30] [31]	13” x 19”, 12” x 18”, 11” x 17”, LGL, LTR, LTRR, EXEC, STMTR, Custom Size (4” x 5 7/8” to 13” x 19 1/4" (100 mm x 148 mm to 330.2 mm x 487.7 mm)) Envelope: COM10, Monarch, ISO-C5, DL, Custom (6” x 9”, 9” x 12”, 10” x 13”) Long Sheet: 8.3” x 19.2” to 13” x 51.2” (210 mm x 487 mm to 330.2 mm x 1,300 mm) Z-Fold: 11” x 17”, LGLS, LTRR Double Fold: LTRR
	Weight	14 lb bond to 147 lb cover (52 to 400 g/m^2)
	Type	Thin, Plain, Heavy, Color, Recycled, Pre-Punched, Transparency, Film, Labels, Tab, Bond, Letterhead, Coated, Textured, Vellum, Postcard, and Synthetic

25 For more details on supported paper weights and types, see “Media Feed Locations,” on p. 121.

IMPORTANT

- Envelopes can ouly be output to Tray A.
- Longer sheet sizes can only be output to Tray A. To use longer sheet sizes, set the output destination on the machine to ‘Tray A’. For instructions, see the e-Manual that came with your machine.

30 Long sheets, from 30” to 51.2”, may require someone to manually input sheets into the engine and retrieve the printed sheets from the finisher.

31 If the optional Long Sheet Catch Tray XL-B1 or Long Sheet Feeding and Catch Tray-B1 is attached, the paper size can go from 3 7/8” x 5 7/8” to 13” x 51.2” (98 mm x 148 mm to 330.2 mm x 1,300 mm).

Staple Finisher-AF1/Booklet Finisher-AF1 Table Continued

Item	Specifications
Capacity Per Tray[32]	**No Collating, Collate, or Group Mode** Tray A: 1,000 sheets 21 lb bond/80 g/m^2 Envelope: 150 sheets (5.1" or 130 mm in height) Z-Folded (11" x 17"): 30 sheets Double-Folded (LTRR): 50 sheets Long Paper (When the Long Sheet Tray is attached, 18.9" to 30" (478.8 mm to 762 mm)): 17 lb bond to 21 lb bond (64 to 79 g/m2): 100 sheets 22 lb bond to 40 lb bond (80 to 150 g/m2): 50 sheets 56 lb cover to 110 lb cover (151 to 300 g/m2): 25 sheets 110 lb cover to 130 lb cover (300 to 350 g/m2): 20 sheets Long Paper (When the Finisher Long Sheet Catch Tray is attached, 18.9" to 30" (478.8 mm to 762 mm)): 17 lb bond to 40 lb bond (64 to 79 g/m2): 300 sheets 56 lb cover to 110 lb cover (151 to 300 g/m2): 150 sheets 110 lb cover to 130 lb cover (300 to 350 g/m2): 120 sheets Long Paper (When the Finisher Long Sheet Catch Tray is attached, 30" to 51.2" (762.1 mm to 1,300 mm)): 10 sheets Tray B: If the High Volume Stack mode is set to 'Off' (up to 21 lb bond (80 g/m^2)): LTR and EXEC: 2,000 sheets (or 11 1/4" (285 mm) in height) 13" x 19", 12" x 18", 11" x 17", LGL, LTRR: 1,000 sheets (or 5 3/4" (147 mm) in height) If the High Volume Stack mode is set to 'On'[33]: LTR and EXEC: 4,000 sheets (or 19 1/4" (490 mm) in height) LTRR: 2,000 sheets (or 11 1/4" (285 mm) in height) 11" x 17" and LGL:[34] 1,500 sheets (or 8 1/2" (216 mm) in height) Coated: 1,000 sheets (or 5 3/4" (147 mm) in height) 13" x 19" and 12" x 18":[34] 1,000 sheets (or 5 3/4" (147 mm) in height) **Staple Mode** Tray B:[35] LTR and EXEC: 200 sets (or 16 5/8" (423 mm) in height) LTRR: 200 sets (or 11 1/4" (285 mm) in height) 11" x 17" and LGL: 200 sets (or 8 1/2" (216 mm) in height) Z-Folded: 30 sheets accumulated

32 To stack 2,000 sheets or more (LTR paper), use Tray B first, and then use Tray A.
33 The maximum stack volume may vary, depending on the paper type.
34 Extra large and some of coated media are supported in service mode.
35 Maximum height for coated is 5.8" (147 mm).

Staple Finisher-AF1/Booklet Finisher-AF1 Table Continued

Item	Specifications
Maximum Stapling Capacity/Available Staple Size	When the Standard Staple Cartridge Is Attached: (The maximum stapling capacity may vary, depending on the paper type and weight.) LTR, EXEC • Uncoated 100 sheets 14 to 21 lb bond (52 to 80 g/m^2) 80 sheets 21 to 22 lb bond (80 to 81.4 g/m^2) 60 sheets 22 to 28 lb bond (81.5 to 105 g/m^2) 20 sheets 28 to 53 lb bond (105 to 200 g/m^2) 53 lb bond (200 g/m2) is only for front and back cover • Coated 50 sheets 19 to 22 lb bond (70 to 81.4 g/m^2) 40 sheets 22 to 28 lb bond (81.5 to 105.9 g/m^2) 10 sheets 28 to 53 lb bond (106 to 200 g/m^2) 53 lb bond (200 g/m2) is only for front and back cover 11” x 17”, LGL, LTRR • Uncoated 50 sheets 16 to 22 lb bond (60 to 81.4 g/m^2) 30 sheets 22 to 28 lb bond (81.5 to 105 g/m^2) 10 sheets 28 to 53 lb bond (105 to 200 g/m^2) 53 lb bond (200 g/m2) is only for front and back cover • Coated 30 sheets 19 to 28 lb bond (70 to 105.9 g/m^2) 10 sheets 28 to 53 lb bond (106 to 200 g/m^2) 53 lb bond (200 g/m2) is only for front and back cover When covers are more than 80 lb bond (300 g/m2) and body sheets are gloss coated paper, the body sheet capacity is reduced by 10 sheets.
Available Saddle Stitch Capacity[36]/Size for Booklet Finisher	Saddle Stitch (including 1 cover sheet) • Uncoated 2-25 sheets 16 to 21 lb bond (60 to 80 g/m^2) 2-15 sheets 21 to 28 lb bond (80 to 105 g/m^2) 2-5 sheets 28 to 56 lb bond (105 to 209 g/m^2) 2-4 sheets 56 to 58 lb bond (209 to 220 g/m^2) • Coated 2-10 sheets 19 to 34 lb bond (70 to 128 g/m^2) 2-5 sheets 34 to 56 lb bond (128 to 209 g/m^2) 2-4 sheets 56 to 58 lb bond (210 to 220 g/m^2) Saddle Folding 5 sheets (16 lb bond to 77 lb cover (60 g/m^2 to 209 g/m^2)) 1 sheet (77 lb cover to 111 lb cover (210 g/m^2 to 300 g/m^2)) Size: 13” x 19”, 12” x 18”, 11” x 17”, LGL, LTRR, Custom Size (8 1/4" x 11” to 13" x 19 1/4” (210 mm x 279.4 mm to 330.2 mm to 487.7 mm)) Weight of Cover Sheet: Must be the same or heavier paper weight as the main document (14 lb bond to 110 lb cover (52 to 300 g/m^2)).
Power Source/Maximum Power Consumption	100V AC, 50/60 Hz, 10 A Approximately 500 W
Dimensions (W x D x H)[37]	31 1/2" x 31 1/4” x 48 3/4" (800 mm x 792 mm x 1,239 mm)
Weight	Staple Finisher: Approximately 287 lb (130 kg) Booklet Finisher: Approximately 397 lb (180 kg)

36 The available saddle stitch capacity may vary, depending on the paper type and weight.
37 When the Binding Auxiliary Tray is fully open, the Staple Finisher width is 35” (890 mm) and the Booklet Finisher width is 41.7” (1,060 mm).

7.13 Puncher Unit-BS1

Item	Specifications
Required Equipment	One of: Finisher-AF1, Saddle Finisher-AF1
Hole Punching System	Press punch system
Number of Holes/Diameter	2 holes: 3/8" (8 mm) 3 holes: 3/8" (8 mm)
Distance Between Holes	2 holes: 2 3/4" (70 mm) 3 holes: 4 1/4" (108 mm)
Paper Size Support	2 holes: 11" x 17", LGL, LTR-R, LTR, EXEC, Custom size (182 mm x 182 mm – 297 mm x 432 mm) 3 holes: 11" x 17", LTR, EXEC, Custom size (240 mm x 182 mm – 297 mm x 432 mm)
Paper Weight Support	14 lb bond to 110 lb cover (52 g/m^2 to 300 g/m^2) Note: maximum weight for coated paper is 110 lb index (209 g/m^2)
Punch Waste Tray Capacity	Approximately 6,000 sheets (20 lb bond, 80 g/m^2)
Productivity	100%
Durability	1,000,000 sheets, 100,000 sheets (Thick paper ratio is 10%)
Dimensions (H x W x D)	Inside the finisher

7.14 Booklet Trimmer-G1

Item	Specifications
Required Equipment	Booklet Finisher-AF1
Restricted Equipment	Not compatible with the DFD Adapter and Finisher Bridge.
Print Controller	• imagePRESS D3000 • PRISMAsync
Margin Trimming Method	Upper knife reciprocating fore-edge
Trim Amount	0.08” to 1.10” (2 mm to 28 mm)
Trimming Capacity[38], [39]	Uncoated Paper 25 sheets (50 sheets booklet) 13 to 20 lb bond (52 to 80 g/m^2) 15 sheets (30 sheets booklet) 20 to 28 lb bond (80 to 105 g/m^2) 5 sheets (10 sheets booklet) 28 to 56 lb bond (105 to 209 g/m^2) 4 sheets (8 sheets booklet) 56 to 58 lb bond (209 to 220 g/m^2) Coated Paper 10 sheets (20 sheets booklet) 19 to 20 lb bond (70 to 80 g/m^2) 15 sheets (30 sheets booklet) 20 lb bond (80 to 81.4 g/m^2) 10 sheets (20 sheets booklet) 20 to 34 lb bond (81.4 to 128 g/m^2) 5 sheets (10 sheets booklet) 34 to 56 lb bond (128 to 209 g/m^2) 4 sheets (8 sheets booklet) 56 to 58 lb bond (209 to 220 g/m^2) 22 to 110 lb cover (64 to 300 g/m^2) cover sheet can be used. Use a thicker sheets for the cover sheets than the other sheets in the booklet. For two-fold sheet, 28 lb bond to 110 lb cover (105 to 300 g/m^2) for normal paper, 32 lb bond to 110 lb cover (120 to 300 g/m^2) for coated paper. Unstitched two-fold sheets cannot be trimmed.
Acceptable Paper Sizes[40]	13” x 19”, 12” x 18”, 11” x 17”, LGL, LTR Custom: 8.3” x 11” to 13” x 19.2” (210 mm x 279.4 mm to 330.2 mm x 487.7 mm)
Acceptable Paper Weights	14 lb bond to 110 lb cover (52 to 300 g/m^2)
Booklet Waste Tray Capacity	5,000 sheets of trimmed strips (width 0.78” (20 mm), LTR paper (20 lb bond (80 g/m^2))
Conveyor Capacity	Conveyor belt - 10 booklets (50 sheets, 20 lb bond (80 g/m^2)))
Power Source	From the finisher
Maximum Power Consumption	Approximately 300 W
Dimensions (W x D x H)	82.5” x 31.1” x 40.9” (2,095 mm x 790 mm x 1,040 mm) (With conveyor and delivery tray) 47.2” x 31.1” x 40.9” (1,200 mm x 790 mm x 1,040 mm) (Without conveyor and delivery tray)
Weight	Approximately 392 lb (178 kg)

38 If the cover sheet is thinner than the other sheets in the booklet, the cover sheet may be scratched. It is recommended to use a thicker sheet for the cover sheet.
39 The maximum number of sheets that can be trimmed may differ, depending on the main machine.
40 The possible trim size may change, depending on the main machine.

7.15 Two-Knife Booklet Trimmer-B1

Item	Specifications
Required Equipment[41]	One of: Booklet Finisher-AF1, Booklet Trimmer-G1
Maximum Number of Sheets Trimmable	50 sheets (21 lb bond (80 g/m^2)) 48 sheets (21 lb bond (80 g/m^2)) + 2 sheets (110 lb cover (300 g/m^2))
Paper Size	LTR-R, 11” x 17”, LGL, 12” x 18”, 13” x 19.2
Trimming Width	0.08” - 0.59” (2 mm – 15 mm)[42] [43]
Waste Tray Capacity	Approximately 5,000 sheets of 20 mm-width trimmed piece
Conveyer Tray Capacity	10 booklets
Power Source	120 – 127 V AC, 50/60 Hz, 4 A
Maximum Power Consumption	Approximately 440 W
Dimensions (W x D x H)	21.1” x 30.3” x 40.9” (536 mm x 770 mm x 1,040 mm)[44] [45]
Weight	Approximately 319 lb (145 kg)

41 When equipped with the Two-Knife Booklet Trimmer Conveyor-B1, the Booklet Finisher-AF1 is required.
42 Each width of top and bottom edge.
43 Minimum length in top and bottom direction: 7.48” (190 mm).
44 Dimensions of conveyer tray are not included.
45 0.2” (5 mm) needs to be added to the width when it is connected to the Booklet Trimmer-G1.

7.16 GBC Multi Function Professional Puncher-C1

Item		Specifications
Restricted Equipment		Not compatible with the Inspection Unit-B1 when using the PRISMAsync controller[10]
Paper Size	**Long Edge First**	LTR, STMT
	Short Edge First	LTR, LTR Double Punch, LGL, 11” x 17”, 11” x 17” Double Punch
	Tab	LTR with 3, 4, 5, 8, and 10 tabs STMT with 3 and 5 tabs
Paper Weight[46]		Plain Paper: 20 lb bond to 110 lb cover (75 to 300 g/m^2) Coated Paper: 32 lb bond to 110 lb cover (120 to 300 g/m^2) Clear Cover: 7 mil
Bypass Mode		Supports all paper sizes and stock as main engine
Punch Capacity		1 sheet (from 75 g/m^2 to 300 g/m^2)
Power Source		115V AC, 60 Hz
Dimensions (W x D x H)		17.5” x 31.3” x 40.9” (445 mm x 795 mm x 1,040 mm)
Weight		Approximately 224.9 lb (102 kg)

7 OHP/transparencies and film cannot be punched or creased with the Multi Function Professional Puncher-C1. Bypass is supported.

10 With the imagePRESS D3000 controller, the Perfect Binder, Multi Function Professional Puncher, and GBC eWire accessories can be attached, but inspection mode is not available when configured with the Inspection Unit. With the PRISMAsync controller, the Perfect Binder, Multi Function Professional Puncher, and GBC eWire cannot be attached when configured with the Inspection Unit.

IMPORTANT

Settings for the GBC Multi Function Professional Puncher must be made from the engine UI. Settings made on the Puncher’s UI will not take effect.

46 The paper weight and paper stocks differ, depending on the selected die set.

7.17 Perfect Binder-F1

Item	Specifications
Required Equipment	If using PRISMAsync controller, must have Advanced Imposition and PRISMAprepare
Restricted Equipment	Not compatible with the Inspection Unit-B1 when using the PRISMAsync controller[10]
Bookbinding Thickness	10-200 sheets (80 g/m^2) or up to approximately 1 inch (25 mm)
Bookbinding Method	Glue binder using hot melt on small glue tray, cutter to cut 3-side by rotating booklet
Bypass Size	All media supported by the main engine
Book Size	5.4” x 8” – 8.5” x 11.7” (138 mm x 203 mm – 216 mm x 297 mm)[47]
Cover Sheet Size	14.3” x 10.1” – 19.2” x 13” (364 mm x 257 mm – 487.7mm x 330.2 mm)[47] [48]
Contents Sheet Size	7.2” x 10.1 – 9” x 12.6” (182 mm x257 mm - 228.6 mm x 320 mm)
Paper Weight	Contents (bond): 14 lb – 43 lb (52-163 g/m^2) Cover: 33 lb – 111 lb (91-300 g/m^2)
Margin Trimming	3 side, 1 side (foredge), or no trimming Side: 0.3” to 2” (6.5 mm to 49.5 mm) Top & Bottom: 0.3” to 1.6” (6.5 mm to 39.5 mm)
Tray Capacity	Approximately 1,000 sheets total or up to 5” (127 mm)
Waste Paper Capacity	15 books of 100 sheets contents
Warm-up Time	Less than 440 seconds
Power Source	208V AC, 50/60Hz, 3.0A
Maximum Power Consumption	Approximately 630 W
Dimensions (W x D x H)	36.3” x 31.1” x 51.2” (922 mm x 791 mm x 1,300 mm)
Weight	Approximately 679lb (308kg)

10 With the imagePRESS D3000 controller, the Perfect Binder, Multi Function Professional Puncher, and GBC eWire accessories can be attached, but inspection mode is not available when configured with the Inspection Unit. With the PRISMAsync controller, the Perfect Binder, Multi Function Professional Puncher, and GBC eWire cannot be attached when configured with the Inspection Unit.

47 Different specifications for using imagePRESS server.
48 Sheet vertical to horizontal ratio should be 1 to 1.25 – 1.5.

7.17.1 Perfect Binder Continuous Kit-B1

Item	Specifications
Function	Perfect Binder accessory which replaces the output tray. The Perfect Binder Continuous Kit continuously delivers bound books to outside the engine for increased productivity[49].
Required Equipment	Perfect Binder
Supported Paper Sizes	Same as Supported Book Sizes for the Perfect Binder, listed above
Power Source	From the Perfect Binder-F1
Dimensions (W x Dx H)[50]	Approximately 16.4” x 24.6” x 10.3” (417 mm x 625 mm x 262 mm)
Weight[50]	Approximately 19.8 lb (9 kg)

7.18 Document Insertion Unit-R1

Item	Specifications
Paper Size	LGL, LTR, LTRR, EXE, 11 x 17, STMTR, EXEC, Custom Size (7.2” x 7.2”(182.9 mm x 182.9 mm) - 13" x 19.2" (330.2 mm x 487.7 mm))
Paper Weight	14 lb bond – 110 lb cover (52 g/m^2 – 300 g/m^2)
Paper Type	Thin, Plain, Heavy, Recycled, Color, Tab, Bond, Letterhead, 1-Sided Coated, 2-Sided Coated, Matte Coated, Textured, Vellum, Synthetic
Paper Capacity	200 sheets × 2 (20 lb bond (80 g/m^2))
Power Source	100 – 240 V AC, 50/60 Hz, 1.0 A
Maximum Power Consumption	120 W
Dimensions (W x D x H)	29.4” x 31.2” x 55.4” (746 mm x 793 mm x 1,407mm)
Installation Space Including the Main Unit (W x D)	118.1” x 37” (2,999 mm x 941 mm)[51]
Weight	Approximately 134lb (61kg)

49 Customer is responsible for collecting output from the Perfect Binder Continuous Kit.
50 The Perfect Binder Continuous Kit is installed internally to the Perfect Binder. It adds no additional footprint to the Perfect Binder, but does add to the total weight of the Perfect Binder when installed.
51 When the Booklet Finisher-AF1 and Paper Folding Unit-K1 are attached, and the auxiliary tray of the output tray and the multi-purpose tray are extended.

7.19 Paper Folding Unit-K1

Item	Specifications
Required Equipment	One of: Finisher-AF1, Booklet Finisher-AF1
Paper Size	Z-Fold: LTRR, LGL, and 11” x 17” C-Fold: LTRR Accordion Z-Fold: LTRR Double Parallel Fold: LTRR and LGL Half Fold: LTRR
Paper Weight	Z-Fold: 14 lb bond to 28 lb bond (52 g/ m^2 to 105 g/m^2) C-Fold: 14 lb bond to 28 lb bond (52 g/m^2 to 105 g/m^2) Accordion Z-Fold: 14 lb bond to 28 lb bond (52 g/m^2 to 105 g/m^2) Double Parallel Fold: 14 lb bond to 24 lb bond (52 g/m^2 to 90 g/m^2) Half Fold: 14 lb bond to 28 lb bond (52 g/m^2 to 105 g/m^2)
Paper Type	Thin, plain, recycled, color, and bond
Paper Output	Z fold, Half fold： Finisher tray C fold, Accordion Z fold, Double Parallel Fold: Folding unit output tray
Output Capacity	Loading height: 2.36” (60mm) C-fold, Accordion Z-Fold: equivalent to 40 sheets Double Parallel Fold: equivalent to 25 sheets
Power Source	From the finisher
Maximum Power Consumption	150 W
Dimensions (W x D x H)	13.2” x 31.2” x 46.9” (336 mm x 793 mm x 1,190 mm)
Weight	Approximately 157 lb (71 kg)

7.20 PowerLift

Item	Specifications
Maximum Lifting Weight	Approximately 175 lb (80 kg)
Maximum Fork Height	47” (1,200 mm)
Minimum Fork Height	4” (100 mm)
Available Number of Pallets	5
Power Source	24 V (From two 12 V batteries), 9.0 Ah gas tight and maintenance free
Charger	120 V AC, 60 Hz, 2 A
Charging Time	Approximately 4 to 5 hours (Discharged batteries)
Dimensions (H x W x D)	Approximately 60” x 21” x 33” (1,520 mm x 530 mm x 850 mm)
Pallet Dimensions (W x D)	Approximately 19.7” x 13” (500 mm x 330 mm)
Weight	Approximately 128 lb (58 kg)

7.21 SDD Square Fold Booklet Maker

Item	Specifications
Required Equipment	Booklet Trimmer-G1
Booklet Trimming	Input Width: Approximately 5.51” (140 mm) to 12.60” (320 mm) Output Width: Same as Input Input/Output Length: Approximately 4.88” (124 mm) to 9.60” (244 mm)
Acceptable Paper Weights	16 lb bond to 110 lb cover (60 to 300 g/m^2)
Booklet Sheet Capacity	Up to 25 sheets (20 lb bond (80 g/m^2))
Maximum Productivity	Up to 1,800 booklets/hour (up to 40 pages (20 lb bond (80 g/m^2))
Power Source	120 V AC, 60 Hz, 15 A
Maximum Power Consumption	Approximately 230 W
Dimensions (H x W x D)	Approximately 45” x 43.3” x 14.2” (1,140 mm x 1,100 mm x 360 mm) (with the conveyor fully extended)
Weight	Approximately 154 lb (70 kg)

IMPORTANT

The SDD Square Fold Booklet Maker cannot be installed with the SDD Square Fold Booklet Maker with Two-Knife Trimmer.

7.22 SDD Square Fold Booklet Maker with Two-Knife Trimmer

Item	Specifications
Required Equipment	Booklet Trimmer-G1
Pass Through Width (No Trimming)	Approximately 8.27” (210 mm) to 12.60” (320 mm)
Booklet Trimming	Input Width[52]: Approximately 8.27” (210 mm) to 12.60” (320 mm) Output Width: Approximately 7.87” (200 mm) to 12.60” (320 mm) Input/Output Length: Approximately 4.71” (120 mm) to 9.60” (244 mm)
Acceptable Paper Weights	16 lb bond to 110 lb cover (60 to 300 g/m^2)
Trimming Width	Each Side: 0.08” to 1.38” (2 mm to 35 mm) Together: 0.16” to 2.76” (4 mm to 70 mm)
Asymmetrical Trim (Offset Capability)	Approximately ±0.59” (15 mm)
Minimal Booklet Staple Clearance (from Top to Bottom)	Approximately 1.57” (40 mm)
Booklet Sheet Capacity	Up to 25 sheets (20 lb bond (80 g/m^2))
Maximum Productivity	Up to 800 booklets/hour (up to 100 pages (20 lb bond (80 g/m^2))
Power Source	120 V AC, 60 Hz, 15 A
Maximum Power Consumption	Approximately 740 W
Dimensions (H x W x D)	Approximately 51.2” x 62.6” x 27.6” (1,300 mm x 1,592 mm x 700 mm) (With the conveyor full extended)
Weight	Approximately 573 lb (260 kg)

IMPORTANT

- The SDD Square Fold Booklet Maker with Two-Knife Trimmer cannot be installed with the SDD Square Fold Booklet Maker.

52 If a booklet’s input height is greater than 12.60” (320 mm), it must be trimmed to 12.60” (320 mm) or fewer inches/millimeters.

7.23 SDD BLM300C Professional Booklet Maker

Item	Specifications
Required Equipment	High Capacity Stacker-J1 OR DFD Adapter and Finisher Bridge Unit Finisher Bridge Height Kit 1002-A1
Supported Paper size	LTRR, 11” x 17”, 12” x 18”, Custom Sizes: 5.5” x 9.76” (140 mm x 248 mm) to 12.6” x 18.5” (320 mm x 470 mm)
Supported Paper Weight	16 lb bond to 110 lb cover (60 to 300 g/m^2)
Maximum Number of Sheets per Booklet	Up to 30 sheets (20 lb bond (80 g/m^2))
Maximum Staple Capacity	Up to 30 sheets (20 lb bond (80 g/m^2)), or up to 0.23” (6 mm) in height
Speed	LTRR: Up to 2,980 booklets/hour 11” x 17”: Up to 2,610 booklets/hour
Noise Level	Approximately 70 dB
Power Source	120V, 15 A, NEMA 5-15P
Dimensions (H x W x D)	Operational: 45 1/4” x 35 7/8” x 27 1/2” (1,150 mm x 910 mm x 700 mm) On Pallet in Box: 51 1/4” x 47 1/4” x 31 1/2” (1,300 mm x 1,200 mm x 800 mm)
Weight	Operational: Approximately 363.8 lb (165 kg) On Pallet in Box: Approximately 474 lb (215 kg)
Temperature	Between 62.6°F (17°C) and 89.6°F (32°C)
Humidity	30% to 65% Relative Humidity

IMPORTANT

The SDD BLM300C Professional Booklet Maker finishing system must be the final in-line accessory attached to the machine.

7.23.1 SDD Front Trimmer BLT6989

Item	Specifications
Supported Paper size	LTRR, 11” x 17”, 12” x 18”, Custom Sizes: 5.5” x 9.76” (140 mm x 248 mm) to 12.6” x 18.5” (320 mm x 470 mm)
Supported Paper Weight	16 lb bond to 110 lb cover (60 to 300 g/m^2)
Trim Amount	Supported: 0.08” to 0.63” (2 mm to 16 mm) Recommended: 0.16” to 0.47” (4 mm to 12 mm)
Maximum Trimmed Booklet Width	Approximately 8.66” (220 mm)
Speed	LTRR: Up to 1,965 booklets/hour 11” x 17”: Up to 1,797 booklets/hour
Power Source	From the SDD BLM300C Professional Booklet Maker
Dimensions (H x W x D)	Operational: 43 3/8” x 14 1/4” x 23 5/8” (1,110 mm x 360 mm x 600 mm) On Pallet in Box: 23 3/8” x 47 1/4” x 31 1/2” (720 mm x 1,200 mm x 800 mm)
Weight	Operational: Approximately 187.4 lb (85 kg) On Pallet in Box: Approximately 264.6 lb (120 kg)

7.23.2 SDD 2-Knife Trimmer STR6702

Item		Specifications		
Booklet Size (Length)[53]		**Before Trimming**	**Bypass**	**Trimmed**
	Minimum	8” (204 mm)	5.9” (150 mm)	7.2” (182 mm)
	Maximum	13.4” (340 mm)	12.6” (320 mm)	12.6” (320 mm)
Booklet Width (X)		Approximately 2” to 9.6” (50 mm to 245 mm)		
Supported Paper Weight[54]		16 lb bond to 110 lb cover (60 to 300 g/m^2)		
Maximum Booklet Thickness		Trimming: Up to 0.2” (5 mm) Bypass: Up to 0.23” (6 mm)		
Trim Amount		Approximately 0.08” to 1.38” (2 mm to 35 mm) each side		
Asymmetrical Trim		Approximately ±0.59” (±15 mm)		
Booklet Staple Clearance from Top/Bottom (Minimal)		Approximately 1.57” (40 mm)		
Speed		LTRR: Up to 1,800 booklets/hour 11” x 17”: Up to 1,800 booklets/hour		
Power Source[55]		From the SDD BLM300C Professional Booklet Maker		
Dimensions (H x W x D)		Operational: 43 3/8” x 23 5/8” x 27 1/2” (1,110 mm x 600 mm x 700 mm) On Pallet in Box: 61 7/8” x 47 1/4” x 31 1/2” (1,570 mm x 1,200 mm x 800 mm)		
Weight		Operational: Approximately 451.9 lb (205 kg) On Pallet in Box: Approximately 595.2 lb (270 kg)		

53 Booklet heights between 320 mm and 340 mm must be trimmed to 320 mm or less.
54 On booklets of approximately 20 sheets or more, always use cover sheets that weigh 120 g/m^2 or heavier to prevent trimming deviations.
55 Can only be connected to an approved electrical system, which is rated at a maximum of 16 A, and is protected by circuit breakers.

7.23.3 SDD Square Fold SFM6904

Item	Specifications
Supported Paper size	LTRR, 11” x 17”, 12” x 18”, Custom Sizes: 5.5” x 9.76” (140 mm x 248 mm) to 12.6” x 18.5” (320 mm x 470 mm)
Supported Paper Weight	16 lb bond to 110 lb cover (60 to 300 g/m^2)
Speed	LTRR: Up to 1,800 booklets/hour 11” x 17”: Up to 1,800 booklets/hour
Power Source	From the SDD BLM300C Professional Booklet Maker
Dimensions (H x W x D)	Operational: 43 3/8” x 14 1/4” x 23 5/8” (1,110 mm x 360 mm x 600 mm) On Pallet in Box: 23 3/8” x 47 1/4” x 31 1/2” (720 mm x 1,200 mm x 800 mm)
Weight	Operational: Approximately 143.3 lb (65 kg) On Pallet in Box: Approximately 220.5 lb (100 kg)

7.23.4 SDD Rotator RTM6940

Item	Specifications
Supported Paper size	Rotation Enabled: LTR, 9” x 12”, Custom Short Edge: 8” to 9.05” (203 mm to 230 mm) Custom Long Edge: 8” to 12.6” (203 mm to 320 mm) Rotation Disabled (Bypass): 11” x 17” Custom Short Edge: 8” to 12.6” (203 mm to 320 mm), Custom Long Edge: 8” to 20” (203 mm to 508 mm)
Supported Paper Weight	16 lb bond to 110 lb cover (60 to 300 g/m^2)
Power Source[56]	120V, 15 A, NEMA 5-15P
Dimensions (H x W x D)	Operational: 42 1/8” x 26 3/4” x 26 3/8” (1,070 mm x 680 mm x 670 mm) On Pallet in Box: 61 7/8” x 47 1/4” x 31 1/2” (1,570 mm x 1,200 mm x 800 mm)
Weight	Operational: Approximately 286.6 lb (130 kg) On Pallet in Box: Approximately 440.9 lb (200 kg)

56 Can only be connected to an approved electrical system, which is rated at a maximum of 16A and is protected by circuit breakers.

7.23.5 SDD Long Belt Stacker BST6800

Item	Specifications
Booklet Length	Minimum: 7.87” (200 mm) Maximum: 13.7” (350 mm)
Supported Paper Weight	16 lb bond to 110 lb cover (60 to 300 g/m^2)
Power Source	From the SDD BLM300C Professional Booklet Maker
Dimensions (H x W x D)	29.9” x 61.8” x 17.7” (760 mm x 1,570 mm x 450 mm)
Weight	Approximately 55 lb (25 kg)

7.23.6 SDD Short Belt Stacker BST6900

Item	Specifications
Booklet Length	Minimum: 7.87” (200 mm) Maximum: 13.7” (350 mm)
Supported Paper Weight	16 lb bond to 110 lb cover (60 to 300 g/m^2)
Power Source	From the SDD BLM300C Professional Booklet Maker
Dimensions (H x W x D)	29.9” x 32.3” x 17.7” (760 mm x 820 mm x 450 mm)
Weight	Approximately 44 lb (20 kg)

7.24 Plockmatic BLM50/BLM35 Professional Booklet Maker

Item	Specification
Required Equipment	High Capacity Stacker-J1 OR DFD Adapter and Finisher Bridge Unit Finisher Bridge Height Kit 1002-A1
Standard Paper sizes	8.5 x 11”, 8.5” x 14”, 9” x 12”, 11” x 17”, 12” x 18”
Supported Paper sizes	8.1” x 10.8” (206 mm x 275 mm) to 12.6” x 18.1” (320 mm x 459 mm)
Supported Paper Weight	16 lb bond – 115 lb cover (64 g/m^2 - 300 g/m^2) Uncoated 28 lb bond - 115 lb cover (105 g/m^2 – 300 g/m^2) Coated
Input/Output sheets (Stapled)	2 – 50 sheets or 2 – 35 sheets (20 lb bond (80 g/m^2))
Input/Output sheets (Non-stapled)	1 – 2 sheets (folded)
Belt Stacker Capacity	2 sheets: 200 sets 8 sheets: 70 sets 15 sheets: 35 sets 20 sheets: 25 sets 30 sheets: 15 sets 35 sheets: 15 sets 40 sheets: 10 sets 45 sheets: 10 sets 50 sheets: 10 sets Based on 20 lb bond (80 g/m^2)
Maximum Speed	Up to 1,800 booklets/hour
Noise Level	Up to 62dB
Off-line use	Yes
Power source[21]	100-230 V ±10 % 50-60 Hz
Power consumption	250 W or less during continuous operation
Dimensions (H x W x D)	Approximately 41 3/8” x 57 7/8” x 28 3/4” (1,050 mm x 1,470 mm x 730 mm)
Weight	Approximately 341 lb (155 kg)

21 Canon USA strongly suggests that the power receptacle for the BLM 50/35 Professional Booklet Maker is connected to a separate breaker from the power receptacle for the Rotator Module. This is necessary to maintain adequate current for the Professional Booklet-Maker and each of the modules.

7.24.1 Plockmatic Trimmer FTR50

Item	Specification
Default Trim Length	11/64” (4.5 mm)
Minimum trimming	0.0394” (1 mm), recommended minimum is 0.098” (2.5 mm)[57]
Maximum trimming	5/8” (16 mm) per cut[58]
Off-line use	Yes, with Booklet Maker
Weight	Approximately 150 lb (68 kg)
Dimensions (H x W x D)	Approximately 41 3/8" x 14” x 28 3/4" (1,050 mm x 360 mm x 730 mm)
Power source:	From the Booklet Maker

7.24.2 Plockmatic Rotate Crease Trimmer RCT50

Item	Specification
Maximum paper width	Approximately 13” (330 mm)
Rotator	Width: Approximately 10.9” to 12.7” (275 mm to 325 mm) Length: Approximately 8.1” to 9.1” (205 mm to 232 mm)
Minimum bleed trim	Approximately 5 mm
Maximum bleed trim	Approximately 30 mm
Maximum asymmetric bleed trim	Approximately ± 5 mm
Off-line use	No
Power source[21]	100-230V ± 10%, 50-60 Hz
Power consumption	Approximately 300W continuous, 400W maximum
Dimensions (H x W x D)	Approximately 42 1/2” x 28” x 33 3/4” (1,080 mm x 710 mm x 860 mm)
Weight	463 lb (210 kg)

21 Canon USA strongly suggests that the power receptacle for the BLM 50/35 Professional Booklet Maker is connected to a separate breaker from the power receptacle for the Rotator Module. This is necessary to maintain adequate current for the Professional Booklet-Maker and each of the modules.

7.24.3 Plockmatic Cover Feeder CF50

Item	Specifications
Supported Paper Size	12” x 18”, 11” x 17”, 9” x 12”, LGL, LTR, LTRR, Custom Sizes: 8.1” x 10.8” (206 mm x 275 mm) to 12.6” x 18” (320 mm x 457.2 mm)
Supported Paper Weight	Uncoated: 16 lb bond to 90 lb cover (60 to 250 g/m^2) Coated: 28 lb bond to 90 lb cover (105 to 250 g/m^2)
Power Source	From the Plockmatic BLM50/BLM35 Professional Booklet Maker
Dimensions (W x D x H)	12.2” x 7.5” x 20.9” (310 mm x 190 mm x 530 mm)
Weight	Approximately 17.6 lb (8 kg)

57 When trimming SRA3 (450 mm), minimum trimming is 5 mm. When trimming 18”, minimum trimming is 9 mm.
58 Trim larger than 5/8” (16 mm) causes the trimmer to make multiple cycles, reducing system speed in some applications. Multiple cuts also affect the lifetime of the machine.

7.24.4 Plockmatic Booklet Fold Module BF50

Item	Specifications
Supported Paper Size	12” x 18”, 11” x 17”, 9” x 12”, LGL, LTR, LTRR, Custom Sizes: 8.1” x 10.8” (206 mm x 275 mm) to 12.6” x 18” (320 mm x 457.2 mm)
Supported Paper Weight	Uncoated: 16 lb bond to 110 lb cover (60 to 300 g/m^2) Coated: 28 lb bond to 110 lb cover (105 to 300 g/m^2)
Power Source	From the Plockmatic BLM50/BLM35 Professional Booklet Maker
Dimensions (W x D x H)	14.2” x 28.8” x 41.4” (360 mm x 730 mm x 1,050 mm)
Weight	Approximately 99 lb (45 kg)

7.24.5 SDD Front Trimmer BLT6989

Item		Specification
Speed		Variable
Overlap		Adjustable
Capacity	**8.3” x 11.7”**	Up to 1,000 (2 sheet booklets, 20 lb bond (80 g/m^2))
	11.7’ x 16.5”	Up to 500 (2 sheet booklets, 20 lb bond (80 g/m^2))
Side Guides		Adjustable 14” (0 to 357 mm)
Weight		154 lb (70 kg)
Dimensions [59]	**Table height**	25 “ to 41.7” (635 mm to 1,060 mm)
	Width	20.5” (521 mm)
	Length	70.5” (1,791 mm)
Power source		100 – 240V, 50 – 60Hz, 1A
Power consumption		70W or less

59 Input height is Table height + 2.4” (60 mm) + Control Unit + 14” (350 mm) for end stacking tray.

7.25 DFD Adapter-B1 and Finisher Bridge Unit-A1

The DFD Adapter-B1 and Finisher Bridge Unit-A1 are listed separately below; however, they are sold together as one unit (under –B1).

IMPORTANT

The DFD Adapter-B1 and Finisher Bridge-A1 transports sheets to supported third party accessories. The paper size depends on the supported paper size of the connected third party accessory.

7.25.1 DFD Adapter-B1

Item	Specification
Restricted Equipment	Not compatible with Booklet Trimmer-G1
Paper Weight	13 lb bond to 110 lb cover (50 to 300 g/m^2)
Connectivity	29.3” (745 mm) paper path height (input) 33.8” (860 mm) paper output path CAN connection
Power source	100-240V, 50-60 Hz, 2A
Dimensions (H x W x D)	Approximately 40.9” x 11.8” x 29.3” (1,040 mm x 300 mm x 745 mm)
Weight	Approximately 132 lb (60 kg)
Option	Finisher Bridge Height Kit 1002-A1[60]

7.25.2 Finisher Bridge-A1

Item	Specification
Required Equipment	• DFD Adapter-B1 • One of: Staple Finisher-AF1, Booklet Finisher-AF1
Paper Weight	13 lb bond to 110 lb cover (50 to 300 g/m^2)
Dimensions (H x W x D)	Approximately 5.9” x 23.6” x 29.3” (150 mm x 600 mm x 745 mm)
Weight	Approximately 66 lb (30 kg)

IMPORTANT

- Envelopes are not supported when the Finisher Bridge-A1 is attached to the Staple/Booklet Finisher-AF1
- High Capacity Stack Mode is not available when the Finisher Bridge-A1 is attached to the Staple/Booklet Finisher-AF1

60 Required when the DFD Adapter and Finisher Bridge Unit-A1 are configured with the SDD BLM300C Professional Booklet Maker.

7.26 GBC eWire Pro Wire Binding System

NOTE

eWire units installed in field with serial numbers starting with EA through GL may require a modification to support 'F' size element. If the eWire customer with a serial number in this range would like to use the 'F' size element, please have the service team review the Technical Publication on "Availability of 'F' Element Update" and contact Canon USA Service.

7.26.1 Binding Specifications

Item		Specification
Required Equipment		Multi Function Professional Puncher-C1
Restricted Equipment		Not compatible with the Inspection Unit-B1 when using the PRISMAsync controller[10]
Speed		Up to 140 sheets-per-minute
Paper Weight[61]	**Plain**	20 lb bond – 100 lb cover (75 g/m^2 – 300 g/m^2)
	Coated	32 lb bond – 110 lb cover (115 g/m^2 – 300 g/m^2)
	Tabs	47 lb bond – 80 lb cover (176 g/m^2 – 216 g/m^2)
Book composition		2 covers (121 g/m^2 – 300 g/m^2), body (75 g/m^2 – 210 g/m^2)
Sheet size		LTR (LEF (Long Edge Feed))
Tabbed stock		LTR – 3, 5, 8, 10 tabs
Die/punched hole type		eWire Round or eWire Square[62]
Wire supply format		Continuous wire spool with paper carrier
Book count (per spool)		1/4" wire 16,700 loops 522 books 5/16” wire 10.400 loops 325 books 3/8” wire 8,200 loops 256 books 7/16” wire 5,900 loops 184 books 1/2" wire 4,350 loops 136 books
Bound book size (wire size, sheet capacity[63] [64], and max book thickness)		1/4" wire 16,700 loops 15 – 30 sheets 3 mm 5/16” wire 10.400 loops 31 – 50 sheets 5 mm 3/8” wire 8,200 loops 51 – 60 sheets 6 mm 7/16” wire 5,900 loops 61 – 70 sheets 7 mm 1/2" wire 4,350 loops 71 – 80 sheets 8 mm
Bound book drawer capacity (wire size and capacity)[65]		1/4" wire 35 books 5/16” wire 35 books 3/8” wire 35 books 7/16” wire 30 books 1/2" wire 25 books

10 With the imagePRESS D3000 controller, the Perfect Binder, Multi Function Professional Puncher, and GBC eWire accessories can be attached, but inspection mode is not available when configured with the Inspection Unit. With the PRISMAsync controller, the Perfect Binder, Multi Function Professional Puncher, and GBC eWire cannot be attached when configured with the Inspection Unit.

61 Clear covers are not supported.
62 Not supplied with the GBC eWire Pro Wire Binder.
63 Sheet capacity based on 20 lb bond (75-80 g/m2) paper, less approximately 10 sheets (1 mm) to accommodate front and rear covers at a max of 110 lb cover (300 g/m2)
64 Ten sheets of 75 – 80 g/m2 paper is approximately 1 mm thick.
65 Book drawer capacity may be slightly lower when binding books with front and rear covers that weigh less than 80 lb cover (216 g/m^2). Some extra books may continue to be bound after the book drawer capacity has been reached, if sheets are already being bound by the print engine.

Binding Specifications (cont'd)

Item	Specification
Warm-up time	Approximately 1.3 seconds
Cycle up time (job start to first sheet at element)	Approximately 19 seconds
Bind time (last sheet stacked to first book dropped)	Approximately 10 seconds
Bind time (last sheet stacked to first sheet of next book)	Approximately 20 seconds
Noise Level	Up to 78 dBA
Power source	115 V, 60 Hz, 2.8A
Power consumption	250 W or less during continuous operation
Dimensions (H x W x D)	Approximately 42.5" x 35.9" x 31.7" (1,079 mm x 911 mm x 805 mm)
Weight	Approximately 500 lb (226 kg)

7.26.2 Bypass Specifications

Item	Specification
Paper Weight	16 lb bond – 130 lb cover (64 g/m^2 – 256 g/m^2)
Clear Cover Weight	5 – 10 mil
Maximum Bypass Sheet Size	13" x 51.2" (330 mm x 1,300 mm)
Minimum Bypass Sheet Size	8" x 5.83" (203 mm x 148 mm) or 6.5" x 7.87" (165 mm x 200 mm)
Media Types[66]	Coated, Tab, Punched, and Clear Cover

66 A cover in full black is not recommended.

7.27 Plockmatic Multi-Purpose Stacker

Item	Specification
Required Equipment	• High Capacity Stacker-J1 • HCS Long Sheet Tray-A1 • DFD Interface Kit-A1 • DFD PATH-B1 (H=860)
Maximum Stack Height	For sheets less than 25.6” (600 mm), maximum stack height is approximately 11.8” (300 mm) For sheets longer than 25.6” (600 mm), maximum stack height is approximately 5.3” (135 mm)
Maximum Stack Weight	Approximately 88.2 lb (40 kg)
Supported Paper Size	8.5” x 11” (long edge), 9” x 12” (long edge), 11” x 17”, 12” x 18”, Custom Size (8.27” x 11” (210 mm x 280 mm) to 13” x 30”(330 mm x 762 mm))
Supported Paper Weight[67]	39 lb bond to 150 lb cover (148 g/m^2 to 400 g/m^2)
Supported Paper Types	Plain, Coated, Recycled, and Pre-punched
Maximum Curl Level[68]	0.2” (5 mm) flat curl, measured on a flat surface
Paper Size Change	Manual change of paper size
Side Registration Adjustment	Mechanical side guides, operator adjusted
Power source	100-240 V, 50-60 Hz, 2A
Dimensions (H x W x D)	Approximately 41.8” x 35.4” x 26.8” (1,060 mm x 900 mm x 680 mm) Width expandable to approximately 55” (1,410 mm)
Weight	Lift Unit: Approximately 157 lb (71 kg) Docking Unit: Approximately 11 lb (5 kg)
Temperature Range	59 degrees F to 86 degrees F (15 degrees C to 30 degrees C)
Humidity Range	30% - 80% relative humidity

67 Media less than 39 lb bond (148 g/m^2) may be stackable but is highly sensitive to curl, environmental conditions, and line speed.

68 Stacking of thinner paper with curl will cause more frequent jams and poorer stack quality.

7.28 Inspection Unit-B1

7.28.1 Inspection Unit Specifications

Item	Specification
Required Equipment	Print Controllers: imagePRESS Server D3000
Restricted Equipment	Not compatible with the Perfect Binder[10], Multi Function Professional Puncher[10], or GBC eWire[10]
Supported Paper Size	Bypass: Same as imagePRESS V1000 Scan: 3.9” x 7.2” to 13” x 19.2” (98.4 mm x182 mm-to 330.2 mm x 487.7 mm) Mixed sizes not supported
Supported Paper Weight	Same as imagePRESS V1000
Supported Paper Types[69]	Same as imagePRESS V1000 with the exceptions of Clear, Film, Tab, and paper that is not rectangular (e.g., rounded corners)
Method	CIS original scanning method
Original Scanning Method	Stream scanning
Feed Mode of Original	Simultaneous 2-sided scanning
Reading Resolution	150 dpi x 150 dpi
Number of Gradations	256
Power source	100-240V, 50/60Hz, 1.4A
Dimensions (W x D x H)	Approximately 9.8” x 31.2” x 40.9” (250 mm x 792 mm x 1,040 mm)
Weight	Approximately 109 lb (49.5 kg)

10 With the imagePRESS D3000 controller, the Perfect Binder, Multi Function Professional Puncher, and GBC eWire accessories can be attached, but inspection mode is not available when configured with the Inspection Unit. With the PRISMAsync controller, the Perfect Binder, Multi Function Professional Puncher, and GBC eWire cannot be attached when configured with the Inspection Unit.

69 Media with special characteristics may cause false readings during inspection.

7.28.2 Workstation Unit Specifications

Item	Specification
Inspection Mode	Log Only Mode, Purge and Recovery Mode, Purge Mode
Inspection Target	Images, Letters (Uppercase letters except O), Numbers, Barcodes, Symbols (#,/< > ())
Inspection Level	9 gradations
Inspection Minimum Range	Dirty image :0.2 mm x 0.2 mm Misalignment image : 0.1 mm to 3 mm
Inspection Range	2-sided
Defective Ejection	To top Tray of High Capacity Stacker has ejection[70]
PC	Equivalent to HP Z8 G4 Tower Workstation
OS	Windows 10 Pro 64 bit for Workstations Plus
Monitor	23” or greater

70 It is necessary to put on the High Capacity Stacker and set the escape mode to ON.

7.29 Sensing Unit-B1

Item	Specification	
Required Equipment	Print Controllers: One of: PRISMAsync V8.2 or later, imagePRESS Server D3000	
Periodic Adjustment	Paper Size:	Same as imagePRESS V1000
	Paper Type:	Thin, plain, recycled, color[71], thick, coated, embossed[72], film[71], label[73], pre-punched[74], and synthetic (Polypropylene and Polyester)
Adjustment by Printing Markers Over Parts of User's Images	Paper Size:	Same as imagePRESS V1000 up to 30" (762 mm) in length
	Paper Type:	Thin, plain, recycled, color[71], thick, coated, embossed[72], film[71], and label[73]
	Req'd Print Margin:	Cross track direction：9.21 mm (3.5 mm (Print Margin) + 4.71 mm (Registration Adjustment Mark) + 1 mm (White Area)) Paper feed direction：9.5 mm (4.0 mm (Print Margin) + 4.5 mm (Registration Adjustment Mark) + 1 mm (White Area))
Adjustment by Inserting Adjustment Pages	Paper Size:	Same as imagePRESS V1000 up to 30" (762 mm) in length, and paper sizes that can be ejected to the sample tray (7.2" (182 mm) or over in length)
	Paper Type:	Thin, plain, recycled, color[71], thick, coated, embossed[72], film[71], label[73], pre-punched[74], and synthetic (Polypropylene and Polyester)
	Interval:	50 to 9,999 page (Default:1,000 pages), Common counter with gradation adjustment specified for each media
	# Interrupt Sheets:	3 sheets

71 Adjustment may not be possible, depending on the base color of the paper/film.
72 Adjustment may not be possible, depending on depth of emboss.
73 Adjustment mark cannot be printed on the perforated part.
74 Adjustment mark cannot be printed on the pre-punched part.

Sensing Unit-B1 (cont'd)

Item	Specification	
Shading Correction	Paper Size:	13" x 19", 12" x 18", 11" x 17"
	Paper Type:	Thin, plain, thick, coated
Secondary Transfer Voltage Adjustment	Paper Size:	11" x 8" to 13" x 51.2" (279.4 mm × 203.2 mm to 330.2 mm × 1,300 mm)
	Paper Type:	Thin, plain, recycled, thick, coated, embossed[72], label[73], and synthetic (Polypropylene and Polyester)
Power source	100V – 240V, 50/60 Hz, 2.5A	
Maximum Power Consumption	Approximately 500W or less	
Dimensions (W x D x H)	20.3" x 29.5" x 48.3" (515 mm x 750 mm x 1,228 mm)	
Weight	221.6 lb (100.5 kg)	

72 Adjustment may not be possible, depending on depth of emboss.
71 Adjustment may not be possible, depending on the base color of the paper/film.
74 Adjustment mark cannot be printed on the pre-punched part.
73 Adjustment mark cannot be printed on the perforated part.

8. Installation Review

This chapter describes the time required to install the main unit and optional equipment, the necessary number of technicians required to install the machine properly, and customer installation responsibilities.

8.1 Installation Time

The time required to install the imagePRESS V1000 depends on the options and accessories to be installed, and the number of technicians performing the installation. Customers should discuss the time requirements with their servicing dealer and schedule the installation accordingly.

IMPORTANT

Set up time may vary due to the following conditions:

- Forklift availability and its operator
- Narrow hallways, or a need to remove doors to enter rooms
- Uneven or damaged floors making leveling the equipment difficult and time consuming

The table below indicates the estimated length of time needed to unpack and install the machine and optional accessories. The estimated installation times are based on a minimum of two (2) experienced technicians.

Description	Estimated Time
imagePRESS V1000 – Main Unit	120 minutes
Flat Control Panel-A1	6.3 minutes
imagePRESS Server D3000 Controller	35 minutes[75]
Duplex Color Image Reader Unit-P1	27.3 minutes
Printer Cover-P1	7.1 minutes
POD Deck Lite-C1	18.5 minutes
POD Deck Lite-C1 and POD Deck Lite Attachment Kit-C1 (to main engine)	24.8 minutes
POD Deck Lite-C1 and POD Deck Lite Attachment Kit-C1 (to Multi Drawer Paper Deck)	28.3 minutes
POD Deck Lite XL-A2	29.5 minutes
Multi-Drawer Paper Deck-E1	42 minutes
Staple Finisher-AF1	12.4 minutes
Booklet Finisher-AF1	13 minutes
Puncher Unit-BS1/BT1/BU1	13.1 minutes
Multi Function Professional Puncher-C1	13 minutes
Perfect Binder-F1	43.7 minutes
Perfect Binder Continuous Kit-B1	25.9 minutes
Booklet Trimmer-G1	37.7 minutes[76]
Two-Knife Booklet Trimmer-B1	25.3 minutes
Two-Knife Booklet Trimmer Conveyor-B1	19.2 minutes
Document Insertion Unit-R1	15.4 minutes
Paper Folding Unit-K1	21.7 minutes
Copy Control Interface Kit-A1	6.2 minutes
Memory Mirroring Kit-A1	17.5 minutes
SDD Square Fold Booklet Maker	120 minutes
SDD Square Fold Booklet Maker with Two-Knife Trimmer	120 minutes

75 Installation time includes installing/placing hardware, configuring software, and installing software patches.
76 When connected to the Booklet Finisher-AF1.

Estimated Installation Time (cont'd)

Description	Estimated Time
SDD BLM300C Professional Booklet Maker[77]	50 minutes
DFD Interface Kit (Installs inside High Capacity Stacker-J1)	60 minutes
SDD Rotator RTM6940	60 minutes
SDD Front Trimmer BLT6989	40 minutes
SDD 2-Knife Trimmer STR6702	40 minutes
SDD Square Fold SFM6904	30 minutes
SDD Long Belt Stacker BST6800 or Short Belt Stacker BST6900	15 minutes
Plockmatic BLM50/BLM35	1 hour 30 minutes
Trimmer FTR50	42 minutes
Cover Feeder CF50	45 minutes
Booklet Fold BF50	45 minutes
Rotate Crease Trimmer BCT50	2 hours
High Capacity Belt Stacker BST4000-1	1 hour
Plockmatic Multi-Purpose Stacker	30 minutes
Inspection Unit-B1	85.1 minutes[78]
Sensing Unit-B1	12.8 minutes

8.2 Customer Installation Responsibilities

Item	Remarks
Identify location for equipment.	Area meets space and service space requirements.
Verify strength of floor and level.	Certified by structural engineers.
Ensure that the equipment can be delivered to the site.	Path is clear and unobstructed.
Confirm proper electrical outlets and power are available.	Dedicated power, and enough outlets for equipment (including accessories).
Area meets environmental specifications.	Temperature and humidity are within specifications, venting provided if necessary.
Network connections available.	Required to activate ULM (standard) and other options.
Security systems and backup plan for data and storage available.	Highly recommended.

77 Add 10 minutes to the installation time if the SDD Rotator RTM6940 is not in the configuration.
78 Software installation time for the Inspection Workstation totals approximately 42 minutes.

9. Customer Productivity Program

The CPP (Customer Productivity Program) enables owners of the imagePRESS V1000 the ability to perform proactive maintenance and self-service on their machine.

The Operator Maintenance mode is embedded in the PRISMAsync and imagePRESS D3000 controllers, and guides only key operators with the skills and knowledge to perform preventative maintenance with an interactive instructional application.

The benefits of the CPP are maximized uptime, higher monthly print volume, reduced dealer service calls, and optimized machine performance. Consult the servicing dealer for program details.

10. Consumable Items

Consumable items are all products and materials that are consumed with regular use and cannot be reused. Such consumables are include, but are not limited to paper, chemicals, and toner.

A number of factors go into the approximate life expectancy of a consumable item, including paper size and the amount of coverage per page.

The Usage Conditions and Consumables tables below, state the estimated life expectancy yields are based on LTR size paper; however, if the customer uses paper larger than LTR, the supply yields and parts life may be reduced.

Refer to "Environmental Factors and Requirements," on page 56 for more information about optimal environmental conditions for the device and consumables.

10.1 Usage Conditions

Operate the machine within the following usage conditions to achieve optimal machine performance.

Item	Condition
Operating Temperature	68°F to 80.6°F (20°C to 27°C)
Operating Humidity	15% to 60%
Optimal Performance Range Per Month	75,000 to 600,000[79]
Color Ratio	80%
Large Paper Ratio	80%
Toner Coverage	40% (10% each color, including black)

79 Based on 28 lb LTR size paper, and under the above optimal environmental conditions.

10.2 Estimated Life of Consumables

NOTE
All consumables shown in the table below are for reference purposes only, and are subject to change without notice.

Drum

Item	Item Number	Quantity	Estimated Yield (Job Length 100, Color Ratio 70%, Average Monthly Copies 100K) (Copies/Prints)[80]
Photosensitive Drum D11 (CMY)	5151C001AA	3 (1 for each color)	555,000
Photosensitive Drum D11 (K)	5150C001AA	1	1,245,000

Toner

Item	Item Number	Quantity	Estimated Yield (A4) (Copies/Prints)[81]
Toner T11 Black	5146C001AA	1	45,500
Toner T11 Cyan	5147C001AA	1	33,000
Toner T11 Magenta	5148C001AA	1	33,000
Toner T11 Yellow	5149C001AA	1	33.000

80 The actual yield may vary, depending upon many factors including, without limitation, monthly copy volume, environment type of image printed, customer handling of the equipment, and paper type (heavy, coated, etc.).
81 The actual consumption of toner varies, depending on saturation, coverage of original, paper type, and job mode.

10.3 Consumable Parts

Consumable Parts are defined as those parts having a limited life that will be reached during a customer's specific machine operation, and then should be replaced as needed. Examples of consumable parts include, but are not limited to feed rollers, cleaning blades, and fixing assembly components.

An estimated consumable parts life can be provided by a service technician to assist in the initial parts/supplies planning. A consumable part's life expectancy is directly related to usage factors, such as paper size, paper quality, environment, usage application, and machine maintenance. Therefore, consumable parts do not have a warranty, and Canon U.S.A., Inc. cannot guarantee a minimum life.

See the *imagePRESS V1000 Service Guide* for a list of Consumable Parts.

11. Waste Toner Yields

The waste toner bottles collect the waste toner during the printing process.

The machine has two waste toner containers and uses the containers in order. When one of the waste toner containers fills, a message displays prompting the operator to prepare a new waste toner container, and the waste toner in use automatically switches to the other bottle. Perform replacement of the container full of waste toner according to the displayed message.

IMPORTANT

Do not replace the waste toner bottle until instructed to do so by a message on the device display. Follow the instructions on the display for which waste toner bottle to replace.

Each waste toner bottle has an approximate capacity of 150,000 LTR images (100% color ratio, 8.5% toner coverage, 50 prints job length). The machine generates an alarm at approximately 120,000 images to indicate the toner bottle is nearing full.

A full waste toner bottle may be replaced while the machine is running because the machine automatically switches over to the other bottle. If both waste toner bottles become full, the imagePRESS V1000 stops.

Full waste toner bottles are collected by the servicer for disposal or recycling, according to applicable laws in the geographical area where the machine is located.

12. Estimated Performance Standards

The EPS (Estimated Performance Standard) is an estimate of the maximum print and scan volumes the machine can achieve in its life span, depending on certain variables:

- If the machine is maintained and serviced by a Canon authorized service technician
- If only Genuine Canon service and consumable parts are used

The actual performance of the machine may vary, based on customer usage factors, such as the environment in which the machine is installed, the types of jobs performed, and the types of media used.

The following EPS values are for reference purposes only, and are based on the use of LTR size paper.

Item	Estimated Life
Reader Unit (Optional)	Reader: Approximately 400,000 scans or 5 years ADF: Approximately 2,000,000 sheets (LTR) or 5 years
Printer	Approximately 36,000,000 sheets (LTR)[82] or 5 years, whichever is earlier
Puncher	Approximately 1,000,000 times or 5 years

82 The machine will continue operating after approximately 20 million sheets; however, performance, copy quality, maintenance costs, etc. cannot be guaranteed.

13. Optimum Monthly Product Performance

The table below describes the differences between the optimum PCV (Print Copy Volume), and maximum PCV. Please note that the numbers in the table are for reference purposes only, and depend strongly on the type of media selected and environmental conditions. For information on the optimal environmental conditions for the machine, see "Environmental Factors and Requirements," on p. 56.

Monthly PCV Type	Description	Number of LTR Prints/Copies
Optimum PCV	This is the print/copy volume range that the equipment was intended to run on a regular basis to maintain a high level of performance and print/copy quality. Running the equipment within this range ensures that no undue stress is placed on components, and it allows time for the proper servicing and maintenance of the equipment.	75,000 to 600,000
Maximum PCV	This is the maximum number of pages the machine can produce within a one-month period. However, sustained use of the machine at this print/copy level will impact the long term performance and durability of the machine. It is recommended to stay within the optimum print/copy volume to reduce a possible increase in servicing and maintenance issues.	1,200,000

IMPORTANT

If the machine consistently runs at or above the maximum PCV, consider purchasing additional machines or higher-volume machines.

14. Machine Productivity

This chapter describes the reliability and productivity of the imagePRESS V1000.

14.1 Machine Reliability and Service Call Ratio

The service call ratio varies, depending on the total print volume, installation environment, image ratio, paper size, and paper type.

		CMP[83] Type 1	CMP[83] Type 2	CRD[84]
Usage Factors	**Monthly Print Volume**	100,000	160,000	100,000
	Print Volume Over a 5 Year Maintenance Agreement	6,000,000	9,600,000	6,000,000
	Color Ratio	80%		75%
	Large/Heavy Paper Ratio	80%		60%
		50%		30%
	Toner Coverage	10%		
	Media Type	100% Plain Paper		
Labor	**Work Time[85]**	108.8 minutes		137.2 minutes
	Travel Time[86]	30 Minutes		
Service	**Average CBV[87]**	38,822	46,611	60,098
	Visit Ratio[88]	2.576	2.433	1.664

83 CMP (Commercial Print).
84 CRD (Central Reproduction Department).
85 The Work Time (minutes per visits) is the average amount of time a service technician needs to service a machine. This number may vary, depending on the service technician's experience and the service required during each site visit.
86 The Travel Time (minutes per visits) is the average amount of time a service technician needs to travel from site to site. This number may vary, depending on the local service map.
87 The Average CBV (Copies Between Visits) is the estimated number of total sheets between service visits. The CBV takes into account all service visits throughout the term of the maintenance agreement. The actual CBV may vary, depending on the MCV (Monthly Copy Volume), large paper ratio, and service required.
88 The Visit Ratio is the estimated number of service visits per month.

14.2 Print Speed

The tables below describe the approximate printing speeds one should expect when printing one- or two-sided documents on the indicated paper size and type. Refer to the *Specialty Media Handling Guide* for supported media.

IMPORTANT

The print speeds below are shown in images per minute (ipm).

NOTE

Numbers in parentheses are for secondary transfer VB control mode.

Expected Print Speeds for the imagePRESS V1000: Face Up

Paper Type	Size	Weight (g/m^2)	Paper Source			
			Cassette	Bypass	POD Deck Lite/POD Deck Lite XL	Multi-Drawer Paper Deck
Thin 1 Plain 1-3 Thick 1-9[89] Color 1-2 Recycled 1-4 Bellum 1-3 Label 1[90] Bond 1-3 Pre-punched 1-2 Letterhead	LTR	52 – 220	101	81	101	101
		221 – 256	82	62	101	101
		257 – 300	54	46	80	101
		301 - 400	-	46	80	101
	LTRR	52 – 220	83	63	83	83
		221 – 256	64	48	83	83
		257 – 300	42	36	62	83
		301 - 400	-	36	62	83
	LGLR	52 – 220	63	49	63	63
		221 – 256	50	38	63	63
		257 – 300	33	28	49	63
		301 - 400	-	28	49	63
	11” x 17” R	52 – 220	52	40	52	52
		221 – 256	41	31	52	52
		257 – 300	27	23	40	52
		301 - 400	-	23	40	52
	12” x 18” R	52 – 220	50	38	50	50
		221 – 256	39	29	50	50
		257 – 300	25	22	38	50
		301 - 400	-	22	38	50

89 The Multi-Drawer Paper Deck only supports Thick 9 from the lower tray.
90 Label 1 is not supported by the engine cassettes.

Expected Print Speeds for the imagePRESS V1000: Face Up (cont'd)

Paper Type	Size	Weight (g/m^2)	Paper Source			
			Cassette	Bypass	POD Deck Lite/POD Deck Lite XL	Multi-Drawer Paper Deck
Thin 1 Plain 1-3 Thick 1-9[89] Color 1-2 Recycled 1-4 Bellum 1-3 Label 1[90] Bond 1-3 Pre-punched 1-2 Letterhead	13" x 19" R	52 – 220	50	36	50	50
		221 – 256	37	28	50	50
		257 – 300	24	20	36	50
		301 - 400	-	20	36	50
	30"	52 – 220	-	23	28	-
		221 – 256	-	17	28	-
		257 – 300	-	13	23	-
		301 - 400	-	13	23	-
	1,300 mm	52 – 220	-	13	-	-
		221 – 256	-	10	-	-
		257 – 300	-	7	-	-
		301 - 400	-	7	-	-
One-sided thin coated 1-3[91] Two-sided thin coated 1-3[91] One-sided coated 1-9[92] Two-sided coated 1-9[92] Matte Coated [91 92] Embossed 1-8 Transparent Film Translucent Film Synthetic (Polyester and Polypropylene)	LTR	52 – 220	-	-	101	101
		221 - 400	-	-	80 (79)	101
	LTRR	52 – 220	-	-	83 (81)	83 (81)
		221 - 400	-	-	62 (61)	83 (81)
	LGLR	52 – 220	-	-	63 (61)	63 (61)
		221 - 400	-	-	49 (48)	63 (61)
	11" x 17"	52 – 220	-	-	52 (51)	52 (51)
		221 - 400	-	-	40	52 (51)
	12" x 18"	52 – 220	-	-	50	50
		221 - 400	-	-	38 (37)	50
	13" x 19"	52 – 220	-	-	50 (49)	50 (49)
		221 - 400	-	-	36 (35)	50 (49)
	30"	52 – 220	-	-	28 (27)	-
		221 - 400	-	-	23 (22)	-
	1,300 mm	52 – 220	-	-	-	-
		221 - 400	-	-	-	-

89 The Multi-Drawer Paper Deck only supports Thick 9 from the lower tray.
90 Label 1 is not supported by the engine cassettes.

91 One-sided Thin Coat 3, Two-sided Thin Coat 3, and Matte Coated are not supported by the POD Deck Lite or POD Deck Lite XL.
92 The Multi-Drawer Paper Deck only supports One-sided Coated 9, Two-sided Coated 8, and Matte Coated from the lower tray.

Expected Print Speeds for the imagePRESS V1000: Face Up (cont'd)

Paper Type	Size	Weight (g/m^2)	Paper Source			
			Cassette	Bypass	POD Deck Lite/POD Deck Lite XL	Multi-Drawer Paper Deck
OHP	LTR	80 – 220	54	61	101	101
	LTRR	80 – 220	41	47	81	81
Postcard	Postcard	80 – 220	83	69	85	-
	2 Postcard	80 – 220	101	81	101	101
	4 Postcard	80 – 220	101	81	101	101
Tab 1-2	LTR	64 – 220	98	76	98	98
Envelope	Monarch	106 - 220	66	49	83	83
	DL	106 – 220	64	48	81	81
	ISO-C5	106 – 220	55	42	71	71
	COM10	106 - 220	55	42	71	71

Expected Print Speeds for the imagePRESS V1000: Face Down

Paper Type	Size	Weight (g/m^2)	Paper Source			
			Cassette	Bypass	POD Deck Lite/POD Deck Lite XL	Multi-Drawer Paper Deck
Thin 1 Plain 1-3 Thick 1-9[89] Color 1-2 Recycled 1-4 Bellum 1-3 Label 1[90] Bond 1-3 Pre-punched 1-2 Letterhead	LTR	52 – 220	101	81	101	101
		221 – 256	82	62	101	101
		257 – 300	54	46	80	101
		301 - 400	-	46	80	101
	LTRR	52 – 220	83	63	83	83
		221 – 256	64	48	83	83
		257 – 300	42	36	62	83
		301 - 400	-	36	62	83
	LGLR	52 – 220	63	49	63	63
		221 – 256	50	38	63	63
		257 – 300	33	28	49	63
		301 - 400	-	28	49	63
	11” x 17”	52 – 220	52	40	52	52
		221 – 256	41	31	52	52
		257 – 300	27	23	40	52
		301 - 400	-	23	40	52
	12” x 18”	52 – 220	50	38	50	50
		221 – 256	39	29	50	50
		257 – 300	25	22	38	50
		301 - 400	-	22	38	50
	13” x 19”	52 – 220	50	36	50	50
		221 – 256	37	28	50	50
		257 – 300	24	20	36	50
		301 - 400	-	20	36	50
	30”	52 – 220	-	-	-	-
		221 – 256	-	-	-	-
		257 – 300	-	-	-	-
		301 - 400	-	-	-	-
	1,300 mm	52 – 220	-	-	-	-
		221 – 256	-	-	-	-
		257 – 300	-	-	-	-
		301 - 400	-	-	-	-

89 The Multi-Drawer Paper Deck only supports Thick 9 from the lower tray.
90 Label 1 is not supported by the engine cassettes.

Expected Print Speeds for the imagePRESS V1000: Face Down (cont'd)

Paper Type	Size	Weight (g/m^2)	Paper Source			
			Cassette	Bypass	POD Deck Lite/POD Deck Lite XL	Multi-Drawer Paper Deck
One-sided thin coated 1-3[91]	LTR	52 – 220	-	-	101	101
Two-sided thin coated 1-3[91]		221 - 400	-	-	80 (79)	101
	LTRR	52 – 220	-	-	83 (81)	83 (81)
One-sided coated 1-9[92]		221 - 400	-	-	62 (61)	83 (81)
	LGLR	52 – 220	-	-	63 (61)	63 (61)
Two-sided coated 1-9[91]		221 - 400	-	-	49 (48)	63 (61)
	11" x 17"	52 – 220	-	-	52 (51)	52 (51)
Matte Coated[91 92]		221 - 400	-	-	40	52 (51)
	12" x 18"	52 – 220	-	-	50	50
Embossed 1-8		221 - 400	-	-	38 (37)	50
	13" x 19"	52 – 220	-	-	50 (49)	50 (49)
Transparent Film		221 - 400	-	-	36 (35)	50 (49)
	30"	52 – 220	-	-	-	-
Translucent Film		221 - 400	-	-	-	-
	1,300 mm	52 – 220	-	-	-	-
Synthetic (Polyester and Polypropylene)		221 - 400	-	-	-	-
OHP	LTR	80 – 220	-	-	-	-
	LTRR	80 – 220	-	-	-	-
Postcard	Postcard	80 – 220	83	69	85	-
	2 Postcard	80 – 220	101	81	101	101
	4 Postcard	80 – 220	101	81	101	101
Tab 1-2	LTR	64 – 220	98	76	98	98
Envelope	Monarch	106 - 220	-	-	-	-
	DL	106 – 220	-	-	-	-
	ISO-C5	106 – 220	-	-	-	-
	COM10	106 - 220	-	-	-	-

91 One-sided Thin Coat 3, Two-sided Thin Coat 3, and Matte Coated are not supported by the POD Deck Lite or POD Deck Lite XL.

92 The Multi-Drawer Paper Deck only supports One-sided Coated 9, Two-sided Coated 8, and Matte Coated from the lower tray.

Expected Print Speeds for the imagePRESS V1000: Duplex

Paper Type	Size	Weight (g/m^2)	Paper Source			
			Cassette	Bypass	POD Deck Lite/POD Deck Lite XL	Multi-Drawer Paper Deck
Thin 1 Plain 1-3 Thick 1-9[89] Color 1-2 Recycled 1-4 Bellum 1-3 Label 1[90] Bond 1-3 Pre-punched 1-2 Letterhead	LTR	52 – 220	100	80	102	100
		221 – 256	100	62	102	100
		257 – 300	100	46	80	100
		301 - 400	-	46	80	100
	LTRR	52 – 220	82	62	82	82
		221 – 256	82	48	82	82
		257 – 300	82	36	62	82
		301 - 400	-	36	62	82
	LGLR	52 – 220	62	48	62	62
		221 – 256	62	38	62	62
		257 – 300	62	28	48	62
		301 - 400	-	28	48	62
	11” x 17”	52 – 220	52	40	52	52
		221 – 256	52	30	52	52
		257 – 300	50	22	40	52
		301 - 400	-	22	40	52
	12” x 18”	52 – 220	50	38	50	50
		221 – 256	50	28	50	50
		257 – 300	48	22	38	50
		301 - 400	-	22	38	50
	13” x 19”	52 – 220	48	36	48	48
		221 – 256	48	28	48	48
		257 – 300	48	20	36	48
		301 - 400	-	20	36	48
	30”	52 – 220	-	22	24	-
		221 – 256	-	16	26	-
		257 – 300	-	12	22	-
		301 - 400	-	12	22	-
	1,300 mm	52 – 220	-	12	-	-
		221 – 256	-	10	-	-
		257 – 300	-	6	-	-
		301 - 400	-	6	-	-

89 The Multi-Drawer Paper Deck only supports Thick 9 from the lower tray.
90 Label 1 is not supported by the engine cassettes.

Expected Print Speeds for the imagePRESS V1000: Duplex (cont'd)

Paper Type	Size	Weight (g/m^2)	Paper Source			
			Cassette	Bypass	POD Deck Lite/POD Deck Lite XL	Multi-Drawer Paper Deck
One-sided thin coated 1-3[91] Two-sided thin coated 1-3[91] One-sided coated 1-9[92] Two-sided coated 1-9[91] Matte Coated[91 92] Embossed 1-8 Transparent Film Translucent Film Synthetic (Polyester and Polypropylene)	LTR	52 – 220	-	-	100	100
		221 - 400	-	-	80 (78)	100
	LTRR	52 – 220	-	-	82 (80)	82 (80)
		221 - 400	-	-	62 (60)	82 (80)
	LGLR	52 – 220	-	-	62 (60)	62 (60)
		221 - 400	-	-	48	62 (60)
	11" x 17"	52 – 220	-	-	52 (50)	52 (50)
		221 - 400	-	-	40 (38)	52 (50)
	12" x 18"	52 – 220	-	-	50 (48)	50 (48)
		221 - 400	-	-	38 (36)	50 (48)
	13" x 19"	52 – 220	-	-	48	48
		221 - 400	-	-	36 (34)	48
	30"	52 – 220	-	-	24	-
		221 - 400	-	-	22	-
	1,300 mm	52 – 220	-	-	-	-
		221 - 400	-	-	-	-
OHP	LTR	80 – 220	-	-	-	-
	LTRR	80 – 220	-	-	-	-
Postcard	Postcard	80 – 220	84	69	84	-
	2 Postcard	80 – 220	100	80	100	100
	4 Postcard	80 – 220	100	80	100	100
Tab 1-2	LTR	64 – 220	-	-	-	-
Envelope	Monarch	106 - 220	-	-	-	-
	DL	106 – 220	-	-	-	-
	ISO-C5	106 – 220	-	-	-	-
	COM10	106 - 220	-	-	-	-

91 One-sided Thin Coat 3, Two-sided Thin Coat 3, and Matte Coated are not supported by the POD Deck Lite or POD Deck Lite XL.

92 The Multi-Drawer Paper Deck only supports One-sided Coated 9, Two-sided Coated 8, and Matte Coated from the lower tray.

IMPORTANT

The copy/print speeds in the tables above may not be achieved if the user copies/prints in the conditions below:

- If a job uses different paper types and weights.
- If a job includes simplex and duplex print requirements.
- If a job includes a cover or insertion from the insertion unit.
- If a job uses long sheets from the BDT Long Sheet Feeder.
- If a job uses different paper sizes.
- If a job uses a mix of staples and non-staples.
- If a job averages less than 2% density for each color.

14.3 Mixed Media Productivity

The imagePRESS V1000 is capable of processing jobs that contain mixed media; however, the machine's productivity may be reduced if one or more of the following print conditions occur during a job run:

- Using paper with different paper weights
- Using paper with different paper sizes
- Using single and double-sided printing
- Inserting tab paper
- Inserting paper from the Document Insertion Unit-R1
- Using different image magnifications for both sides of a sheet
- The amount of paper in the Multi-Drawer Paper Deck-E1 falls below 100 sheets
- Saddle-folding only one sheet
- Stapling heavy paper
- A large print job is running and the finisher switches from the tray that is full to another tray.

14.4 Paper and Toner Replacement

The imagePRESS V1000 operator can maintain productivity by removing, replacing, and refilling the paper while the machine is running.

The paper trays can also be opened and refilled during operation; however, the tray that is being used by the machine during production is locked. Once the job completes, or the machine switches to another tray, the empty tray unlocks, which enables the operator to prepare for the next job, and add more paper. No productivity is affected, and jobs finish faster.

Similar to the paper, the toner bottle may be removed and replaced while a job is printing. The imagePRESS V1000 has a large toner hopper, making it possible for the machine to run much longer without replacing the toner bottle right away. Therefore, productivity and image quality are not affected, and jobs finish in the same amount of time.

Finally, the waste toner bottle is required to be replaced when full. However, this bottle may be removed while the machine is running. Therefore, the operator will remain productive, and not notice any changes in speed or quality.

15. Media Usage/Compatibility

The imagePRESS V1000 maintains reliable, predictable, and high-quality output. Consistency of the output is dependent on knowing and compensating for variables of a print job. The imagePRESS V1000 incorporates many control systems, which compensate for environmental and print process conditions. Another variable is the print media. Knowing the characteristics of the media facilitates optimal print output.

15.1 Media Characteristics by Media Library Parameters

The system administrator must be in the Management mode to edit the media characteristics.

Characteristics	Parameters
Name	Set the name of the media.
Basis Weight	Set the basis weight of the paper
Size	Select the size of the paper from the drop-down list, including custom size paper.
Finish	Set the surface texture of the paper
Curl correction level	Adjust the curl correction level for the paper type
Adjust Secondary Transfer Voltage	Adjust the Secondary Transfer Voltage (the voltage that transfers toner to the paper) when image blurring occurs
Adjust image position	Adjust the printed image position on the paper, or correct misalignment and distortion
Adjust Page Interrupt Level	Set the interval for automatic adjustment (the interval for adjustment page interruption)
Type	Set the brand name of the paper.
Color	Specify the color of the paper. This setting acts as an identifier to display the color of the paper on the operation panel.
Second side of two-sided page	Specify whether the back (second) side of the media is previously printed or not
Creep correction	Change the creep (displacement) correction for each page in a booklet
Adjust Paper Separation Fan Level	Adjust the level of paper separation fan for registered paper types (when using the POD Deck Lite-C1 or Multi-drawer Paper Deck-E1)
Adjust Paper Curve	The paper curve is a deflection which occurs in paper when adjusting the image position. If the printed image is skewed, the output paper is creased, or the lead edge/tail end of the paper is curled, you may be able to correct them by adjusting the setting value of the paper curve.
Adjust Paper Realignment Speed	If the paper realignment speed is not appropriate, the printed image may become rough or color on the tail end of the paper may change. You can adjust the paper realignment speed according to the image problem.
Adjust lead/tail margins	For some paper types, small margins make it harder to remove the paper from the fixing unit roller surface. That can result in folded/bent corner, paper feed issues, and decreased print quality.
Toner Amount Reduction Mode	Adjust the total amount of toner used for each paper type.

Characteristics	Parameters
Adjust Antistatic Bias	Adjust the antistatic bias to <-> side in order to remove the static electricity
Adjust ITB Image Clearing	Adjust the image clear level of the ITB for the custom paper type
Adjust Gloss/Fine Black	Adjust the glossiness and fine black of the custom paper type
Change Fold/Stitch Position	Change the saddle stitch position of the registered custom paper type (when using Booklet Finisher-AF1)
Adjust Saddle Stitch Fold Position	Change the fold position of the registered custom paper type (when using Booklet Finisher-AF1)
Adjust Saddle Fold Position	Change the saddle fold position of the registered custom paper type (when using Booklet Finisher-AF1)
Adjust Hole Punch Position	Change the hole punch position of the registered custom paper type
Correct Tail End Toner Application	When curled paper or paper susceptible to curling is used for two-sided copying/printing, toner may not be adequately applied or the color may become faint on the tail end (from the feeding direction) of the paper
Adjust Fixing Speed	Adjust the fixing speed when using long originals, paper which has absorbed moisture, or thin paper, to improve paper creasing and curled edges
Adjust Fixing Pressure	Adjust the fixing Pressure when using long originals, paper which has absorbed moisture, or thin paper, to improve paper creasing and curled edges
Auto Adjust L/R Edge Alignment	Prevent the printed image from being misaligned vertically as seen from the paper feeding direction
Adjust Fan for Paper Conveyance	If a paper jam often occurs or the output paper is creased and it has a wave like appearance, you may be able to solve the problem by increasing the fan level for paper conveyance before fixation
Detect Multiple Sheet Feed	Enable multiple sheet feed detection
Paper Fiber Direction Settings	Set the fiber direction to reduce jams
Adj. Lead Edge Sec. Transfer Volt.	Change the leading edge secondary transfer voltage (the voltage when transferring the toner image to the paper) of the registered custom paper
Adj. Paper Convey. Before Fixation	If image problems or paper jams occur while printing, adjusi the paper feeding speed in the area before toner fixation
Adj. Ppr. Convey. in Inv./Outp. Area	If image problems or paper jams occur while printing, adjust the paper feeding speed in the duplexing/output area
Use as Template Paper	Set this mode to <On> to use preprinted paper (paper which has logos already printed on it), such as a letterhead
Adjust Temp. to Prevent Wrinkles	Change the wrinkle correction level in the registered user settings if wrinkles appear or the paper seems thin and worn
Embossing Depth	Select <Deep> when printing on textured paper that has significant unevenness
Sec. Transfer Roller Pos. Settings	If a paper jam occurs at the secondary transfer roller, there are uneven densities that scratch in the entire halftone image, or there are horizontal streaks of uneven densities at the front or rear end, the condition may be improved by configuring the secondary transfer roller position settings.

15.2 Image Quality Adjustment Settings

The Image Quality Adjustment settings are for customers who want to make fine adjustments to the printed image. The Image Quality Adjustment settings must be enabled by a service technician. For more information on specifying the Image Quality Adjustment settings, see the Operation Information User Manual included with the machine.

The following settings can be adjusted through the Settings/Registration > Adjustment/Maintenance > Adjust Image Quality menu:

- Automatic gradation adjustment
- Density correction
- Color mismatch correction
- Zoom fine adjustment
- Color balance
- White gap correction
- Adjust fixing unit temperature
- Uneven gloss correction
- Special smoothing
- Adjust gradation during printing
- Shading correction
- Make color more vivid
- Dither settings
- Color cast correction
- Uneven image gloss correction (duplex)
- Low temperature environment mode
- Adjust drum temperature
- Tail-end toner application correction

15.3 Action Adjustment Settings

The Action Adjustment settings are for customers who want to make fine adjustments to the copy and print finish settings. The Action Adjustment settings must be enabled by a service technician. For more information on specifying the Action Adjustment settings, see the Operation Information User Manual included with the machine.

The following settings can be adjusted through the Settings/Registration > Adjustment/Maintenance > Adjust Action menu:

- Saddle stitch staple repositioning
- Saddle stitch fold placement adjustment
- Speed/-precision priority for double staple
- Perfect binding finishing size fine adjustment
- Adjusting the paper folding position
- Paper alignment when stapling
- Changing the finisher output priority settings (thin)
- Change fold/stitch position
- Start key touch recognition delay
- Double staple width adjustment
- Adjusting the trimming width
- Adjusting the amount of glue for perfect binding
- Curl correction for each paper deck
- Paper alignment on finisher tray A/B
- Switch saddle fold mode
- Color/B&W priority for first print time

15.4 Paper Handling and Storage

- The permissible humidity range for paper storage is 30% to 70% (with a room temperature of 68°F to 80.6°F (20°C to 27°C)). Storing paper in a location that does not meet these specifications may affect paper feeding and image quality.
- Only use paper that has fully acclimatized to the environment in which the machine is installed. Using paper that has been stored in a different environment (with a different temperature and humidity), may cause paper jams or result in poor print quality.
- We recommend using paper immediately after opening the package. Rewrap any remaining paper in its original package, and store it on a flat surface.
- Before loading paper, make sure to fan the sheets thoroughly so that air runs through the sheets, as shown in the diagrams below.

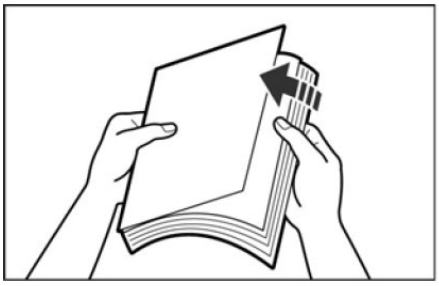

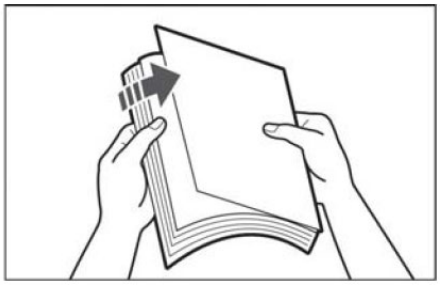

- When you cut paper, the cutting sides of the paper must be made smooth. Use an abrasive to make the four cutting sides smooth. Otherwise, streaks may appear on the image, paper feeding may be affected, part life may be reduced, or service calls may increase. Make sure to put the paper on a flat table to use the abrasive, and move the abrasive perpendicular to the paper approximately three times.

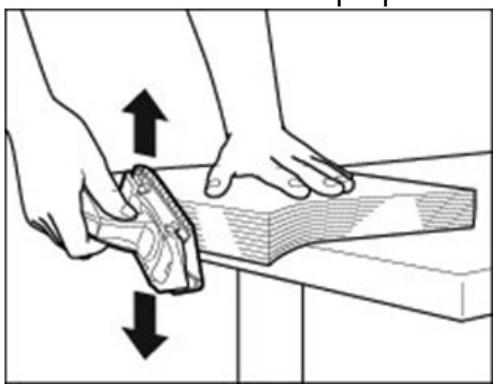

15.5 Paper Grain and Curl

Paper grain and curl can dramatically affect the reliability of machines that use an electrostatic process, like the imagePRESS V1000. It is recommended to use paper that is cut for long edge feeding (electrostatic paper). The composition of electrostatic paper produces better quality results in a digital machine. Therefore, when selecting paper for the imagePRESS V1000, select paper intended for use in electrostatic machines, such as laser printers and copiers.

If paper jams or poor print quality occur when paper is fed from the multi-purpose tray or optional paper deck, paper curl is often the cause. The paper stiffness, direction of curl, and amount of curl has a strong influence on how well the paper is transported through the machine. If paper is curled, straighten out the paper by gently curling it in the opposite direction to which it is curled.

Paper stiffness depends on the direction of the paper grain. Paper tends to curl in the direction parallel to the grain.

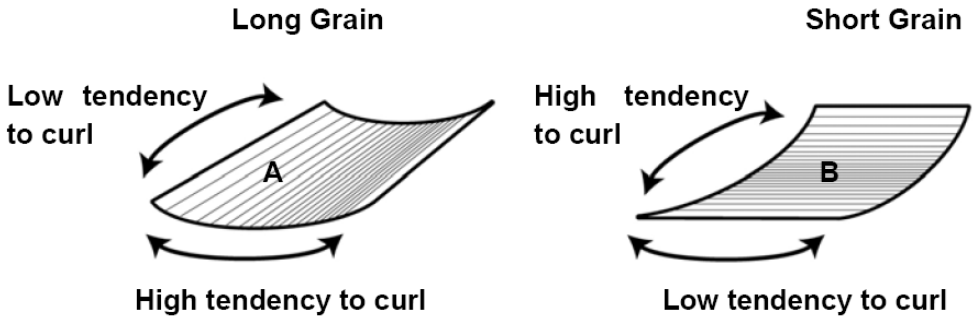

IMPORTANT

- When using LTR or smaller paper sizes we recommend using paper with a grain parallel to the long edge (A). For paper sizes larger than 11” x 17”, we recommend using paper with a grain parallel to the short edge (B). When using coated paper thinner than 105 g/m^2, we recommend using paper with a grain perpendicular to the feeding direction of the paper.
- For more information on the correct direction to load paper, check the label on the paper package.

15.6 Note for Customers Who Cut Their Own Paper

Customers who cut their own paper may experience:

- An increase of paper dust in the machine
- Shortening the life of the machine's fixing rollers due to excessive wear from the rough side of the cut paper
- Paper jams due to paper dust getting into areas of the machine where it is not meant to be
- Improper paper feeding
- Paper registration inaccuracies

Follow the precautions below to minimize the above issues:

- Have a process in place to regularly make sure that the cutting blades are sharpened, and that cuts are made as clean as possible.
- Place the paper with the factory mill cut sides facing to the right (leading edge), and to the front of the machine.
- Pay special attention to the paper grain orientation when cutting it. For more information on paper grain, see "Paper Grain and Curl," on p. 120.
- The best results for consistency and front to back registration are obtained by using factory mill cut, digital compatible paper.

15.7 Media Sizes and Feed Location Chart

As with all Canon copiers, certain feed locations within the device are capable of feeding specific media sizes, types, and weights.

When considering media, make sure the media is within the proper size and weight parameters of the feed location. Once the desired media is selected, select the appropriate feed location.

The table below represents the available paper sizes and feed locations. The Stack Bypass, POD Deck Lite, POD Deck Lite XL, Multi-Drawer Paper Deck, and Document Insertion Unit are optional.

✓: Available – : Unavailable

Paper Sizes		Paper Source (Standard)	Paper Source (Optional)				
Paper Size	**Width x Length**	**Paper Deck of the Main Unit**	**Stack Bypass**	**POD Deck Lite**	**POD Deck Lite XL**	**Multi-Drawer Paper Deck**	**Document Insertion Unit**
12” x 18”	12” x 18”	✓	✓	✓	✓	✓	✓
13” x 19”	13” x 19”	✓	✓	✓	✓	✓	✓
LTR	8 1/2” x 11”	✓	✓	✓	✓	✓	✓
LTRR	11” x 8 1/2”	✓	✓	✓	✓	✓	✓
LGL	8 1/2” x 14”	✓	✓	✓	✓	✓	✓
11” x 17”	11” x 17”	✓	✓	✓	✓	✓	✓
STMTR	5 1/2” x 8 1/2”		✓	✓	✓	✓	
EXEC	7 1/4” x 10 1/2”	✓	✓	✓	✓	✓	✓
Custom Size	3 7/8” x 5 7/8” to 13” x 19 1/4” (98 mm x 148 mm to 330.2 mm x 487.7 mm)	✓	✓	✓[93]	✓[93]	✓[94]	✓[95]
Custom Size	8 1/4" x 19 1/4" to 13” x 51 1/8” (210 mm x 487.8 mm to 330.2 mm x 1,300 mm)		✓[96]		✓[97]		
Envelope	COM10	✓[98]	✓	✓[99]	✓[99]	✓[100]	
	ISO-C5	✓	✓	✓[99]	✓[99]	✓[100]	
	DL	✓[98]	✓	✓[99]	✓[99]	✓[100]	
	Monarch	✓[98]	✓	✓[99]	✓[99]	✓[100]	

93 Custom paper sizes can only be fed if they are between 139.7 mm x 148.0 mm to 330.2 mm x 487.7 mm.
94 Custom paper sizes can only be fed if they are between 139.7 mm x 182.0 mm to 330.2 mm x 487.7 mm.
95 Custom paper sizes can only be fed if they are between 182 mm x 182 mm to 330.2 mm x 487.7 mm.
96 When the Long Sheet Tray is attached.
97 Custom paper sizes can only be fed if they are between 210 mm x 487.8 mm to 330.2 mm x 762 mm.
98 The optional Envelope Feeder Attachment-F1 is required.
99 The optional Envelope Feeder Attachment-G1 is required.
100 The optional Envelope Feeder Attachment-H1 is required.

16. Responsibility Matrix

Action	Responsibility	
	Customer	Dealer
Ensure adequate space and power to properly install the machine.		
Verify floor strength and level.		
Make sure the installation site meets the optimal environmental specifications.		
Ensure that the equipment can be delivered to the site, and that the path is clear and unobstructed.		
Unpack all delivered items.		
Install all system hardware.		
Connect all system components.		
Install printer files and server.		
Ensure network configuration, and confirm that the device is attached to the network.		
Install client workstation network software.		
Order and replace, as necessary, replaceable items (i.e., drum and toner).		
Order and replace the waste toner container, as necessary.		
Provide technical support.		
Provide on-site support.		
Establish an installation file of a typical job, and retain for future reference.		
Perform an Auto Gradation Adjustment, as needed.[101]		
Back up important data, such as Inbox and Address Book contents on the machine's hard drive periodically.		
Secure data stored on hard drives and in the Advanced Box.		
Store the TPM encryption key (if the TPM setting is set to 'On').		

Primary customer applications for using this equipment:

_____

_____

_____

_____

Special considerations or performance limitations:

_____

_____

_____

_____

I have received a copy of this document.

_____

Customer: _____

Sales Person: _____

101 For more information, see "Adjustment/Maintenance," in the *Settings/Registration e-Manual* included with the machine.