INTERPOLATOR

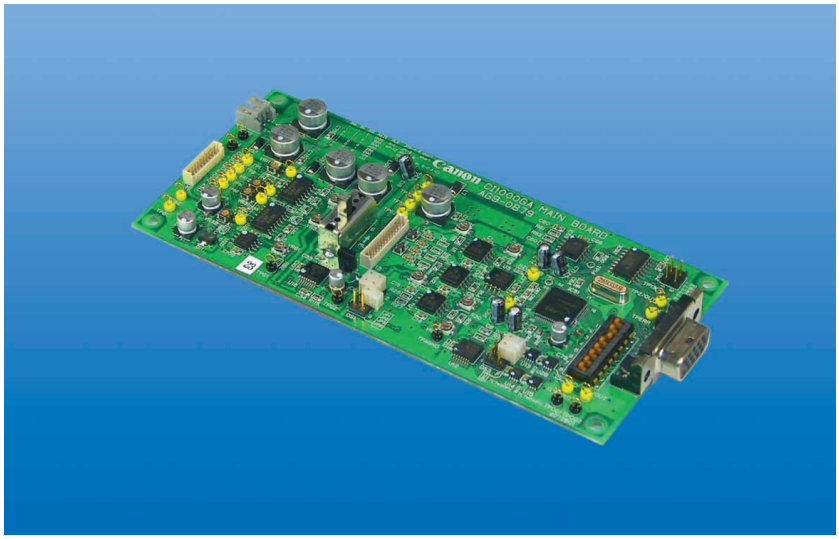

COMBINATION EXAMPLES

Encoder	Signal type	Interpolator	Counter *1	Final resolution
Rotary Encoder				
R-1O			Counter	4 arc-sec
R-1L	Balance		Counter	4 arc-sec
M-1	Balance		Counter	6.48 arc-sec
K-1		CI16-2 / IU-16		1 arc-sec
X-1M	Balance	CI-200GA		0.0288 arc-sec
		CI-1000GA		0.00576 arc-sec
KP-1Z	Balance	CI-200GA	Counter	0.08 arc-sec
		CI-1000GA		0.016 arc-sec
Linear Encoder				
ML-08, ML-16	Balance		Counter	ML-08:0.2µm, ML-16:0.4µm
	Balance	CI-200GA	Counter	ML-08:4nm, ML-16:8nm
		CI-1000GA		ML-08:0.8nm, ML-16:1.6nm
ML-08/80, ML-16/80	Balance		Counter	ML-08/80:0.01µm, ML-16/80:0.02µm

*1 Counter: Ordinary 4-fold counter circuit which can count the pulse edge of two phase encoder signal.

CI16-2

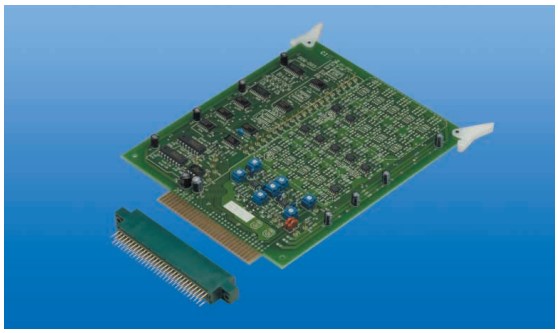

1,296,000 pulses per revolution output with K-1 encoder

- **High speed input response frequency : 500kHz**
- **The UP/DOWN pulse output can be counted easily using a general purpose up/down counter IC.**
- **Two phase square wave signal output (PCA, PCB) can be connected directly to NC machine tools.**
- **Differential line Driver output.**

SPECIFICATIONS

■Input signals
Canon encoder A phase, B phase sine wave signal :
standard voltage $1V_{p\text{-}p}$ (no load, output impedance110Ω)
Canon encoder Z phase input signals :
Open corrector or Balanced Line Driver

■Output signals
Up pulse : Output when A phase leads B phase
Down Pulse : Output when B phase leads A phase
Pulse width : 70±20nsec (can be changed to 30±10nsec)
A phase B phase rectangle signal : divided rectangle signal (PCA, PCB)
The phase relation is dependent on input signals.
Z phase signal pulse width (PCZ+, PCZ-) :
330±80μm (can be changed)

■Output type: Differential line drivers
■Input signals response frequency: 500kHz max.
■Division accuracy: One cycle of the encoder output is "a", the interval of adjoining pulse is $\frac{a}{16}\left(1 \pm \frac{1}{4}\right)$
■Voltage: DC±5V ±5%
■Current: +5V : 500mA max. -5V : 100mA max.
■DC characteristics: High level : V_{OH} : 2.5Vmin
Low Level : V_{OL} : 0.5Vmax
(when load current are 20mA for each)
■Operating temperature: 0 to 50˚C
■Storage temperature: -30 to 80˚C

CONNECTOR TERMINAL NUMBER AND FUNCTION

Terminal	Signal	Function	IN/OUT
1A, B 2A, B	GND	Power supply GND	IN
3A, B 4A, B	+5V	+5V power supply input	IN
5A, B 6A, B	-5V	-5V power supply input	IN
7A, B	PCZ+	Z phase square wave signal	OUT
8A, B	PCZ-		
9A, B	DOWN+	Down pulse signal	OUT
10A, B	DOWN-		
11A, B	UP+	Up pulse signal	IN
12A, B	UP-		
13A, B	GND	Signal ground	OUT

*Connector : KEL4630-060-038 (attached)

Terminal	Signal	Function	IN/OUT
14A, B	PCA+	A phase square wave signal after division	OUT
15A, B	PCA-		
16A, B	PCB+	B phase square wave signal after division	OUT
17A, B	PCB-		
18A, B ⋮ 22A, B	NC		
23A	Z. SEL	Z phase selection	IN
24A, B	Z-	Z- phase signal (line driver type)	IN
25A, B	GND	Signal ground	IN
26A, B	Z+	Z phase signal	
27A, B	GND	Analog ground (paired with B)	IN
28A, B	B	Encoder B phase sine wave signal	
29A, B	GND	Analog ground (paired with A)	IN
30A, B	A	Encoder A phase sine wave signal	

EXTERNAL DIMENSIONS

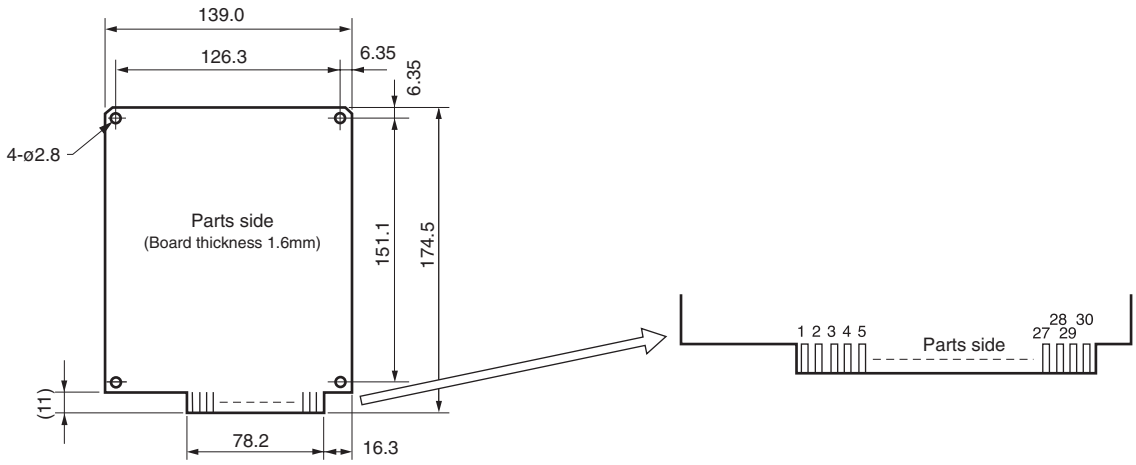

IU-16

Electric interpolator unit includes power supply

- **Maximum frequencies of input signals are IU-40 : 300kHz, IU-16 : 500kHz.**
- **A phase B phase square wave signal output (PCA,PCB) and UP/DOWN pulse output function are equipped.**
- **Differential line Driver output.**

SPECIFICATIONS

■Input signals: Canon encoder A phase, B phase sine wave signal and Z phase pulse signal

■Output signals: Up pulse : Output when A phase leads B phase
Down Pulse : Output when B phase leads A phase
Pulse width : 70±20nm (can be changed to 30±10nm)
A phase B phase rectangle signal : divided rectangle signal (PCA, PCB)
The phase relation is dependent on input signals.
Z phase signal pulse width (PCZ+, PCZ-) :
330±80μm (can be changed)

■Output type: Differential line drivers

■Output voltage: High : 2.5Vmin., Low : 0.5Vmax (with load current 20mA)

■Input signals response frequency
IU-16 : 500kHz max., IU-40 : 300kHz max.

■Division accuracy: One cycle of the encoder output is "a", the interval of adjoining pulse is (1±1/4)·a/N.
"N" is division number 16 or 40.
The accuracy can not be guaranteed when the division number over the encoder's guaranteed division number. (for instance, 16 division is maximum for K-1 encoder)

■Voltage: AC90~132V, 50~60Hz

■Power consumption: 18W max.

■External dimensions: 180 (W) x 285 (D) x 70 (H) mm

■Attachment: AC power cord (2m)

ENVIRONMENTAL SPECIFICATIONS

■Operating temperature: 0 to 50˚C

■Storage temperature: -20 to 70˚C

CONNECTOR TERMINAL NUMBER AND FUNCTION

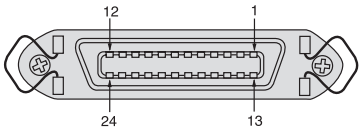

Recommended plug
shield type : 57FE-30240-2ON (D8)
no shield type : 57FE-30240-2OS (DDK)

Pin No.	Function	Pin No.	Function	Remark
1	PCA+	13	PCA-	2 phase rectangle signal after divided
2	PCB+	14	PCB-	
3	PCZ+	15	PCZ-	Z phase pulse signal
4	GND	16	GND	Signal ground
5	UP+	17	UP-	UP/DOWN pulse after divided
6	DOWN+	18	DOWN-	
7	GND	19	GND	Signal ground
8 ⋮ 12	NC	20 ⋮ 24	NC	No connection

EXTERNAL DIMENSIONS

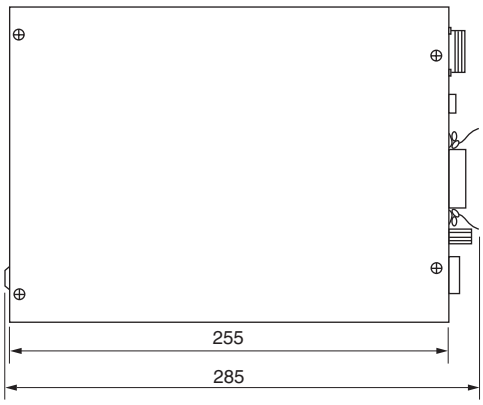

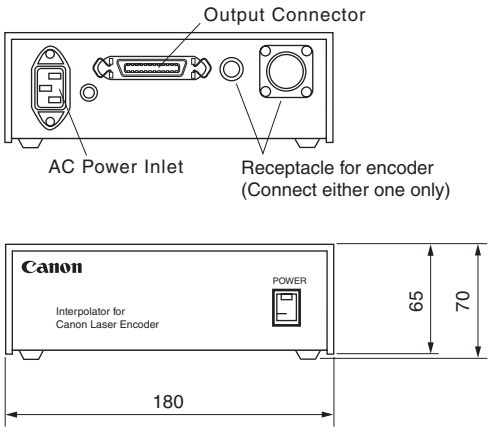

CI-200GA
CI-1000GA

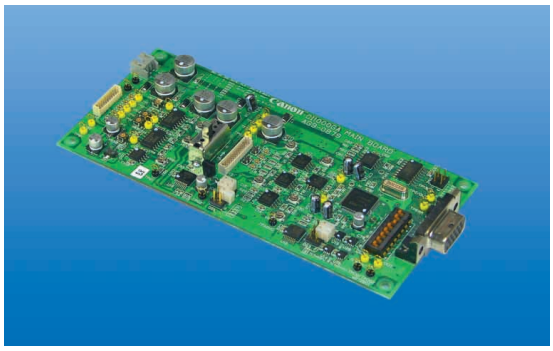

Adapted from low resolution to high resolution available

- **Equipped with DC offset and gain automatic correction functions.**
- **8 possible settings for the number of divisions.**
- **Equipped with digital filters**

SPECIFICATIONS

■Input signals
Canon encoder A phase, B phase sine wave signal and Z phase signal

■Number of divisions
200, 160, 100, 80, 50, 40, 25, 20 - fold (CI-200GA)
1000, 800, 500, 400, 250, 200, 125, 100 - fold (CI-1000GA)

■Maximum frequency response
~330kHz (CI-200GA)
~100kHz (CI-1000GA)
Note) The response frequency varies depending on the number of divisions

■Output signals
① PCA and PCB rectangular signals after divisions are made: Line driver output
② Up/down pulse: Line driver output (CI-1000GA only)
(Up/down PCA, PCB rectangular waves are switched by the dip switch on the board.)
③ Z phase square wave signal : Line driver output
④ Alarm : Line driver output (output when the encoder signal fails and when the maximum response frequency is exceeded.)
⑤ LD Alarm : Open corrector (notice of time for LD exchange)

■Filter function
① Gridge filter
② Output pulse interval time-setting function
(switching between "1" and "2" is by the dip switch on the board)

■Power DC+5V ±5% 200mA max
DC-5V ±5% 50mA max

■External dimensions 140 x 65 mm

■Attachment Power cable, rotary encoder connection cable, D-sub mini15pin connector

ENVIRONMENTAL SPECIFICATIONS

■Operating temperature 0 to 50˚C
■Operating humidity 90%RH or less (no condensation)
■Storage temperature -20 to 70˚C

CONNECTOR TERMINAL NUMBER AND FUNCTION

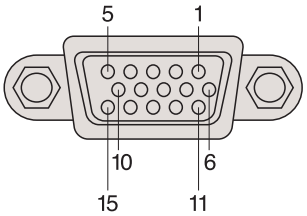

Plug : KSEY-15S-3B6L19-13(made by J.S.T.Co.)

Pin No.	Item	Description
1	PCA- / UP-	Either A- phase square wave signal or UP-
2	PCA+ / UP+	Either A+ phase square wave signal or UP+
3	PCB- / DOWN-	Either B- phase square wave signal or DOWN-
4	PCB+ / DOWN+	Either B+ phase square wave signal or DOWN+
5	PCZ-	Z- phase square wave signal
6	PCZ+	Z+ phase square wave signal
7	ERR+	Encoder error signal
8	ERR-	Encoder error signal phase difference
9	RES+	Reset signal input terminal
10	D-GND	Digital ground
11	LD-ARM	Laser diode alarm
12~15	NC	No connection

(CI-2000GA does not have UP/DOWN pulse output function.)

EXTERNAL DIMENSIONS