# AIR BEARING

## Rotation Precision Exceeding Sub-Microns, High Rigidity, High Endurance — Canon's Air Bearings Have Them All

**Canon's air bearings, developed originally as a key component in super-high precision manufacturing technology, have a special structure that gives them superior characteristics such as high rigidity, high precision, and high endurance.**

### Motion Precision, Reproducibility Comparison

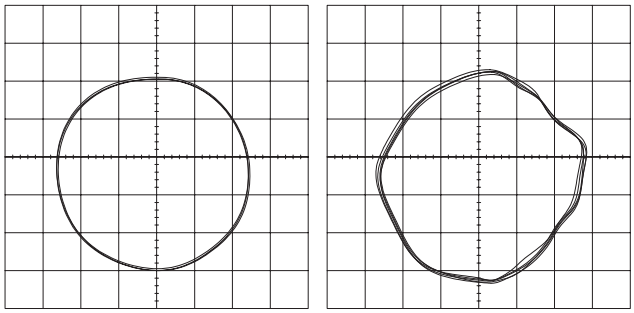

Air bearing (1mm/div)　　Ball bearing (1mm/div)

Rotational precision (15-rotation component)

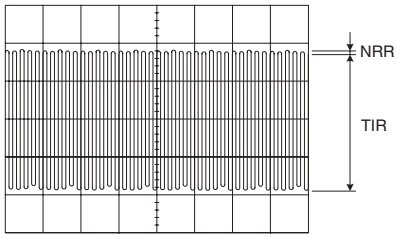


Air bearing with Canon motor (0.05µm/div)
NRR=0.01µm　N=3500rpm

The rotation precision of an air bearing is designed to be 0.05µm maximum, much more precise than ball bearings. Another factor that is crucial in achieving high precision is that the reproducibility be 0.01µm maximum and that this value can be maintained.

Canon's air bearings use porous chokes in their bearings, so even under normal factory supply-air pressure (490 kpa), they are sufficiently rigid for common use. Compared with bearings with orifice chokes and self-formed chokes, the rigidity per unit area is higher, the flow consumption is about ten times (one digit) smaller, and the damping capacity is also higher than that of bearings with other types of chokes.

## General Characteristics Compared for Various Bearings

| | Air Bearing | Ball bearing | Hydrostatic bearing |
|---|---|---|---|
| Advantages | ●High rotation precision, no deterioration<br>●Little friction; little temperature increase<br>●No vibration source<br>●Wide range of operational temperature; clean operation<br>●Capable of high-speed rotation<br>●No stick slip | ●Standardized<br>●Low cost<br>●Strong against collision impact | ●High rotation precision, no deterioration<br>●No vibration source<br>●High rigidity and damping capacity<br>●Strong against collision impact<br>●No stick slip |
| Disadvantages | ●Weak against collision impact<br>●An external auxiliary unit (air-cleaning unit) is necessary<br>●High cost | ●Low rotation precision, deteriorates<br>●Becomes a vibration source<br>●Friction; temperature increase | ●High-speed rotation leading to significant temperature increase<br>●Oil deteriorates and gets polluted<br>●An external auxiliary unit (hydraulic generator) is necessary<br>●High cost |

## SPECIFICATIONS TABLE

Air Pressure 490kpa (5kgf/cm²)

| | | AB-30R | AB-40RVC | AB-50R AB-50RV | AB-50LRVC | AB-80R AB-80RV | AB-100R AB-100RV | AB-150R | AB-200R | AB-250R | AB-300R | AB-400R |
|---|---|---|---|---|---|---|---|---|---|---|---|---|
| Radial rigidity | (N/μm) | 12.7 | 24.5 | 24.5 | 49.0 | 34.3 | 55.9 | 98.0 | 166.6 | 205.8 | 392.0 | 333.2 |
| | (kgf/μm) | 1.3 | 2.5 | 2.5 | 5.0 | 3.5 | 5.7 | 10.0 | 17.0 | 21.0 | 40.0 | 34.0 |
| Axial rigidity | (N/μm) | 19.6 | 27.4 | 35.3 | 35.3 | 205.8 | 323.4 | 558.6 | 705.6 | 1176.0 | 1234.8 | 1705.2 |
| | (kgf/μm) | 2.0 | 2.8 | 3.6 | 3.6 | 21.0 | 33.0 | 57.0 | 72.0 | 120.0 | 126.0 | 174.0 |
| Normal radial load | (N) | 25.5 | 36.8 | 49.0 | 98.0 | 68.6 | 111.7 | 196.0 | 333.2 | 411.6 | 784.0 | 666.4 |
| | (kgf) | 2.6 | 3.8 | 5.0 | 10.0 | 7.0 | 11.4 | 20.0 | 34.0 | 42.0 | 80.0 | 68.0 |
| Max radial load | (N) | 32.3 | 49.0 | 61.7 | 122.5 | 86.2 | 140.1 | 245.0 | 421.4 | 519.4 | 980.0 | 833.0 |
| | (kgf) | 3.3 | 5.0 | 6.3 | 12.3 | 8.8 | 14.3 | 25.0 | 43.0 | 53.0 | 100.0 | 85.0 |
| Normal axial load | (N) | 39.2 | 41.1 | 70.6 | 70.6 | 411.6 | 646.8 | 1117.2 | 1411.2 | 2352.0 | 2469.6 | 3410.4 |
| | (kgf) | 4.0 | 4.2 | 7.2 | 7.2 | 42.0 | 66.0 | 114.0 | 144.0 | 240.0 | 252.0 | 348.0 |
| Max axial load | (N) | 49.0 | 49.0 | 88.2 | 88.2 | 519.4 | 813.4 | 1401.4 | 1764.0 | 2940.0 | 3087.0 | 4263.0 |
| | (kgf) | 5.0 | 5.0 | 9.0 | 9.0 | 53.0 | 83.0 | 143.0 | 180.0 | 300.0 | 315.0 | 435.0 |
| Radial rotation accuracy | (μm) | 0.07 | 0.07 | 0.05 | 0.05 | 0.05 | 0.05 | 0.05 | 0.05 | 0.05 | 0.05 | 0.09 |
| Axial rotation accuracy | (μm) | 0.04 | 0.05 | 0.03 | 0.03 | 0.03 | 0.03 | 0.03 | 0.03 | 0.03 | 0.05 | 0.05 |
| Max rotation speed | ($S^{-1}$) | 500.0 | 400.0 | 333.3 | 366.7 | 250.0 | 166.7 | 83.3 | 50.0 | 41.7 | 25.0 | 8.3 |
| | (rpm) | 30,000 | 24,000 | 20,000 | 22,000 | 15,000 | 10,000 | 5,000 | 3,000 | 2,500 | 1,500 | 500 |
| Air consumption | ℓ/min (0˚C,101.3kpa) | 4 | 5 | 6 | 12 | 8 | 10 | 15 | 20 | 35 | 40 | 40 |
| Rotor I | ($kg \cdot m^2$) | $1.23X10^{-5}$ | $0.85X10^{-4}$ | $1.925X10^{-4}$ | $1.925X10^{-4}$ | $1.32X10^{-3}$ | $4.85X10^{-3}$ | $2.975X10^{-2}$ | $6.0X10^{-2}$ | 0.2775 | 0.63 | 1.3025 |
| GD² | ($kgf \cdot m^2$) | $4.92X10^{-5}$ | $3.4X10^{-4}$ | $7.7X10^{-4}$ | $9.9X10^{-4}$ | $5.28X10^{-3}$ | $1.94X10^{-2}$ | $1.19X10^{-1}$ | $2.40X10^{-1}$ | 1.11 | 2.52 | 5.21 |
| Weight | (kg) | 0.3 | 1.0 | 1.5 | 2.3 | 3.9 | 8.5 | 22 | 39 | 77 | 110 | 153 |

## EXTERNAL DIMENSIONS

**■Canon Air Bearing R-series**

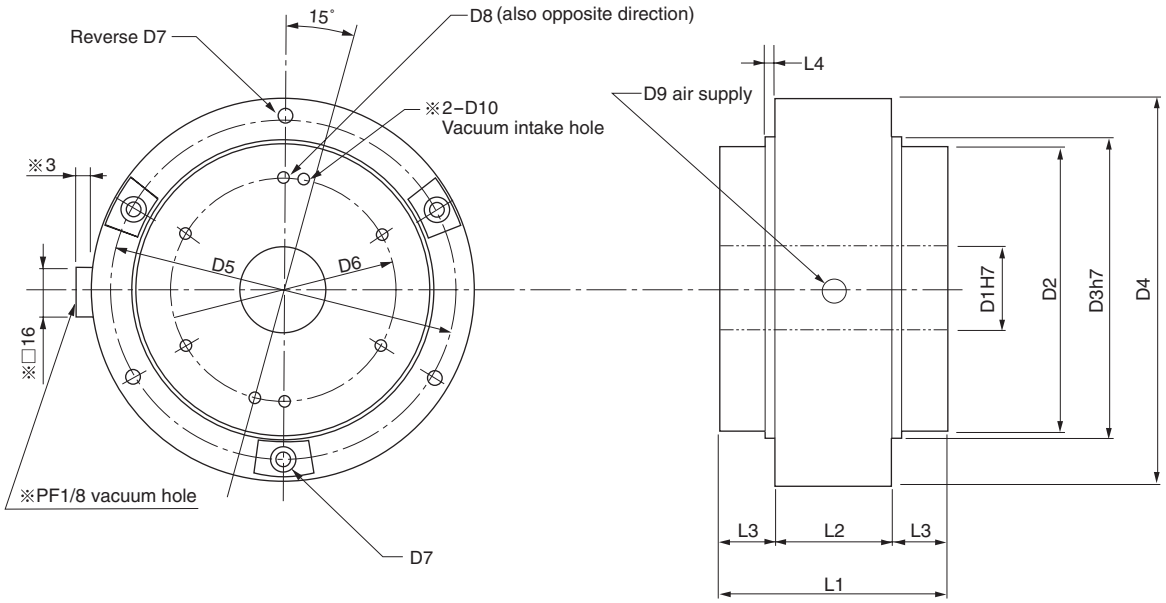


| | 80R | 100R | 150R | 200R | 250R | 300R | *80RV | *100RV |
|---|---|---|---|---|---|---|---|---|
| D1 | ø20 | ø30 | ø50 | ø70 | ø82.55 | ø150** | ø20 | ø30 |
| D2 | ø80 | ø105 | ø155 | ø195 | ø247.6 | ø300 | ø80 | ø105 |
| D3 | ø84 | ø110 | ø160 | ø200 | ø255 | ø305 | ø84 | ø110 |
| D4 | ø110 | ø140 | ø200 | ø240 | ø300 | ø350 | ø110 | ø140 |
| D5 | 96 | 125 | 180 | 220 | 275 | 325 | 96 | 125 |
| D6 | 60 | 75 | 120 | 150 | 190.5 | 250 | 60 | 75 |
| D7 | 2X3-M6 stop facing 8 depth 24 | 2X3-M8 stop facing 11 depth 38 | 2X3-M10 stop facing 15 depth 47 | 2X3-M10 stop facing 15 depth 61 | 2X6-M10 stop facing 15 depth 60 | 2X6-M10 stop facing 15 depth 75 | 2X3-M6 stop facing 8 depth 24 | 2X3-M8 stop facing 11 depth 38 |
| D8 | 2X6-M4 depth 12 | 2X6-M5 depth 18 | 2X6-M6 depth 20 | 2X6-M6 depth 20 | 2X12-M8 depth 20 | 2X12-M8 depth 18 | 2X6-M4 depth 12 | 2X6-M5 depth 18 |
| D9 | PF1/8 | PF1/8 | PF1/8 | PF1/8 | PF1/8 | PF1/4 | PF1/8 | PF1/8 |
| D10 | - | - | - | - | - | - | ø2.7 | ø4.4 |
| L1 | 80 | 106 | 130 | 160 | 170 | 240 | 80 | 106 |
| L2 | 36 | 50 | 60 | 74 | 76 | 90 | 36 | 50 |
| L3 | 22 | 28 | 35 | 43 | 47 | 75 | 22 | 28 |
| L4 | 2.5 | 3.0 | 3.0 | 3.0 | 3.8 | 30.0 | 2.5 | 3.0 |

Note 1: * Vacuum intake type; 80RV, 100RV
Note 2: ** ø150 is 19mm from both ends. Inside is ø120.

■AB-30R

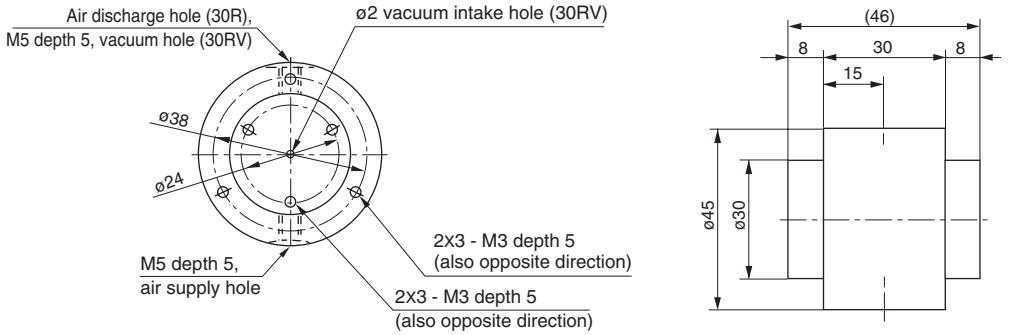


■AB-40RVC

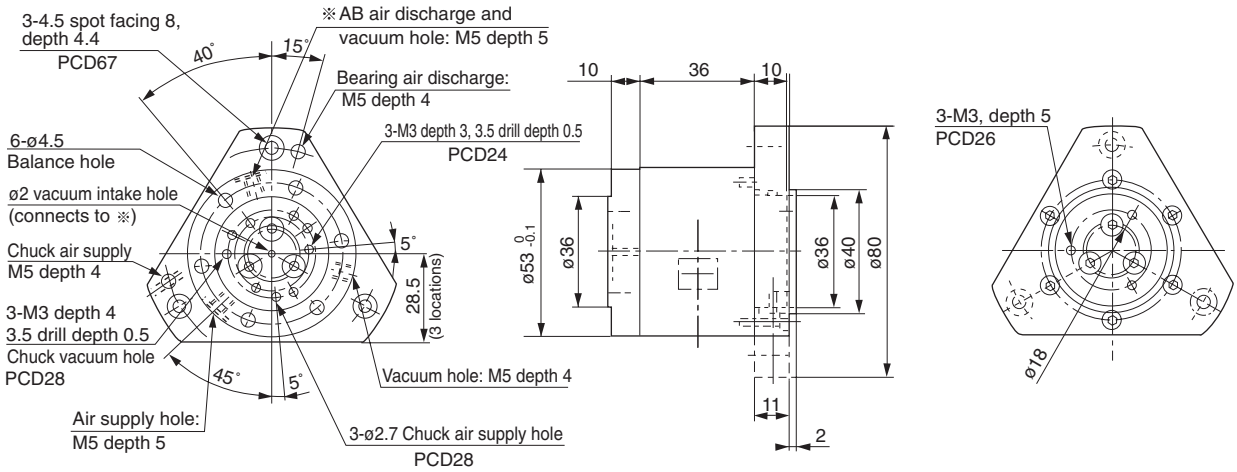


■AB-50R/AB-50RV

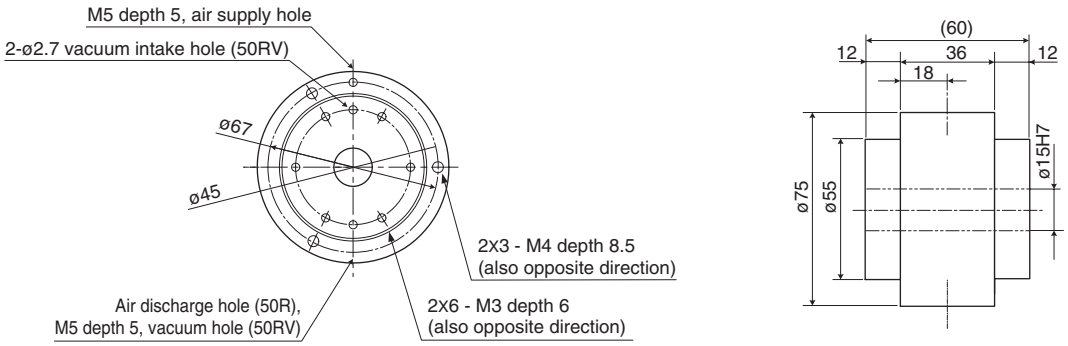

## ■AB-50LRVC

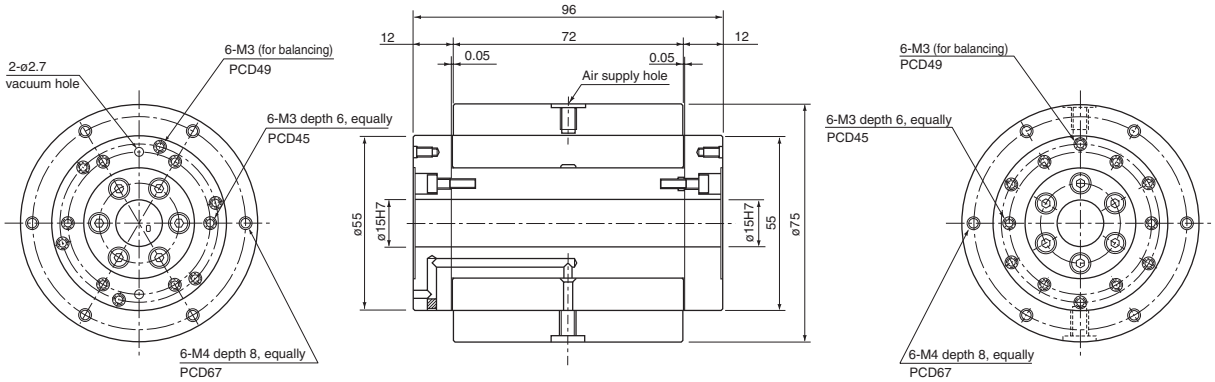


## ■AB-80R

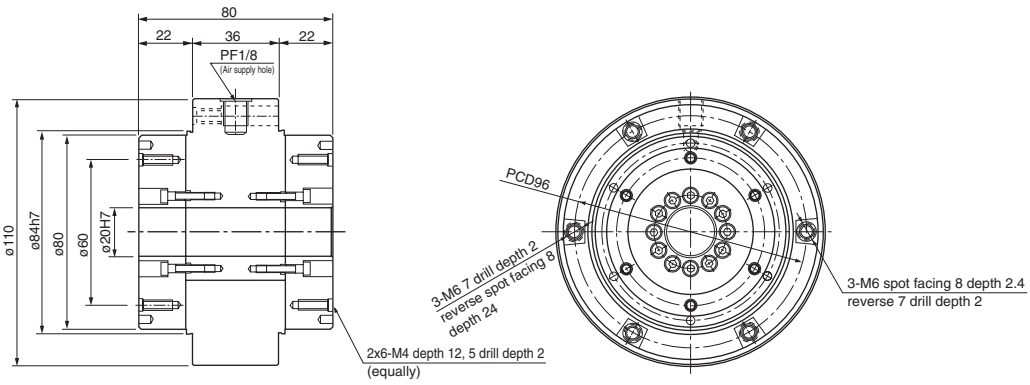


## ■AB-400R

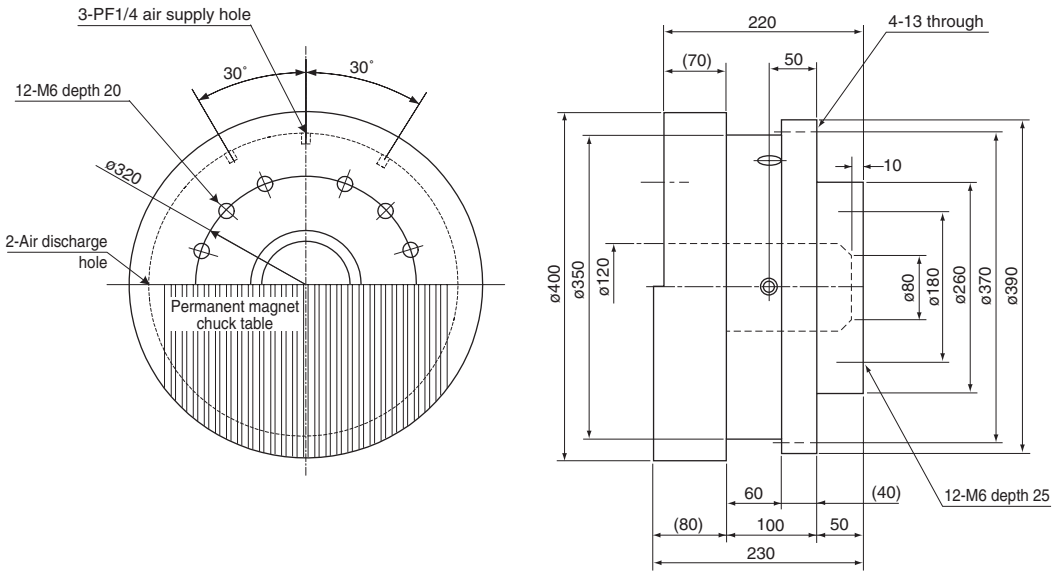

# Inspection Method

## 《Rigidity measurement》

Pressure is applied to the rotor in the cylinder and displacement is measured at the opposite side with an electric micrometer.

### ■Radial rigidity

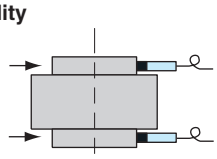

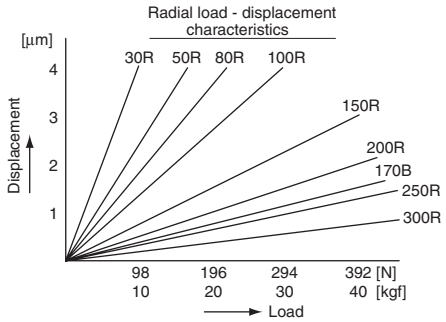


### ■Axial rigidity

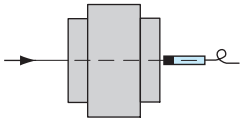

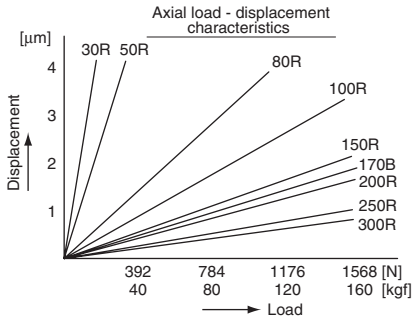


## 《Rotational precision measurement》

Measure the Lissajous' using a glass spherical gauge (precision 0.012μm). Precision includes the spherical gauge.

### ■Radial rotational precision

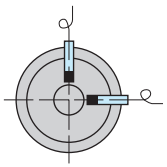

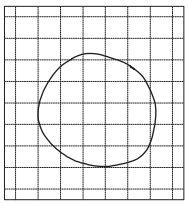

(0.06μm/div)

### ■Axial rotational precision

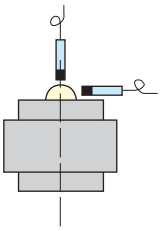

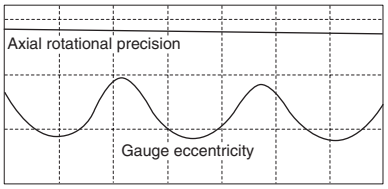


(0.125μm/div)

## 《Edge runout precision measurement》

Displacement is measured with an electric micrometer at a location at the fixed distance from the center of the thrust plate.

Standard edge runout precision is 1μm or less. Edge runout precision of 0.3μm or less is an optional specification.

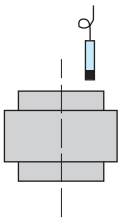

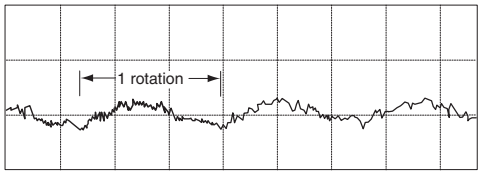


(0.125μm/div)

# Air Bearing Spindle Motor

## Optimized for disk production, inspection

- **Compact, keeping high accuracy rotation of air bearing by using built-in motor.**
- **Adopted DC brushless motor, realized low generation of heat, high precision rotation.**
- **Smooth rotation with very few cogging by using coreless motor.**

## APPLICATION EXAMPLES

●for Measurement

Spinstand for HDD, Spinstand for optical disk, Polygon mirror inspection

●for Processing

Grinding machine, cutting machine, Main axial of machine tool

●Other

High precision rotary table, θ-table

## SPECIFICATIONS TABLE

| Model | SP-3611AB2 | SP-5011AB2 | SP-5083KLM | SP-250M10 |
|---|---|---|---|---|
| Bearing type | Canon Air Bearing AB36RV | Canon Air Bearing AB50RV | Canon Air Bearing AB50LRV | Canon Air Bearing AB250R |
| Rotation speed | Max 15,000rpm | Max 22,000rpm | Max 10,000rpm | 500~2,500rpm |
| Encoder pulse | 2,048 | 2,048 | 83,328 | 1,024 |
| Jitter | 0.001% or less | 0.001% or less | 0.001% or less | ±0.01% or less |
| Ramp up time | 1.5sec or less (0~8,000) (3.5"HD) | 16sec or less (0~20,000) (no load) | 8sec or less (0~10,000) (no load) | 30sec or less (0~2,500) (no load) |
| Ramp down time | 1.5sec or less (8,000~0) (3.5"HD) | 16sec or less (20,000~0) (no load) | 7sec or less (10,000~0) (no load) | 30sec or less (2,500~0) (no load) |
| Dimension | ø54x142 mm | ø75x176 mm | ø75x211 mm | ø378x490 mm |
| Voltage | DC24V±5% | DC24V±5% | DC24V±5% | 3 phase AC200V±10% |
| Current | 10A (max) | 10A (max) | 10A (max) | 75A (max) |
| Motor type | Coreless DC servo motor | Coreless DC servo motor | Coreless DC servo motor | Synchronized AC servo motor |
| Torque constant | 0.010Nm/A (100gfcm/A)±10% | 0.0009Nm/A (86gfcm/A)±10% | 0.0011Nm/A (115gfcm/A)±10% | 24.3Nm/A (248kgfcm/A)±10% |
| Thrust permission load | 41.1N (4.2kgf) or over | 70.6N (7.2kgf) or over | 70.6N (7.2kgf) or over | 2352.0N (240.0kgf) or over |
| Air consumption | 6 N ℓ /min or less | 6 N ℓ /min or less | 6 N ℓ /min or less | 35 N ℓ /min or less |
| Compressed air | 490kpa | 490kpa | 490kpa | 490kpa |
| Weight | 1.5kg | 3.5kg | 5.4kg | 140.0kg |

## EXTERNAL DIMENSIONS

### ■SP-3611AB2

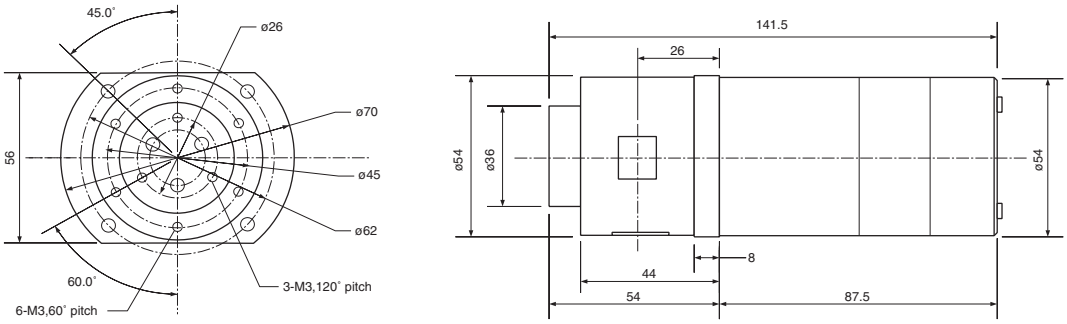


### ■SP-5011AB2

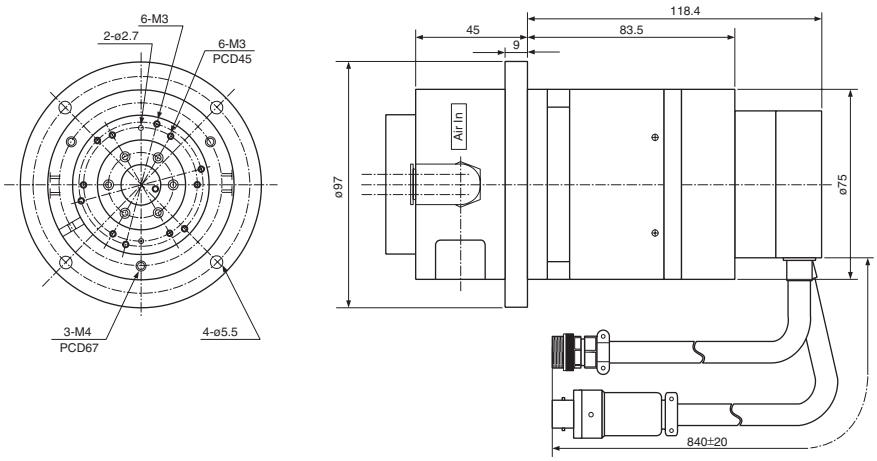


### ■SP-5083KLM

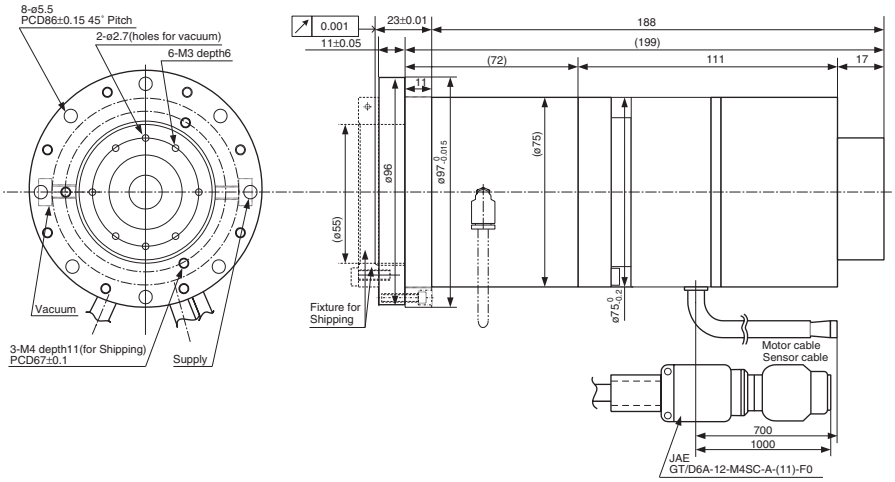


### ■SP-250M10